OPERATING AND SERVICE MANUAL

5065A
RUBIDIUM VAPOR FREQUENCY STANDARD



HEWLETT PACKARD

Reproduced with Permission, courtesy of Agilent Technologies, Inc.
PDF produced 15 September 2009 by Brian Kirby - KD4FM
NOT FOR RESALE

SAFETY

This product has been designed and tested according to International Safety Requirements. To ensure safe operation and to keep the product safe, the information, cautions, and warnings in this manual must be heeded. Refer to Section I for general safety considerations applicable to this product.

CERTIFICATION

Hewlett-Packard Company certifies that this product met its published specifications at the time of shipment from the factory. Hewlett-Packard further certifies that its calibration measurements are traceable to the United States National Bureau of Standards, to the extent allowed by the Bureau's calibration facility, and to the calibration facilities of other International Standards Organization members.

WARRANTY

This Hewlett-Packard product is warranted against defects in material and workmanship for a period of one year from date of shipment, except that in the case of certain components listed in Table 1-3 of this manual, the warranty shall be for the specified period. During the warranty period, Hewlett-Packard Company will, at its option, either repair or replace products which prove to be defective.

For warranty service or repair, this product must be returned to a service facility designated by HP. However, warranty service for products installed by HP and certain other products designated by HP will be performed at Buyer's facility at no charge within the HP service travel area. Outside HP service travel areas, warranty service will be performed at Buyer's facility only upon HP's prior agreement and Buyer shall pay HP's round trip travel expenses.

For products returned to HP for warranty service, Buyer shall prepay shipping charges to HP and HP shall pay shipping charges to return the product to Buyer. However, Buyer shall pay all shipping charges, duties, and taxes for products returned to HP from another country.

LIMITATION OF WARRANTY

The foregoing warranty shall not apply to defects resulting from improper or inadequate maintenance by Buyer, Buyer-supplied software or interfacing, unauthorized modification or misuse, operation outside of the environmental specifications for the product, or improper site preparation or maintenance.

NO OTHER WARRANTY IS EXPRESSED OR IMPLIED. HP SPECIFICALLY DISCLAIMS THE IMPLIED WARRANTIES OF MERCHANTABILITY AND FITNESS FOR A PARTICULAR PURPOSE.

EXCLUSIVE REMEDIES

THE REMEDIES PROVIDED HEREIN ARE BUYER'S SOLE AND EXCLUSIVE REMEDIES. HP SHALL NOT BE LIABLE FOR ANY DIRECT, INDIRECT, SPECIAL, INCIDENTAL, OR CONSEQUENTIAL DAMAGES, WHETHER BASED ON CONTRACT, TORT, OR ANY OTHER LEGAL THEORY.

ASSISTANCE

Product maintenance agreements and other customer assistance agreements are available for Hewlett-Packard products.

For any assistance, contact your nearest Hewlett-Packard Sales and Service Office. Addresses are provided at the back of this manual.

RUBIDIUM VAPOR FREQUENCY STANDARD

5065A

SERIAL PREFIX: 1908A

This manual applies directly to HP Model 5065A Rubidium Vapor Frequency Standards having serial prefix 1908A.

OLDER INSTRUMENTS

Changes required to backdate this manual for older instruments are in Section VII.

OPTIONS

For instruments having Options 001, 002, or 003, refer to Sections III through VII.

Copyright HEWLETT-PACKARD 1979
5301 STEVENS CREEK BLVD., SANTA CLARA, CALIF. 95050

Manual Part No. 05065-9041
Microfiche Part No. 05065-9042

Printed: NOV 1979

HEWLETT PACKARD

MANUAL CONTENTS

This manual is supplied to help you make best use of your instrument. The manual covers eight sections of information as follows:

Section I is an introduction to the Instrument. Electrical specifications and accessories information is given.

Section II covers inspections, power, mounting, packing, shipping, and connection.

Section III outlines operating procedures.

Section IV discusses technical operations.

Section V contrains disassembly and repair procedures and an in-cabinet performance check.

Section VI lists replaceable parts.

Section VII gives options and manual changes information.

Section VIII contains circuit diagrams, component locators and waveforms. Included are adjustment procedures and troubleshooting information.

HOW TO ORDER

To order an operating and service manual, contact the nearest Hewlett-Packard Sales and Service Office. Give complete model, name, and nine-digit serial number. The serial number plate is on the rear panel. Comments on this manual are welcome at any Sales and Service Office.

TABLE OF CONTENTS

Section		Page
I	GENERAL INFORMATION	1-1
	1-1. Introduction	1-1
	1-2. Description	1-1
	1-5. Options	1-1
	1-6. Circuit Checks and Outputs	1-1
	1-8. Terminology	1-1
	1-10. Specifications	1-1
	1-13. Instrument Identification	1-1
II	INSTALLATION	2-1
	2-1. Unpacking and Inspection	2-1
	2-3. Storage and Shipment	2-1
	2-4. Environment	2-1
	2-6. Extended Storage	2-1
	2-8. RVFR Storage Procedure	2-1
	2-10. Packaging	2-1
	2-14. Electrical Connections	2-2
	2-15. Power Connection	2-2
	2-18. Mating Connectors	2-2
	2-20. Operation as Bench or Rack Instrument	2-3
	2-22. Installation Location	2-3
III	OPERATION	3-1
	3-1. Introduction	3-1
	3-3. Options 001 and 002 (Option 003 = 001 and 002)	3-1
	3-5. Operating Procedure	3-1
	3-6. General	3-1
	3-8. Turn-On Procedure (see Figure 3-2)	3-1
	3-9. Turn-On After Long Storage	3-1
	3-10. Frequency Offset and Calibration	3-2
	3-18. Frequency Comparison Using K34-59991A Linear Phase Detector	3-5
	3-19. Operation with Time Standard Option 001 (or 003)	3-9
	3-22. Setting the Clock Phase to an External Clock	3-9
	3-24. Automatic Synchronization	3-9
	3-26. Manual Synchronization	3-9
	3-28. Setting the Clock	3-9
	3-29. Operation with Standby Power Supply Option 002	3-11
IV	THEORY OF OPERATION	4-1
	4-1. Theory	4-1
	4-2. General	4-1
	4-15. Option 001, Time Standard	4-2
	4-20. Option 002, Standby Power Supply	4-3
V	MAINTENANCE	5-1
	5-1. Introduction	5-1
	5-5. Instrument Access	5-1
	5-7. Periodic Maintenance	5-1
	5-8. Instrument Troubleshooting	5-6
	5-9. Introduction	5-6
	5-15. Fault Finding	5-7
	5-19. Loop Alignment Procedure	5-12
	5-20. Introduction	5-12
	5-22. +20 Volt Adjustment (A15 Power Supply and Regulator Assembly)	5-12
	5-24. A10 Frequency Adjustment	5-12
	5-25. RF Alignment	5-13
	5-26. Signal-to-Noise Ratio	5-14
	5-27. Modulation Frequency Adjustment	5-14
	5-28. Phase Adjustment Recheck	5-14

TABLE OF CONTENTS (Continued)

Section		Page
	5-29. Phase Detector and Integrator Zero Adjustment	5-15
	5-30. Loop Gain Adjustment	5-15
	5-31. Loop Assembly (A14) Alignment	5-15
	5-32. Option 002, Standby Power Supply Maintenance	5-16
	5-37. Battery Removal and Replacement	5-16
	5-38. Clock Display Assembly A19	5-16
VI	REPLACEABLE PARTS	6-1
	6-1. Introduction	6-1
	6-4. Ordering Information	6-1
VII	MANUAL CHANGES AND OPTIONS	7-1
	7-1. Manual Changes	7-1
	7-3. Newer Instruments	7-1
	7-5. Older Instruments	7-1
	7-7. Options	7-1
	7-9. Option 001 Time Standard	7-1
VIII	CIRCUIT DIAGRAMS	8-1
	8-1. General	8-1

LIST OF FIGURES

Figure		Page
1-1.	Model 5065A and Accessories	1-0
2-1.	Electrical Hookup for RVFR Storage	2-2
2-2.	Conversion for Rack Mounting	2-3
3-1.	RVFR Pumping	3-2
3-2.	Turn-On Procedure	3-3
3-3.	Magnetic Field Control	3-5
3-4.	Error Measurement	3-5
3-5.	Equipment Setup for Calibrating Phase Measurement System	3-7
3-6.	Equipment Setup for Frequency Difference Measurement	3-8
3-7.	Internal Measurement with Automatic Synchronization	3-12
3-8.	Internal Measurement with Manual Synchronization	3-12
3-9.	Front Panel Controls	3-13
3-10.	Rear Panel Operating Controls	3-14
3-11.	Top Operating Controls	3-15
4-1.	Rubidium Absorption Plot	4-1
4-2.	Rb^{87} Absorption Cell Output	4-2
4-3.	RVFR Assembly Block Diagram	4-3
5-1.	A8TP3 Waveform at 200×10^{-10} and Phase Misadjusted	5-2
5-2.	A8TP3 Waveform at 200×10^{-10} and Phase Correct	5-2
5-3.	Harmonic and Non-Harmonic Distortion Test Setup	5-3
5-4.	Equipment Setup for Synchronization and Delay Checks	5-4
5-5.	5 MHz Output Stability Test Setup	5-5
5-6.	5065A Simplified Block Diagram	5-7
5-7.	Meter Response in ERROR Position	5-10
5-8.	Waveform at A8TP3 with Severe Phase Shift	5-12
5-9.	R.F. Alignment Setup	5-13
5-10.	Oscilloscope Indication at Resonance with A8R43 (Modulating Phase Adjustment) Correctly Adjusted	5-13
5-11.	Signal-to-Noise Test Setup	5-14
6-1.	Modular Cabinet Parts	6-2

LIST OF FIGURES (Continued)

Figure		Page
7-1.	Battery Charger Assembly A2 Option 002	7-3
7-2.	A2 Battery Charger Assembly	7-3
7-3.	100 kHz Regenerative Divider	7-8
7-4.	A4 100 kHz Divider	7-11
7-5.	A4 100 kHz Frequency Divider Assembly	7-11
7-6.	A1 Waveforms	7-21
7-7.	Synthesizer Assembly A1 Block Diagram	7-21
7-8.	A1 Synthesizer Assembly	7-23
7-9.	Part of A1 Synthesizer Assembly	7-23
7-10.	A1 Waveforms	7-25
7-11.	Synthesizer A1 Phase-Locked Oscillator Section	7-25
7-12.	A7 AC Amplifier Component Locator	7-35
7-13.	A7 AC Amplifier Schematic Diagram	7-35
7-14.	Top Operating Controls	7-37
7-15.	A5 Digital Divider Assembly (Option 001)	7-39
7-16.	A16 Digital Divider Power Supply Assembly	7-41
7-17.	A19 LED Digital Clock Assembly	7-51
7-18.	Top Operating Controls	7-53
7-19.	A5 Digital Divider Assembly	7-55
7-20.	A16 Digital Divider Power Supply Assembly	7-57
8-1.	Schematic Diagram Notes	8-2
8-2.	Block Diagram	8-3
8-3.	Front and Rear Panel and Top Internal Views	8-4
8-4.	Wiring Diagram (Sheet 1 of 3)	8-5
8-5.	Bottom Internal View	8-6
8-6.	Wiring Diagram (Sheet 2 of 3)	8-7
8-7.	Wiring Diagram (Sheet 3 of 3)	8-9
8-8.	Synthesizer Assembly A1 Block Diagram Digital Section	8-11
8-9.	Synthesizer Assembly A1 Digital Section (Sheet 1 of 2)	8-17
8-9.	Synthesizer Assembly A1 Phase-Locked Oscillator Section (Sheet 2 of 2)	8-19
8-10.	A2 Battery Charge Assembly (Option 002 and 003)	8-21
8-11.	A3 Multiplier Assembly	8-25
8-12.	A4 100 kHz Frequency Divider	8-27
8-13.	A5 Digital Divider Assembly (Option 001) (Sheet 1 of 3)	8-33
8-14.	A5A2 Master Clock Board (Option 001) (Sheet 2 of 3)	8-35
8-15.	A5A3 Preset Clock Board (Option 001) (Sheet 3 of 3)	8-37
8-16.	A6 1 MHz Frequency Divider Assembly	8-41
8-17.	A7 AC Amplifier Assembly	8-43
8-18.	A8 Phase Detector Assembly	8-47
8-19.	A9 Integrator Assembly	8-49
8-20.	A10 Oscillator Assembly Block Diagram	8-53
8-21.	A11 RVFR Temperature Controller Assembly	8-55
8-22.	A12 RVFR Assembly and Buffer A13 Amplifier Assembly	8-59
8-23.	A14 Logic Assembly	8-63
8-24.	A15 Power Supply and Regulator Assembly	8-65
8-25.	A16 Digital Divider Power Supply Assembly	8-67
8-26.	A19 Series 1740 Digital Clock Schematic Diagram	8-71

LIST OF TABLES

Table		Page
1-1.	Equipment Supplied	1-2
1-2.	Accessories Available	1-2
1-3.	Specifications	1-3
2-1.	115/230 Volt Conversion	2-2
2-2.	Mating Connectors	2-3
3-1.	Operating Checks	3-1
3-2.	Front Panel Lamp Indications	3-4
3-3.	Frequency Offset Change Instructions	3-6
3-4.	Typical Frequency Offset Change, Sample (Insufficient MAGNETIC FIELD Control)	3-7
3-5.	Typical Frequency Offset Change, 0×10^{-10} Offset to -300×10^{-10}	3-8
3-6.	Offset Frequency Settings	3-10
3-7.	Synthesizer Setting vs. Frequency Offset	3-11
3-8.	Recommended Test Equipment	3-11
4-1.	Logic Signals	4-3
5-1.	Assembly Designations	5-1
5-2.	In-Cabinet Performance Check	5-2
5-3.	Circuit Checks	5-8
5-4.	Signal Checks	5-10
5-5.	Recommended Test Equipment	5-11
5-6.	A5 Troubleshooting	5-17
6-1.	Table of Abbreviations	6-1
6-2.	Replaceable Parts	6-3
6-3.	Option 002 and 003 Replaceable Parts	6-21
6-4.	Option 001 Replaceable Parts	6-23
6-5.	Options 001, 003 Only Replaceable Parts	6-27
6-6.	Manufacturers Code List	6-31
7-1.	Manual Changes	7-1
7-2.	Battery Charger Replaceable Parts	7-5
7-3.	A4 100 kHz Divider Replaceable Parts	7-13
7-4.	A1 Synthesizer Assembly Replaceable Parts	7-17
7-5.	A1 Troubleshooting	7-26
7-6.	A1 Troubleshooting	7-27
7-7.	A1 Troubleshooting	
7-7.	A1 Troubleshooting	7-28
7-8.	A1 Troubleshooting	7-29
7-9.	A7 AC Amplifier Assembly Replaceable Parts	7-32
7-10.	A16 Resistor Parts List	7-38
7-11.	A16 Resistor Parts List	7-52
7-12.	A5A4 Parts List	7-58

Figure 1-1. Model 5065A and Accessories



Shown with Option 003 (001 + 002 = 003)

AC POWER CORD



RACK MOUNT KIT

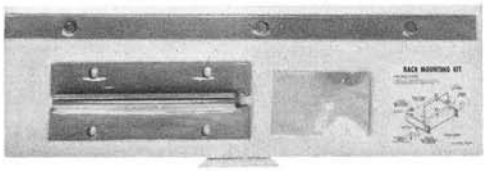

ACCESSORY KIT

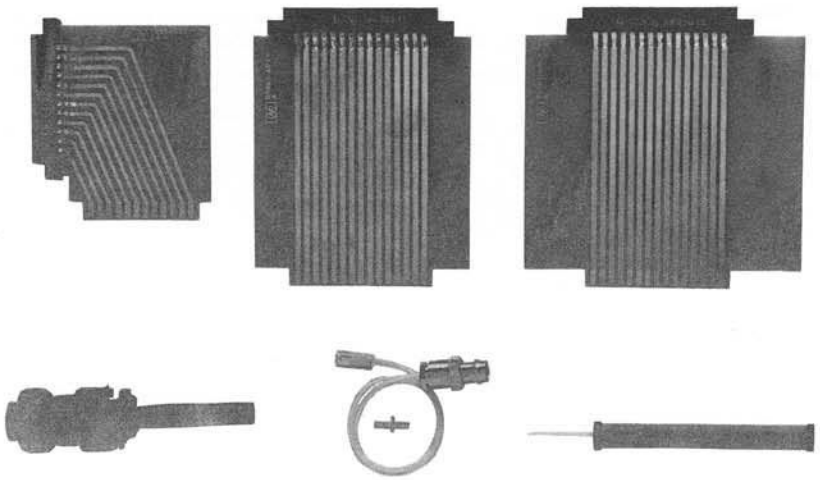

SECTION I

GENERAL INFORMATION

1-1. INTRODUCTION

1-2. Description

1-3. The Hewlett-Packard Model 5065A Rubidium Vapor Frequency Standard is a compact, self-contained secondary frequency standard which uses an optically-pumped Rubidium vapor cell as the reference element. A 5 MHz oscillator is stabilized against a natural atomic resonance, the hyperfine transition of Rubidium 87. This technique produces a long-term stability of better than 1×10^{-11} per month with excellent short-term stability which is conservatively rated at less than 5×10^{-12} rms averaged over a one-second period. Output frequencies are 5 MHz, 1 MHz, and 100 kHz.

1-4. Frequency setting for any offset of the UTC time reference is accomplished by changing the microwave excitation frequency and the magnetic field applied to an Rb^{87} vapor cell. Thumbwheel switch control (of a digital frequency synthesizer) provides approximate step adjustment of the microwave excitation frequency with a range of 1000 parts in 10^{10}. In addition, the front-panel MAGNETIC FIELD control provides for exact adjustment of the Rb^{87} hyperfine transition with a resolution of 2 parts in 10^{12}.

1-5. Options

a. A digital clock, Option 001, provides a clock display and a one pulse per second (1 PPS) electrical output. The clock pulse may be retarded up to 1-second in increments as small as 1-microsecond and as large as 0.1-second. In addition, a separate control provides continuous adjustment of clock-pulse delay from 0- to 1-microsecond.

b. Standby battery, Option 002, provides a 10-minute minimum power source (at 25°C) in the event of external ac power failure. A front-panel lamp flashes when ac power is interrupted and lights continuously during fast charge. Charge rate is controlled by a 3-position front-panel switch; FAST, CHARGE-FLOAT, RESET.

1-6. Circuit Checks and Outputs

1-7. The CIRCUIT CHECK switch and meter provide continuous monitoring of outputs and other signals. The CONTINUOUS OPERATION lamp gives an indication of correct operation. The 5 MHz, 1 MHz, and 100 kHz output levels are at least 1 volt rms when properly terminated with 50 ohms.

1-8. TERMINOLOGY

1-9. The definitions of the following terms apply to these terms as used throughout this manual.

a. ATOMIC TIME. Time scale based on the hyperfine resonance of Cesium 133.

b. UNIVERSAL TIME (UT2). Time scale based on the earth's rotation about its axis with correction for angular position and seasonal variations; proceeds at a rate slightly slower than Atomic time.

c. UNIVERSAL TIME (COORDINATED) (UTC). A piecewise uniform scale which approximates UT2 to 0.1-second by step adjustments in phase as announced by the Bureau International de l'Heure in Paris.

d. HYPERFINE RESONANCE OF Rb^{87}. Hyperfine resonant frequency arising from the difference in energy between the upper and lower ground states of Rb^{87}.

e. RVFR (Rubidium Vapor Frequency Reference). The assembly which houses the Rb^{87} lamp, filter cell, the Rb^{87} absorption cell, and the harmonic generator/mixer diode.

1-10. SPECIFICATIONS

1-11. Table 1-3 lists the technical specifications for the Model 5065A.

1-12. Table 1-1 lists equipment supplied and Table 1-2 lists accessories available for the Model 5065A.

1-13. INSTRUMENT IDENTIFICATION

1-14. Hewlett-Packard uses a two-section nine-digit serial number (0000A00000) mounted on the rear-panel to identify this instrument. The first four digits are the serial prefix and the last five digits refer to the specific instrument. If the serial prefix on your instrument differs from that listed on the title page of this manual, differences exist between the manual and your instrument. Lower serial prefixes are documented in Section VII and higher serial prefixes are covered by a manual change sheet included with the manual. If this sheet is missing contact the nearest Hewlett-Packard Sales and Service office (lists are provided at the rear of this manual).

Table 1-1. Equipment Supplied

Equipment	Description	HP Part No.
AC Power Cable	3-Conductor with ground pin	05061-6091
Accessory Kit includes:		05065-6066
Adapter	Micon, male-to-male	1250-0813
Connector	Plug, female	1251-0126
Screwdriver	Ceramic	8710-0033
Cable Assembly Test	Micon to BNC	05060-6116
Board Extender	15 pin	05065-6064
Board Extender	15 pin, extra wide	05065-6065
Board Extender	12 pin	05061-6073

Table 1-2. Accessories Available

Accessory	Description	HP Part No.
Standby Power Supply	24 Vdc, 2-ampere supply with 18 ampere-hours standby batteries	Model 5085A
Cable	Connects 5065A to 5085A dc output	103A-16A
Extension Slides and Rack	Permits sliding instrument out and tilting from rack-mounted position	1490-0718 1490-0721
Standby Power Supply	24 Vdc, 2-ampere supply with 12 ampere-hours sealed standby batteries for flying clock experiments. Operates on 6, 12, and 24 Vdc, 115 Vac/230 Vac, ±10%, 48 to 440 Hz.	K02-5060A
Rack Mount Kit	Provides conversion from bench to rack model	5060-8740

Table 1-3. Specifications

5065A

Frequency Stability:

Long term: $\pm 1 \times 10^{-11}$ per month (maximum limit of drift rate).

Short term*: for 5 MHz output.

Fractional Frequency Fluctuations	Avg. Time (τ)
$<7.5 \times 10^{-10}$	1 ms
$<1.5 \times 10^{-10}$	10 ms
$<1.5 \times 10^{-11}$	0.1 s
$< 5 \times 10^{-12}$	1 s
$<1.6 \times 10^{-12}$	10 s
$< 5 \times 10^{-13}$	100 s
$< 5 \times 10^{-13}$	1000 s

Calibration Accuracy: Set at factory to $\pm 1 \times 10^{-11}$ of specified time scale.

Settability: $\pm 2 \times 10^{-12}$.

Time Scale: Set at factory to UTC unless specified differently.

Tunability: Coarse Frequency Synthesizer Adjustment: Range: 1000×10^{-10}
Resolution: $<2 \times 10^{-9}$, thumbwheel adjust.
Fine Frequency Magnetic Field Adjustment:
Range: 2×10^{-9} Resolution: 2×10^{-12}

Warm-up: Within 1×10^{-10} in 1 hour and 5×10^{-11} in 4 hours of final frequency after 24 hours "off" time at 25° C. Units typically warm-up to better than ±2 parts in 10^{11} of factory calibrated frequency.

***DEFINITION OF TERMS**

Short-Term Stability:

See Statistics of Atomic Frequency Standards by David W. Allen, Proceedings of IEEE, Feb. 1966, p. 221, and HP Application Note 116 for measurement details.

Settability:

The degree to which an oscillator may be adjusted to correspond with a reference. This is also termed calibration.

OUTPUTS:

Frequencies: 5 MHz, 1 MHz, 100 kHz.
Voltages Levels: >1 V rms into 50 ohms at 5 MHz, 1 MHz, 100 kHz.
Connectors: BNC Front and Rear for 5 MHz, 1 MHz, 100 kHz.
Harmonic Distortion: (5 MHz, 1 MHz, 100 kHz) Down more than 40 dB from rated output.
Nonharmonically Related Output: (5 MHz, 1 MHz, 100 kHz) Down more than 80 dB from rated output.
Signal-to-Noise Ratio: For 1 and 5 MHz, >87 dB at rated output (in a 30 kHz noise bw).

ENVIRONMENTAL:

Temperature, Operating: 0° to 50° C. Frequency change is $<\pm 4 \times 10^{-11}$ from frequency reference at at 25° C.
Temperature, Nonoperating: -40° to +75° C. (With Options to 50° C.)
Production Units Have Passed Type Test as Follows:
HUMIDITY: 0 to 95% relative humidity.
VIBRATION: MIL-STD-167 and MIL-E-5400, CURVE I, with isolators.
SHOCK: MIL-T-21200, and MIL-E-5400 (30 G's).
ELECTROMAGNETIC COMPATIBILITY (EMC): MIL-I-6181D and MIL-STD-461, Class A.
ALTITUDE: Frequency change is $>5 \times 10^{-11}$ from 0 to 40,000 ft.
FREQUENCY STABILITY DUE TO:
Magnetic Fields: $<5 \times 10^{-12}$ for 1 gauss dc change or 1 gauss peak ac, 60 ±10% Hz and 400 ±10% Hz.
Line Voltage: $<4 \times 10^{-12}$ over specified input range.

MATING CONNECTORS:

EXT DC input: HP 1251-0126 (5-contact), Cannon MS 3106E-14S-5S (Series ME) furnished.

POWER: 115 or 230 Vac ±10%, 50 to 400 Hz, or 23 to 30 Vdc.
Approx. power required:

	24 Vdc	**115 Vac**
Without Options	35 W	49 W
Option 001 (Add)	7.5 W	10 W
Option 002 (Add)	0 W	6 W
Option 003 (Add)	7.5 W	16 W

WEIGHT: Net, 34 lb (15,4 kg). Shipping, 51 lb (23,5 kg). Option 001, add 2 lb (0,9 kg). Option 002, add 3.5 lb (1,6 kg).

WARRANTY: 1 year, except 3 years for RVFR.

Table 1-3. Specifications (Continued)

OPTION 001 TIME STANDARD

CLOCK PULSE:
Rate: 1 pulse per second. **Rise Time:**<50 ns.
Fall Time: <1 μs. **Amplitude:** +10V peak ±10%
Jitter: 5 ns rms are with 50Ω load. **Width:** 20 μs min. All specs **Output:** Front-panel BNC.

SYNCHRONIZATION: Automatic to 10 ±1 μs, delayed from reference input pulse (rear BNC). Manual adj. to ±50 ns. Reference pulse must be>+5 v with a rise time<50 ns and width>0.5 μs.

CLOCK MOVEMENT: 24-hour LED Digital Clock.

OPTION 002 STANDBY POWER SUPPLY

CAPACITY: 10-minute minimum at 25° C after full charge (incl. Option 001).

CHARGE CONTROL: Front panel, Fast Charge-Float-Reset switch.

INDICATOR: A front-panel light flashes when ac power is interrupted and battery is being used. A continuous light indicates a fast charge condition.

OPTION 003

Combines Options 001 and 002

PERFORMANCE OF QUARTZ OSCILLATOR ONLY
(Rubidium Control Loop Open)

AGING RATE: $<\pm 5 \times 10^{-10}$ per 24 hours.

FREQUENCY ADJUSTMENTS:
Fine Adjustment: 5×10^{-8} range, with dial readings of parts in 10^{10}.
Coarse Adjustment: 1 part in 10^6, screwdriver adjustment at front panel.

STABILITY:
As a Function of Ambient Temperature: Frequency change is less thatn 2.5×10^{-9} total from 0° to +50° C.
As a Function of Load: $\pm 2 \times 10^{-11}$ from open circuit to short, 50ΩR, L, or C load change.
As a Function of Supply Voltage: $\pm 5 \times 10^{-11}$ for 23 to 30 Vdc from 26 Vdc reference, or for 115/230 Vac ±10%.

DIMENSIONS:

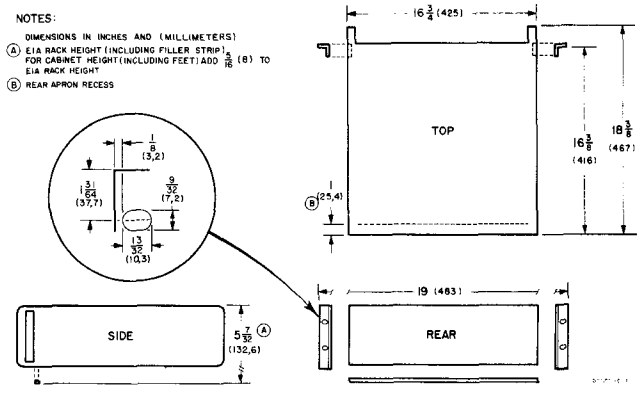

SECTION II

INSTALLATION

2-1. UNPACKING AND INSPECTION

2-2. If the shipping carton is damaged, ask that the carrier's agent be present when the instrument is unpacked. Inspect instrument for damage (scratches, dents, broken knobs, etc.). If instrument is damaged or fails Performance Check, notify the carrier and the nearest Hewlett-Packard Sales and Service office immediately (Sales and Service Offices listed inside back cover). Retain the shipping carton and the padding material for the carrier's inspection. The office will arrange for repair or replacement without waiting for the claim against the carrier to be settled.

2-3. STORAGE AND SHIPMENT

2-4. Environment

2-5. Temperatures during storage and shipment should be limited as follows:

a. Maximum temperature: +75° C (165° F), +50° C (122° F) with Options 001, 002, or 003. Longterm storage +35° C (95° F).

b. Minimum temperature: -40° C (-40° F).

NOTE (Option 002 Only)

When placing the 5065A in storage, remove the top cover and momentarily remove fuse F4 located directly over the battery. Replace the fuse. When ac power is reapplied, the battery will be automatically switched into the circuit.

2-6. Extended Storage

2-7. If the Model 5065A is to be stored for an extended period (longer than 2 months) or if immediate operation is required after storage, then RVFR tube should have power applied to it for the duration of the storage as described in the following procedure.

2-8. RVFR Storage Procedure

a. Remove all power from 5065A and remove bottom cover.

b. Disconnect the red and black twisted pair of wires from XA4(1) and XA8(1) respectively.

c. Obtain a current-limiting power supply capable of producing 100 milliamps (power supply voltage is not important).

d. Before turning on power supply, place a short across its output terminals.

e. Connect the power supply as shown in Figure 2-1. The short should remain in place on the power supply output.

f. Set power supply voltage and current controls to minimum position. The precautions of steps d, e, and f are to prevent the filter capacitor on the power supply output from discharging into the RVFR.

g. Turn on Power Supply and adjust voltage high enough so output current can be set with current-limit control. Read current on power supply meter.

h. Set current-limit control so supply output current is 100 mA.

i. Reduce voltage control setting so that it is just above the point where further reduction would reduce the power supply output current.

j. Recheck polarity of power supply connection to red and black wires. This must be properly connected.

k. Remove short from power supply output to allow current to flow into the RVFR. Adjust power supply voltage and/or current limit to bring current to 100 mA.

l. The power supply should remain connected for the duration of storage.

2-9. When the 5065A is to be operated again:

1. Disconnect the power supply and reconnect RVFR red wire to XA4(1) and the black wire to XA8(1). Check POLARITY.

2. Apply power to the 5065A. Follow turn-on procedure in Section III.

2-10. Packaging

2-11. To protect valuable electronic equipment during storage or shipment always use the best packaging methods available. Your Hewlett-Packard Sales and Service office can provide packing material such as that used for original factory packaging. Contract packaging companies in many cities can provide dependable custom packaging on short notice. Here is a recommended method:

2-12. The original packaging procedure is to:

a. Wrap the instrument in large plastic sheet or bag.

b. Place the wrapped instrument into a "same-size" carton (HP Part No. 9211-1102).

c. When the carton is sealed, install 4 polyurethane foam, post-packs (HP Part No. 9220-1316) on each corner of the carton.

d. Install boxed instrument into the final cardboard outer carton (HP Part No. 9211-1101) seal effectively and label properly.

Figure 2-1. Electrical Hookup for RVFR Storage

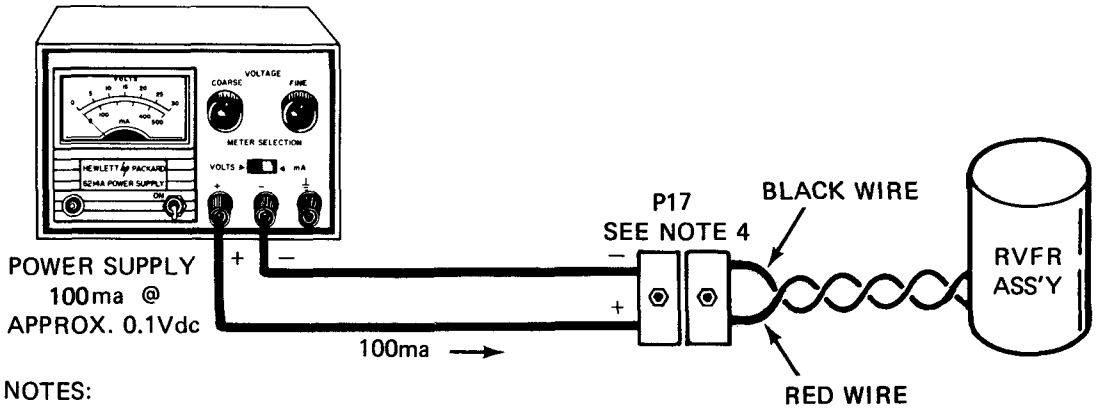

NOTES:

1. Only red and black wires need be connected to power.
2. Be sure polarity is correct: RVFR "red.. wire is positive (+), and "black" is negative.
3. Nominal voltage at red and black wires will be approximately 0.1 VDC.
4. See Note on Figure 3-1.

2-13. Alternate methods which provide effective protection for the instrument can also be used, however, the previously described method is considered the better one.

2-14. ELECTRICAL CONNECTIONS

2-15. Power Connection

CAUTION

The Model 5065A has the negative side of its power supply grounded. When operating with auxiliary equipment such as an external battery or clock, check to ensure that the equipment can be connected together.

2-16. LINE VOLTAGE. The Model 5065A can be operated from either 115- or 230-volt (±10%) ac power lines. A slide switch on the rear panel permits quick conversion for operation from either voltage. Insert a narrow-blade screwdriver in the switch slot and set the switch to expose the correct numbers to correspond to the line voltage used (Table 2-1). The instrument is supplied with a 115-volt fuse; change this fuse for 230-volt operation (Table 2-1).

IMPORTANT

Before connecting ac power to the instrument, be certain slide switch is properly positioned for 115 or 230 volt operation.

Table 2-1. 115/230 Volt Conversion

Conversion	115 Volts	230 Volts
Slide Switch	Right	Left
AC Line Fuse	1A slo-blo	0.5 A slo-blo

2-17. POWER CABLE. The Model 5065A is equipped with a detachable three-conductor power cable. Install as follows:

a. Connect the round, three-conductor female plug to the ac line jack on the instrument rear panel.

b. Connect male plug (two-blade with round grounding pin) to three-conductor (grounded) outlet. Exposed portions of the instrument are grounded through the round pin for safety; when only two-conductor outlets are available, use connector adapter (HP Stock No. 1251-0048) and connect short wire from adapter to a suitable ground.

2-18. Mating Connectors

2-19. Table 2-2 lists the Model 5065A front and rear panel connectors and their respective mating connectors. Not all connectors listed are shipped with the instrument but are included in the table as useful information for installation.

2-20. OPERATION AS BENCH OR RACK INSTRUMENT

2-21. The Model 5065A is shipped from the factory ready for operation as a bench instrument. Parts necessary to convert the instrument for operation as a rack-mounted instrument are not supplied. When orderd separately, Rack Mounting Kit is available by ordering HP Part No. 5060-8740. To convert for rack operation, refer to Figure 2-1 and proceed as follows:

a. Remove feet (press the foot-release button, slide foot forward toward center of instrument, and lift off).

b. Remove adhesive-backed trim strips on sides, just behind front handles.

c. Attach filler strip along bottom edge of front panel.

d. Attach mounting brackets to sides (larger corner notch toward bottom of instrument, see Figure 2-2). Instrument is now ready to mount in standard 19-inch rack.

2-22. INSTALLATION LOCATION

2-23. The Rb^{87} absorption cell in the RVFR Assembly A12 is slightly sensitive to external magnetic fields. Avoid installing this instrument near large motor-generators, transformers, or other equipment which radiate strong magnetic fields of 2 Gauss or more.

Figure 2-2. Conversion for Rack Mounting

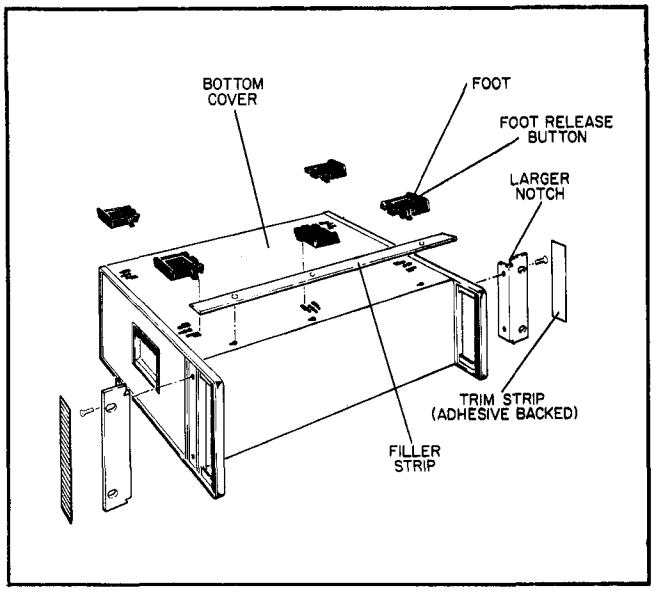

Table 2-2. Mating Connectors

Connector Description	Connector HP Part No.	Mating Connector HP Part No.	Mating Connector Description
Rear BNC Female jack (J1, 2, 3, 4, 5)	1250-0140	1250-0061*	BNC male plug, UG88/U
EXT DC, 5-pin male jack (J9)	1251-0111	1251-0126	5-pin female plug
AC LINE, 3-pin male jack (J8)	1251-1458	1251-2457	3-pin female plug
Front Panel OUTPUT Signal jacks (J10, 11, and 12)	1250-0102	1250-0061*	BNC male plug, UG88/U
1 PPS, BNC jack (J14) Option 001 only	1250-0102	1250-0061*	BNC male plug, UG88/U
*These connectors not shipped with the instrument.			

SECTION III

OPERATION

3-1. INTRODUCTION

3-2. This section provides operating procedures for the 5065A Rubidium Vapor Frequency Standard. Tables 3-1 and 3-2 gives the basic turn-on procedure. Figures 3-9, 3-10, and 3-11 explain front, top, and rear controls and connectors.

3-3. OPTIONS 001 AND 002 (Option 003 = 001 and 002)

3-4. Operating procedures for Option 001 (Time Standard) and Option 002 (Standby Power Supply) are covered in Paragraphs 3-19 through 3-31.

3-5. OPERATING PROCEDURE

3-6. General

3-7. In instruments equipped with Option 002, Standby Power Suply, remember that the internal standby battery is fully discharged when delivered and must be brought to full charge (16 hours minimum) before it can deliver rated standby power. Battery charging instructions are included in Figure 3-2, Turn-On Procedure. For more standby power, available accessories are the HP Model 5085A Standby Power Supply or HP Model K02-5060A Power Supply.

3-8. Turn-On Procedure (see Figure 3-2)

3-9. Turn-On After Long Storage

If the 5065A has been in storage for longer than 2 months, there is a possibility of cell flooding occurring in the RVFR tube. If after 1 hour of warm-up from initial turn-on no 2nd harmonic is present, then cell flooding can be suspected. The following procedure should be used to incorrect cell flooding.

a. Remove all power from 5065A and remove bottom cover.

b. Disconnect the red and black twisted pair of wires from XA4(1) and XA8(1) respectively.

c. Obtain a current-limiting power supply capable of producing 1 amp (power supply voltage is not important).

d. Before turning on power supply, place a short across its output terminals.

e. Connect the power supply as shown in Figure 3-1. The short should remain in place on the power supply output.

f. Set power supply voltage and current controls to minimum position. The precautions of steps d, e, and f are to prevent the filter capacitor on the power supply output from discharging into the RVFR.

Table 3-1. Operating Checks

CIRCUIT CHECKS		
Switch Position	Meter Indication	Description
BATTERY	35-45 Option 002)	Indicates battery voltage
SUPPLY	38 - 42	Indicates +20 volts regulated supply
LAMP OVEN	10 - 45	Indicates power to lamp oven in RVFR
CELL OVEN	10 - 45	Indicates power to absorption cell oven in RVFR
OSC OVEN	25 - 50	Indicates power to quartz OSC oven
PHOTO I	25 - 50	Indicates RVFR output current
5 MHz	35 - 45 (no load)	Indicates 5 MHz output level
CONTROL	-50 to +50	Indicates dc control voltage to quartz oscillator
ERROR	0	Indicates frequency difference between RVFR and microwave field as a dc voltage
2ND HARMONIC	20 - 50	Indicates 2ND HARMONIC level
1 MHz	38 - 42 (no load)	Indicates 1 MHz output level
100 kHz	38 - 42 (no load)	indicates 100 kHz output level

Figure 3-1. RVFR Pumping

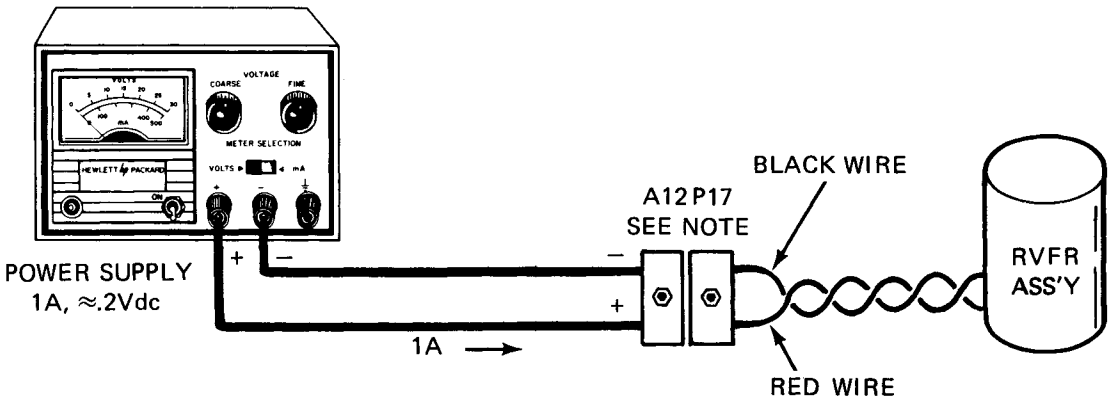

NOTE: Instruments serial number 1732A00791 and above do not have the P17/J17 connector but have the cable soldered. In this case, disconnect the wires and connect directly to the power supply. Mating Connector for P17 is HP Part No. 1251-1113 (Winchester Part No. JF1P-1-SA).

g. Turn on Power Supply and adjust voltage high enough so output current can be set with current-limit control. Read current on power supply meter.

h. Set current-limit control so supply output current is 1A.

i. Reduce voltage control setting so that it is just above the point where further reduction would reduce the power supply output current.

j. Recheck polarity of power supply connection to A12P17. This must be properly connected.

k. Remove short from power supply output to allow current to flow into the RVFR. Adjust power supply voltage and/or current limit to bring current to 1A.

l. Reconnect 5065A to AC line. Set front panel MODE switch to LOOP OPEN, meter switch to 2nd HARMONIC. Allow power supply and 5065A to operate continuously.

m. Within 12 to 48 hours signal should begin to appear on 2ND HARMONIC meter. NOTE: the quartz oscillator on the 5065A must be within about 1×10^{-7} of 5 MHz for the signal to appear. If possible, set the 5065A oscillator against a reference standard before proceeding.

n. Check 2ND HARMONIC meter readings twice per day until reading is greater than 10 or reaches a maximum. If this does not occur within 15 days then cell flooding is not the problem.

o. When checking 2ND HARMONIC meter reading also record meter reading in PHOTO I position.

p. When 2ND HARMONIC reading is maximum or greater than 10, remove power from 5065A. Remove power supply connection, and reconnect red wire to XA4(1) and the black wire to XA8(1).

q. Replace bottom cover and reconnect AC power to 5065A. The 5065A internal circuit will now optimize the rubidium in the RVFR. Operate the 5065A continuously for about 1 week. The 2ND HARMONIC reading should stabilize. If the meter stabilizes at greater than 25 the instrument can be returned to service. If the reading is less than 25 perform adjustments described in paragraphs 5-24 thru 5-31 in the 5065A Operating and Service Manual.

3-10. FREQUENCY OFFSET AND CALIBRATION

3-11. The Rubidium Vapor Frequency Standard is a secondary frequency standard with a specified long term stability drift less than 1 part in 10^{11} per month.

3-12. Over a period of time, it may be necessary to check the offset that has accrued since last calibration and recalibrate the instrument to a primary frequency standard.

3-13. Frequency adjustment can be made after determining the frequency error with respect to a reference. Front panel MAGNETIC FIELD control is then adjusted tod correct any frequency offset.

Figure 3-2. Turn-On Procedure



1. Set rear 115/230 Vac switch to correspond with line voltage used.

2. Check that function switch is set at OPER and OSC FREQ FINE is set at 250. It should remain in this position during normal operation.

3. Connect ac power cord (supplied) between rear ac jack and ac line power.

4. On units equipped with Option 002, Standby Power Supply, press BATTERY switch to RESET; then switch to FAST CHARGE. Note that BATTERY lamp comes on. If ac line power fails, the BATTERY lamp will pulse.

5. Allow 1-hour warmup and then press START/AUTO to START momentarily. In units equipped with Option 001, a mechanical lock prevents placing this switch at AUTO START.

6. Press LOGIC RESET. CONTINUOUS OPERATION lamp should come on to indicate that frequency-stabilizing feedback loop is locked. If not, refer to Section V. Use 50 Ω load on outputs.

7. Rotate CIRCUIT CHECK (all positions) and check for meter readings (Table 3-1). If readings do not check out, refer to troubleshooting information in Section V. Note: After a 1-hour warmup, the 5065A is within approximately 1 part in 10^{10} of the UTC Time Scale and within approximately 5 parts in 10^{11} after 4 hours.

NOTE

If CONTINUOUS OPERATION lamp goes off after instrument has warmed up, the CIRCUIT CHECK meter switch should be set to the LAMP OVEN and CELL OVEN positions. If either meter indication is full scale, the instrument should be turned off immediately. If not the RVFR assembly could be damaged.

8. Let the 5065A battery continue to fast charge for a total of 16 hours. At the end of this time, set BATTERY switch to FLOAT for a continuous trickle charge.

9. After 24 hours running time, thermal equilibrium is established and meter readings are stabilized. Rotate CIRCUIT CHECK switch through all positions and record readings on the door chart.

10. See Paragraph 5-7 for periodic adjustments.

Table 3-2. Front Panel Lamp Indications

FRONT PANEL LIGHTS		DESCRIPTION
INTEGRATOR LIMIT	CONTINUOUS OPERATION	
OFF	ON	Indicates Normal Operation
ON	ON	Indicates quartz oscillator is locked to resonant frequency of RVFR but oscillator has exceeded one-half its control range. To correct this proceed as follows: 1. Set CIRCUIT CHECK switch to CONTROL. 2. Adjust OSC FREQ ADJ COARSE control for zero on CIRCUIT CHECK meter. NOTE: this adjustment may cause CONTINUOUS OPERATION lamp to go off. If this occurs, momentarily press LOGIC RESET button. CONTINUOUS OPERATION lamp should come on and stay on.
ON	OFF	Indicates one of the following troubles: 1. Quartz oscillator control limit has been exceeded. To correct, set CIRCUIT CHECK to CONTROL, adjust OSC FREQ ADJ COARSE for zero on CIRCUIT CHECK meter, then momentarily press LOGIC RESET. 2. Synthesizer Assembly A1 failure.
OFF	OFF	Press LOGIC RESET switch. If CONTINUOUS OPERATION lamp does not come on, look for one or more of the following troubles: 1. Quartz oscillator not locked to Rubidium resonance. 2. 2nd harmonic signal too low. 3. Fundamental signal too high. 4. Cell or lamp ovens not operating normally. Check CELL OVEN and LAMP OVEN on CIRCUIT CHECK meter. If meter is maximum TURN INSTRUMENT OFF. 5. Synthesizer failure. 6. FUNCTION switch not set to OPER.

3-14. The two following calibration technique measures the changing phase relationship between the 5065A 5 MHz output and a primary frequency standardd (HP 5061A Cesium Beam Frequency Standard or equivalent) 5 MHz output over an 8-hour period. Either procedure may be used and both are equally accurate. The phase change is converted to frequency error and the necessary MAGNETIC FIELD adjustment is set in.

3-15. The procedure is divided into two parts; Table 3-9 lists recommended test instruments and equipment. However, items with equivalent specifications may be substituted.

a. Calibrating the measurement system.

b. Performing the error measurement.

3-16. Calibrating the Measurement System: To calibrate the system for phase error measurement, proceed as follows:

a. Connect equipment as shown in Figure 3-5.

b. Set HP 8405A FREQ RANGE to agree with input frequency (5 MHz).

Figure 3-3. Magnetic Field Control

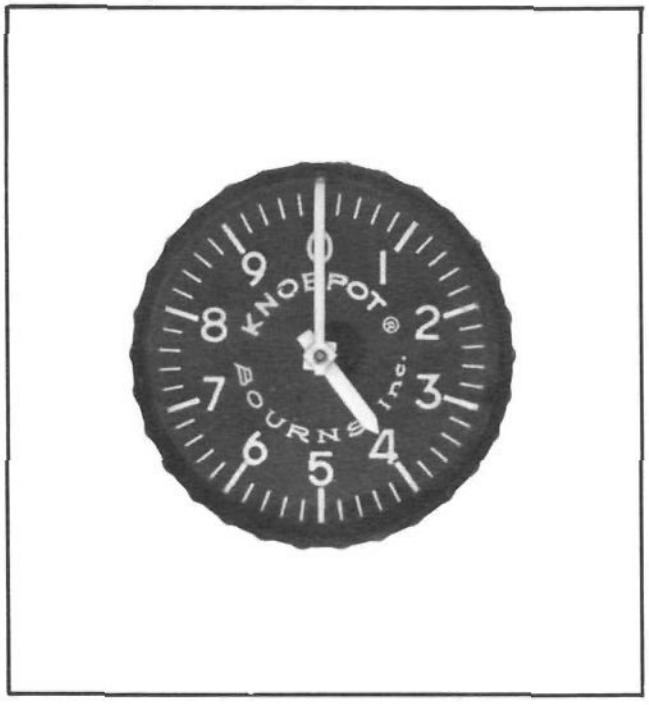

c. Zero HP 8405A PHASE meter by cranking in necessary offset with METER OFFSET control and the red ZERO knob.

d. With the meter zeroed, set the RANGE switch at +6. Recenter the PHASE meter with the red ZERO knob.

e. Set strip chart recorder range to .5 volt. Set pen to chart scale center with recorder zero control.

f. Set HP 8405A phase range to ±180 and change METER OFFSET by +180°.

g. Adjust 10k ohm pot for full scale pen deflection on recorder.

h. Change METER OFFSET polarity to (-) using the center knob of the METER OFFSET CONTROL. Pen should move to opposite chart edge. Make required fine adjustments to record zero and 10k pot for full scale chart deflection. The recorder is now calibrated for 360° or 0.2μsec full scale.

3-17. Frequency Difference Measurement: To perform the frequency difference measurement, proceed as follows:

a. Connect equipment shown in Figure 3-6.

b. Set HP 8405A Vector Voltmeter PHASE RANGE to 180° and METER OFFSET switch to 0.

c. Determine frequency error Δf/f using the relationship $\frac{\Delta t}{t} \approx \frac{\Delta f}{f}$.

d. Since chart calibration is 0.2 μsec full range (at 5 MHz), error in proportional parts can be determined from the strip chart record as illustrated in Figure 3-4.

Figure 3-4. Error Measurement

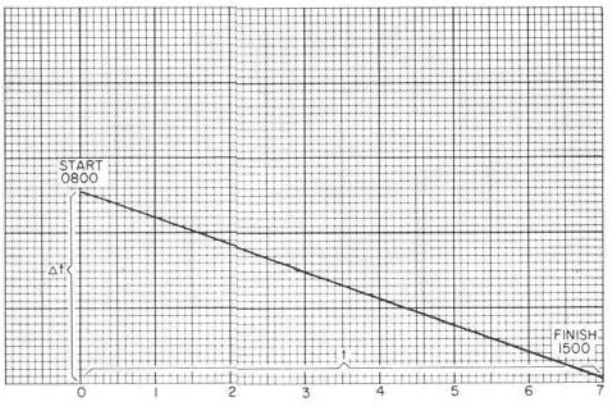

Example: Assume instrument under test has a phase change (over a 7-hour measurement period) of 0.1μsec (recorder half scale)

$$\frac{\Delta t}{t} \quad \frac{0.1\mu s}{7 \text{ hrs.}} \quad \frac{1 \times 10^{-7} s}{2.52 \times 10^{4} s} = 3.96 \times 10^{-12} \text{ freq. diff.}$$

e. Since one minor division of the MAGNETIC FIELD adjustment changes the 5065A frequency by 4 parts in 10^{12}, in Figure 3-4, the dial would be changed one minor division. During the phase measurement a cw movement of the HP 8405A phase meter indicates the 5065A frequency is higher than the reference standard and a ccw movement indicates the frequency is lower than the reference. If the MAGNETIC FIELD adjustment is at the end of the range:

1. Set the Magnetic Field adjustment to 5.00 and measure the frequency offset again. This is the "desired change in offset" Item 2 in Table 3-4. See Table 3-6 for an example of this calculation.

f. Increasing the MAGNETIC FIELD setting increases the 5065A frequency and decreasing this setting lowers it. Make this adjustment as required to align the 5065A with the reference standard.

g. After the MAGNETIC FIELD control has been reset, another phase comparison will show if the adjustment is correct, or if another adjustment is needed.

3-18. FREQUENCY COMPARISON USING K34-59991A LINEAR PHASE DETECTOR

a. Connect the K34-59991A OUTPUT terminals to a HP 680 Strip Chart Recorder or equivalent. Set recorder for 1V full scale and 1 in./hr. and turn on recorder.

b. Connect K34-59991A to line power and turn on the power switch.

Table 3-3. Frequency Offset Change Instructions

1. Remove instrument top cover and note setting of TIME SCALE thumbwheel and position of HI-LO switches. Record this information in Item 1.

NOTE

Be certain to include the correct algebraic sign (+ or -) with the numbers used in the following calculations.

2. Locate thumbwheel switch setting in Table 3-7 and record the corresponding Offset $\times 10^{-10}$ value in Item 1 under Offset ($\times 10^{-10}$).

3. Record the desired change in offset under Item 2 in the space provided.

4. Algebraically add the sum of Item 1 and Item 2 (Offset $\times 10^{-10}$) and record the total in Item 3.

5. Locate the nearest Offset $\times 10^{-10}$ in Table 3-7 that corresponds to the total offset recorded in Item 3. Record this offset, its corresponding TW switch setting, and HI-LO switch setting under Item 4 in the appropriate spaces provided.

6. Algebraically subtract Item 4 from Item 3 and record this remaining Frequency Offset in Item 5.

7. Divide the remainder recorded in Item 5 by 2 and record the answer in Item 6.

NOTE

The division in Step 7 is performed to convert the frequency offset to be corrected by MAGNETIC FIELD ADJUSTMENT into front panel MAGNETIC FIELD control setting.

8. Note present front panel MAGNETIC FIELD control setting and record this setting in Item 7.

9. Algebraically add the new MAGNETIC FIELD control setting from the setting recorded in Item 7. Record this total in Item 8.

NOTE

If the addition performed in Step 9 gives a negative number or a number greater than 10, the synthesizer setting selected in Item 4 must be changed. Select the adjacent offset from Table 3-7 closest to total offset recorded in Item 3, and record this new information in Item 4. Repeat Steps 5 through 9 using the new data. (See example, Table 3-4.)

10. Record Item 4 and Item 8 information in spaces provided under Item 9.

11. Set Synthesizer Assembly A1, TIME SCALE thumbwheel switch to the new setting recorded in Item 9a.

12. Set Synthesizer Assembly A1, HI-LO switch to the position recorded in Item 9b. Replace instrument top cover.

13. Adjust front panel MAGNETIC FIELD control to the setting recorded in Item 9c. Then perform Frequency Offset and Calibration (paragraph 3-10) again to align the 5065A with the reference standard.

14. Set front panel CIRCUIT CHECK switch to CONTROL and slowly adjust OSC FREQ COARSE control for CIRCUIT CHECK meter indication of "0".

15. If CONTINUOUS OPERATION lamp is off, wait 2 minutes, then momentarily press front panel LOGIC RESET button. CONTINUOUS OPERATION lamp should come on and stay on. The 5065A offset has been changed and the instrument is operating normally.

Table 3-4. Typical Frequency Offset Change, Sample (Insufficient MAGNETIC FIELD Control)

ITEM	OFFSET ($\times 10^{-10}$)	TW SWITCH SETTING	HI-LO SWITCH
1. Present synthesizer Assy TIME SCALE settings (see Table 3-7 for corresponding frequency offset)	-163.770	8619	HI
2. Desired change in Offset	-1×10^{-9}		
3. Sum (Item 1) + (Item 2)	-173.770		
4. Nearest synthesizer setting (Table 3-8)	-172.789	8238	HI
5. Remaining offset to be adjusted by MAGNETIC FIELD control	-.98	(-173.770) - (-172.789) (Item 3) - (Item 4)	
6. Change required in MAGNETIC FIELD control setting	-.49	Item 5 / 2	.98 / 2
7. Present MAGNETIC FIELD control setting	5.00		
8. New MAGNETIC FIELD control setting	4.51	(-.49) + (5.00)	
9. New offset settings are:			
a. Synthesizer TW switch		Item 4	8238
b. Synthesizer HI-LO switch		Item 4	HI
c. MAG FIELD control		Item 8	4.51

Figure 3-5. Equipment Setup for Calibrating Phase Measurement System

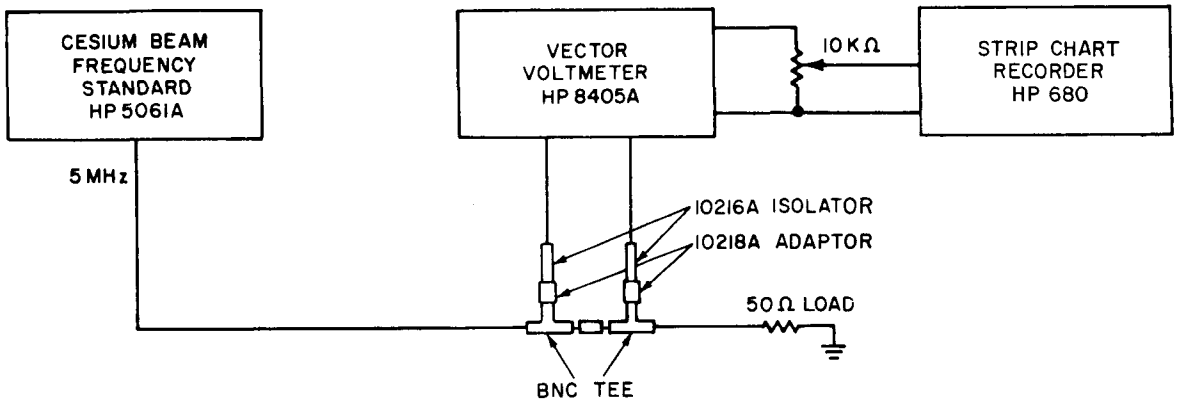

Table 3-5. Typical Frequency Offset Change, 0×10^{-10} Offset to -300×10^{-10}

ITEM	OFFSET (x 10^{-10})	TW SWITCH SETTING	HI-LO SWITCH
1. Present synthesizer Assy TIME SCALE settings (see Table 3-9 for corresponding frequency offset)	_____	_____	_____
2. Desired change in offset	_____		
3. Sum (Item 1) + (Item 2)	_____		
4. Nearest synthesizer setting (Table 3-8)	_____	_____	_____
5. Remaining offset to be adjusted by MAGNETIC FIELD control	_____	(Item 3) - (Item 4)	
6. Change required in MAGNETIC FIELD control setting	_____	$\frac{\text{Item 5}}{2}$	
7. Present MAGNETIC FIELD control setting	_____		
8. New MAGNETIC FIELD control setting	_____	Item 6) + (Item 7)	
9. New offset settings are:			
a. Synthesizer TW switch		Item 4._____	
b. Synthesizer HI-LO switch		Item 4._____	
c. MAG FIELD control		Item 8._____	

Figure 3-6. Equipment Setup for Frequency Difference Measurement

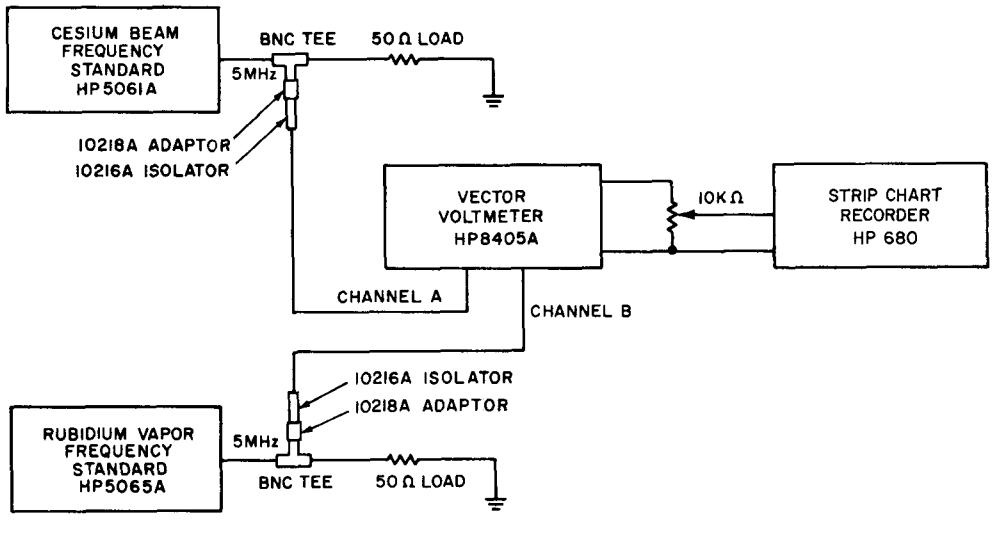

c. Connect a reference 5 MHz to INPUT A and the 5065A 5 MHz output to INPUT B.

d. Set "Zero-Oper-Full" front panel mounted toggle switch to "Zero". Adjust "Zero Scale" control for a zero scale trace on recorder.

e. Set switch to "Full" and adjust "Full Scale" control for a full scale trace on recorder.

f. Check both "Zero" and "Full Scale" outputs and readjust if necessary.

g. The recorder will now provide a continuous record of frequency comparison and will be automatically reset when the recorder pen reaches zero or full-scale position.

h. With the recorder set for 1 volt full scale and 1 in./ hr., the phase difference recorder will be 0.2 μsec full scale with 5 MHz inputs. See Figure 3-4 for an example of a frequency difference measurement under these conditions.

3-19. OPERATION WITH TIME STANDARD OPTION 001 (or 003)

3-20. Option 001 provides Model 5065A with a one pulse-per-second clock output. The divider drive is an internally connected 1 MHz signal from A6 frequency Divider Assembly. TIME DELAY controls are located on the A5 Assembly and can be seen with the top cover removed. The TIME DELAY six thumbwheel switch controls the phase of the clock-pulse output from 1 microsecond to 1 second with respect to an external reference. The 0-1 microsecond TIME DELAY screwdriver adjustment allows fine adjustment over any 1 microsecond portion of the thumbwheel settings.

3-21. The time standard option includes a 24 hour, LED digital clock assembly (A19) which indicates time in hours, minutes and seconds. The SYNC button on Divider Assembly A5 enables the instrument to synchronize to an external reference standard. The digital clock is set by pressing the SET pushbutton, SLOW/FAST switch and HOLD pushbutton (located on rear of clock).

3-22. SETTING THE CLOCK PHASE TO AN EXTERNAL CLOCK

3-23. The phase difference between the 5065A 1-PPS output and an external reference clock may be set to any desired point between coincidence and 1 second by using the following procedure. The technique used will depend on the Model 5065A application and individual user requirements.

3-24. Automatic Synchronization

3-25. To automatically synchronize the 1-PPS output pulse and the internal clock drive with an external 1-PPS reference, proceed as follows:

a. Remove the top cover for access to TIME DELAY controls.

b. Rotate the 0-1 sec TIME DELAY control maximum cw for minimum delay (do not overtighten).

c. Set the TIME DELAY thumbwheel switches for the desired time delay of the clock pulse. The thumbwheel switches read directly. However, there is a 9-11 μsec built-in delay in the digital divider circuit which should be added to the time-delay calculation.

d. Connect the reference pulse to the rear SYNC INPUT jack (must be greater than +5V with less than 50 nanoseconds rise-time and a width greater than 0.5 μsec.

e. Press SYNC pushbutton on A5 Assembly and hold down at least 1-second. The next tick of the clock output will be delayed according to the setting of the thumbwheel switches (plus the 9 to 11 μsec built-in delay). For more precise adjustment of time delay, the 0-1 μsec TIME DELAY provides continuous delay adjustment from 0-1 μsec.

f. When the clock pulse is synchronized, the digital clock will advance in synchronism with the instrument 1PPS.

g. For a delay of less than 10 μsec, the thumbwheel switches are first set at 999,999. Then the thumbwheel setting is decreased as required and final adjustment is made with the 0 to 1 μsec TIME DELAY control. Use an arrangement like that of Figure 3-8 to accurately measure time intervals between the two 1-PPS pulses. For short delay intervals, use an oscilloscope. For longer delay intervals, use the optional counter arrangement.

3-26. Manual Synchronization

3-27. If the reference pulse does not meet the requirements for sync operation (>+5V, <50 nanosecond rise time, and width >0.5 μsec), use the technique of Figure 3-8 to measure time intervals. Set time delay of the 5065A 1-PPS output as required with the TIME DELAY thumbwheel switches and 0-1 μsec control. For small delay intervals, use an oscilloscope. For larger delay intervals, use the optional counter arrangement.

3-28. Setting the Clock

a. Remove top cover.

b. Set hours, minutes, and seconds by placing the SLOW/FAST toggle switch at FAST, and momentarily depress the SET pushbutton for rapid advance of the display. Place toggle switch to SLOW and press SET pushbutton for slow advance of the display.

c. Set seconds on the display slightly ahead of the reference clock, and then press the HOLD pushbutton. Release HOLD pushbutton when reference clock time is identical to the digital clock.

d. Replace the instrument top cover.

Table 3-6. Offset Frequency Settings

Offset ($\times 10^{-10}$)	Synthesizer Thumbwheel Setting	Synthesizer Frequency	HI-LO Switch Setting
-1000.619	9348	5314417.18	
-986.784	9189	5314426.63	
-977.485	9030	5314432.99	
-970.804	8871	5314437.56	
-958.700	8394	5314445.83	
-950.573	7758	5314451.38	
-940.729	5691	5314458.11	
-930.051	9841	5314465.41	
-911.851	7472	5314477.85	
-903.502	8267	5314483.55	
-893.419	8744	5314490.45	
-888.110	8903	5314494.07	
-881.000	9062	5314498.93	
-870.988	9221	5314505.78	LO
-855.841	9380	5314516.13	
-844.926	8919	5314523.59	
-840.537	8458	5314526.59	
-830.246	9539	5314533.62	
-817.281	8776	5314542.48	
-809.448	9237	5314547.84	
-800.445	8935	5314553.99	
-789.990	8029	5314561.14	
-777.700	9698	5314569.54	
-763.045	8347	5314579.55	
-754.607	8951	5314585.32	
-745.271	9253	5314591.70	
-737.056	8808	5314597.32	
-723.264	9555	5314606.74	
-712.141	8522	5314614.34	
-707.350	8967	5314617.62	
-695.305	9412	5314625.85	
-685.873	8681	5314632.30	
-678.286	9269	5314637.48	
-666.835	9126	5314645.31	
-658.605	8983	5314650.93	
-647.504	8697	5314658.48	
-640.497	8411	5314663.31	
-630.506	7696	5314670.14	LO
-621.028	5980	5314676.62	
-608.302	9857	5314685.31	
-591.175	7013	5314697.02	
-582.542	8014	5314702.92	
-572.122	8586	5314710.04	
-562.949	8872	5314716.31	
-556.364	9015	5314720.81	
-547.544	9158	5314726.84	
-535.114	9301	5314735.34	
-526.775	8745	5314741.04	
-516.291	9444	5314748.20	
-502.712	9031	5314757.48	
-497.249	8618	5314761.22	HI

Offset ($\times 10^{-10}$)	Synthesizer Thumbwheel Setting	Synthesizer Frequency	HI-LO Switch Setting
-484.432	9587	5314769.98	
-472.694	8491	5314778.00	
-468.270	8904	5314781.02	
-458.497	9317	5314787.70	
-447.258	9047	5314795.38	
-440.981	8777	5314799.67	
-430.592	7697	5314806.77	
-418.827	9730	5314814.81	
-403.318	8253	5314825.41	
-396.379	8793	5314830.16	
-389.910	9063	5314834.58	
-378.205	9333	5314842.58	
-367.897	8936	5314849.62	
-360.496	8142	5314854.68	
-350.578	9603	5314861.46	
-336.597	8682	5314871.02	
-330.570	9079	5314875.14	HI
-315.411	9476	5314885.50	
-303.530	8825	5314893.62	
-293.966	9349	5314900.15	
-286.102	8571	5314905.53	
-279.522	9222	5314910.03	
-269.131	9095	5314917.13	
-255.182	8841	5314926.66	
-250.274	8714	5314930.02	
-240.036	8333	5314937.01	
-230.504	7698	5314943.53	
-221.054	6301	5314949.99	
-205.481	9873	5314960.63	
-191.251	5952	5314970.36	
-181.450	7603	5314977.05	
-172.789	8238	5314982.97	
-163.770	8619	5314989.14	
-154.369	8873	5314995.56	
-147.878	9000	5315000.00	
-139.498	9127	5315005.73	
-128.265	9254	5315013.40	
-112.423	9381	5315024.23	
-101.785	8889	5315031.50	
-97.677	8397	5315034.31	
-88.401	9508	5315040.65	
-77.379	8651	5315048.18	
-71.051	9143	5315052.51	
-60.293	8413	5315059.86	HI
-47.664	9635	5315068.49	
-32.628	8667	5315078.77	
-26.959	9032	5315082.64	
-14.426	9397	5315091.21	
-6.024	8556	5315096.95	
0.000	9159	5315101.07	

Table 3-7. Synthesizer Setting vs. Frequency Offset (See Table 3-6 for Thumbwheel Switch Settings)

Synthesizer Thumbwheel Setting	Offset ($\times 10^{-10}$)	Synthesizer Thumbwheel Setting	Offset ($\times 10^{-10}$)
5691	-940.729	8889	-101.785
5952	-191.251	8903	-888.110
5980	-621.028	8904	-468.270
6301	-221.054	8919	-844.926
7013	-591.175	8935	-800.445
7472	-911.851	8936	-367.897
7603	-181.450	8951	-754..607
7696	-630.506	8967	-707.350
7697	-430.592	8983	-658.605
7698	-230.504	9000	-147.878
7758	-950.573	9015	-556.364
8014	-582..542	9030	-977.485
8029	-789.990	9031	-502.712
8142	-360.496	9032	-26.959
8238	-172.789	9047	-447.258
8253	-403.318	9062	-881.000
8267	-903..502	9063	-389.910
8333	-240.036	9079	-330.570
8347	-763.045	9095	-269.131
8394	-958.700	9126	-666.835
8397	-97.677	9127	-139.498
8411	-640.497	9143	-71.051
8413	-60.293	9158	-547.544
8458	-840.537	9159	-0.000
8491	-472.694	9189	-986.784
8522	-712.141	9221	-870.988
8556	-6.024	9222	-279.522
8571	-286.102	9237	-809.448
8586	-572.122	9253	-745.271
8618	-497.249	9254	-128.265
8619	-163.770	9269	-678.286
8651	-77.379	9301	-535.144
8667	-32.628	9317	-458.497
8681	-685.873	9333	-378.205
8682	-336.597	9348	-1000.619
8697	-647.564	9349	-293.966
8714	-250..274	9380	-855.841
8744	-893.419	9381	-112.423
8745	-526.775	9412	-695.305
8776	-817.281	9444	-516.291
8777	-440.981	9476	-315.411
		9539	-830.264
8793	-396.379	9555	-723.264
8808	-737.056	9587	-484.432
8825	-303.530	9603	-350.578
8841	-255.182	9698	-777.700
8871	-970.804	9730	-418.827
8872	-562.949	9857	608.302
8873	-154.369	9873	-205.481

Table 3-8. Recommended Test Equipment

Instrument Type	Required Characteristics	Recommended Instrument
Frequency Standard	Frequency: 5 MHz Output Level: 1 V rms into 50 ohms	HP Model 5061A
Recorder	Strip Chart, 1 inch/hr.	HP Model 680
Vector Voltmeter	Frequency: 1 MHz to 1 GHz Voltage range: 1.5 mV to 1 V rms	HP Model 8405A
Terminations	Impedance: 50 ohms	HP Model 11048B

3-29. OPERATION WITH STANDBY POWER SUPPLY OPTION 002

3-30. Option 002 provides the 5065A with at least 10 minutes of standby power so that the Model 5065A can be moved; for example, from one room to another. Maximum recharge (FAST CHARGE) takes 16 to 18 hours. Necessary recharge time can be calculated on the basis of 1½ hours charge time per minute of standby operation up to a maximum of 16 to 18 hours. The front-panel BATTERY warning light indicates three battery-circuit conditions:

a. Flashes on and off when instrument is powered from internal battery supply (when disconnected from line power).

b. On when battery is being FAST CHARGED (with 5065A connected to line power).

c. Off with BATTERY switch at FLOAT (continuous trickle charge).

3-31. If the instrument must be turned off for any reason, remove ac power and then momentarily disconnect F4 (this is the fuse located over the battery). In this manner, relay A2K1 is unlatched to de-energize the circuits and prevent battery drain.

Figure 3-7. Internal Measurement with Automatic Synchronization

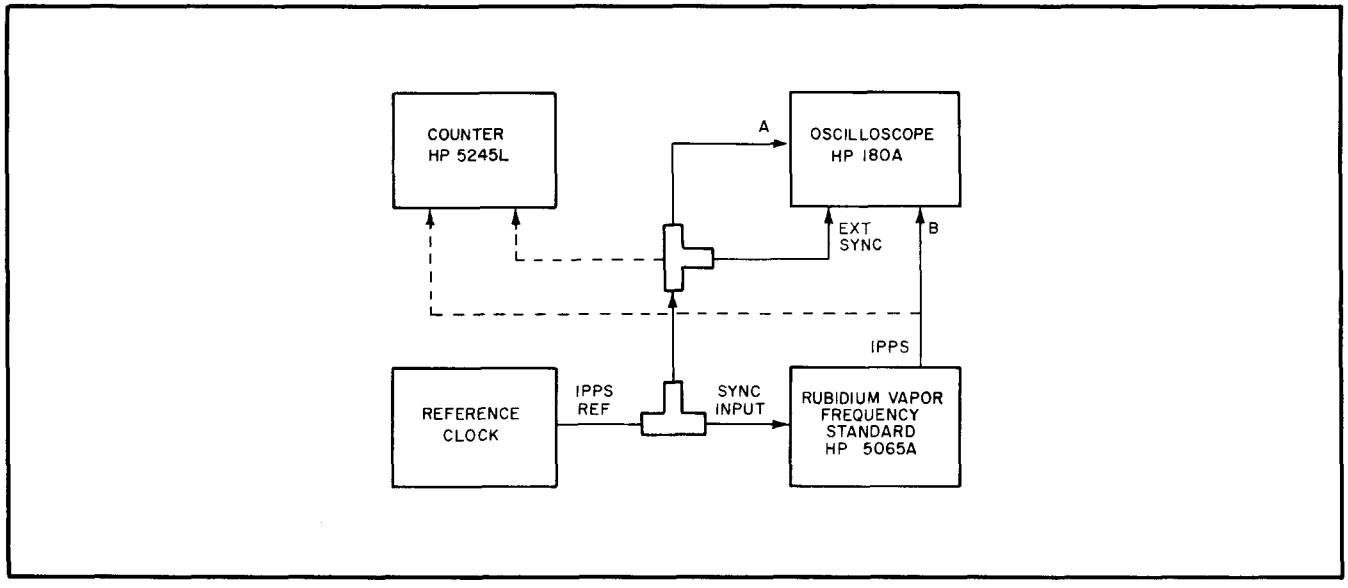

Figure 3-8. Internal Measurement with Manual Synchronization

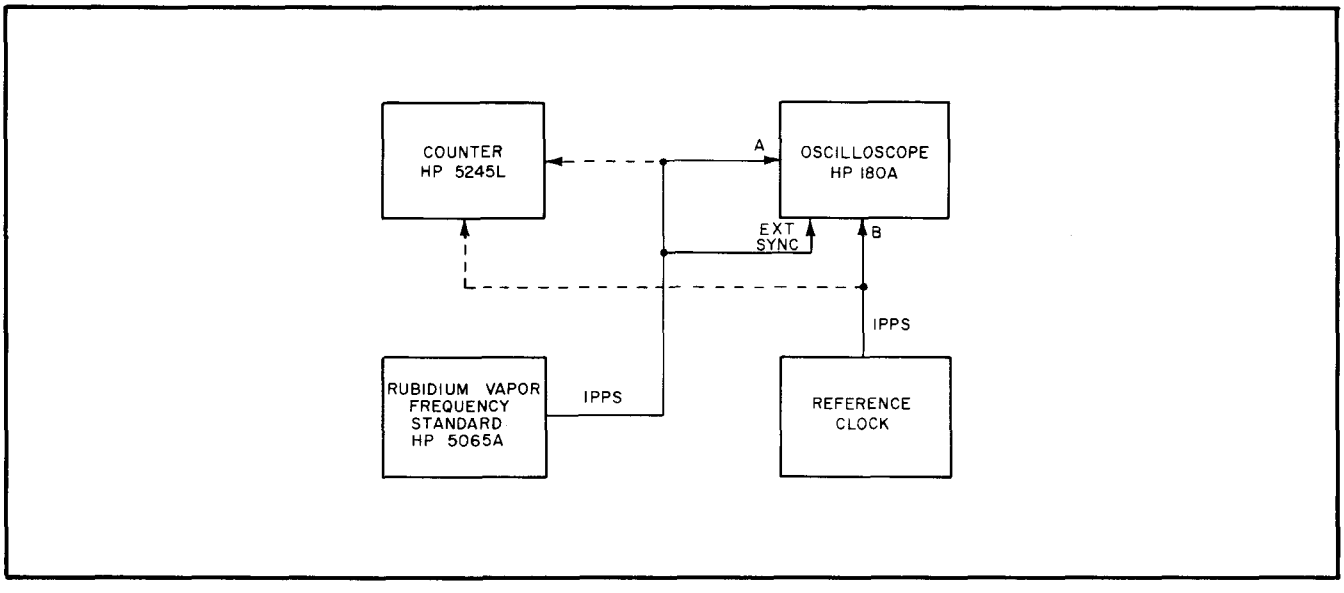

Figure 3-9. Front Panel Controls

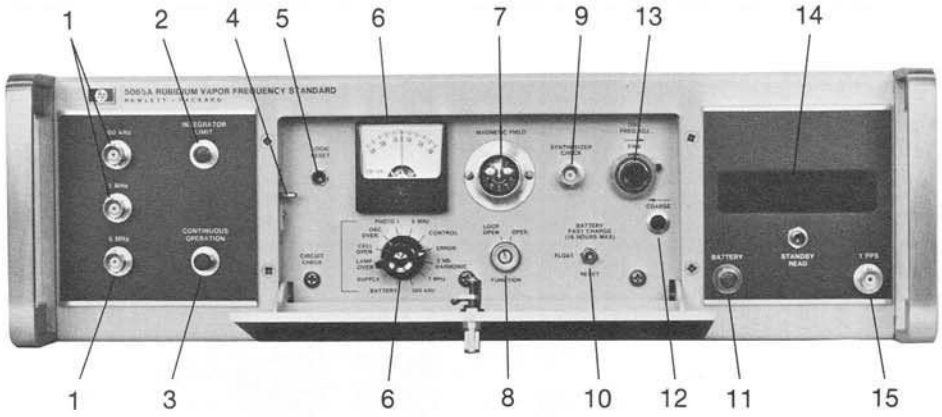

1. OUTPUTS: 5 MHz, 1 MHz, 100 kHz: BNC jacks paralleled with rear-panel outputs. Output level is 1 volt rms (minimum) into 50 ohm load.

2. INTEGRATOR LIMIT lamp: Normally off indicating that quartz oscillator dc correction voltage is less than the dynamic limit of ±5 Vdc. When ON, indicates that quartz oscillator dc correction voltage is approaching the dynamic limit of ±5 Vdc.

3. CONTINUOUS OPERATION lamp: Normally on, indicates circuits are functioning properly.

4. START-AUTO/START divider mode switch: Allows regenerative dividers to be operated in one of two modes: to manually start dividers, momentarily press to START, then release; for automatic start, set to AUTO START.

5. LOGIC RESET switch: Push to reset logic circuit and enable CONTINUOUS OPERATION lamp when operation is resumed after power interruption, repair, or adjustment.

6. CIRCUIT CHECK meter and switch: Provides monitoring of various circuits for operation checks and trouble indication, as specified in Table 5-3.

7. MAGNETIC FIELD adjustment: A high-resolution, 10-turn potentiometer with clock dial; controls the magnetic field within the RVFR Assy. Used as a fine control to set the 5065A to a specific frequency. A change of one minor division will change the frequency by 4 parts in 10^{12}. Total adjustment is 2 parts in 10^{9}.

8. FUNCTION switch: Controls the instrument mode of operation. OPERATE: Instrument operating with quartz oscillator locked to the RVFR resonant frequency. LOOP OPEN: All circuits operating with loop open.

9. SYNTHESIZER CHECK jack: Synthesizer Assembly A1 output frequency is available at this BNC jack to check Synthesizer operation as outlined in TIME SCALE CHECK of Table 5-2.

10. BATTERY switch (Option 002 and 003 only): Controls BATTERY lamp and internal standby battery charging rate. Three position switch has three functions:
    a. FAST CHARGE: Charges battery at rapid rate with 16 hours maximum charging time.
    b. FLOAT: Standby battery receives trickle charge (normal position).
    c. RESET: Resets BATTERY lamp circuits after ac line power failure.

11. BATTERY lamp (Option 002 and 003 only): Operates with front panel BATTERY switch. Flashes on and off when ac power fails. When BATTERY switch is set to FAST CHARGE (16 HOURS MAX) lamp is on. Set BATTERY switch to RESET to turn lamp off.

12. OSC FREQ ADJ COARSE: Provides quartz oscillator frequency adjustment of 1 part in 10^{6}. Use only COARSE control to correct oscillator frequency with frequency-locked operation.

13. OSC FREQ ADJ FINE: Control used for testing only. Normally set to 250.

14. 24-Hour Digital Clock (Option 001 and 003 only): See Paragraph 3-29.

15. 1 PPS (Option 001 and 003 only): +10V peak, 20 μsec pulse at 1 pulse-per-second rate.

Figure 3-10. Rear Panel Operating Controls

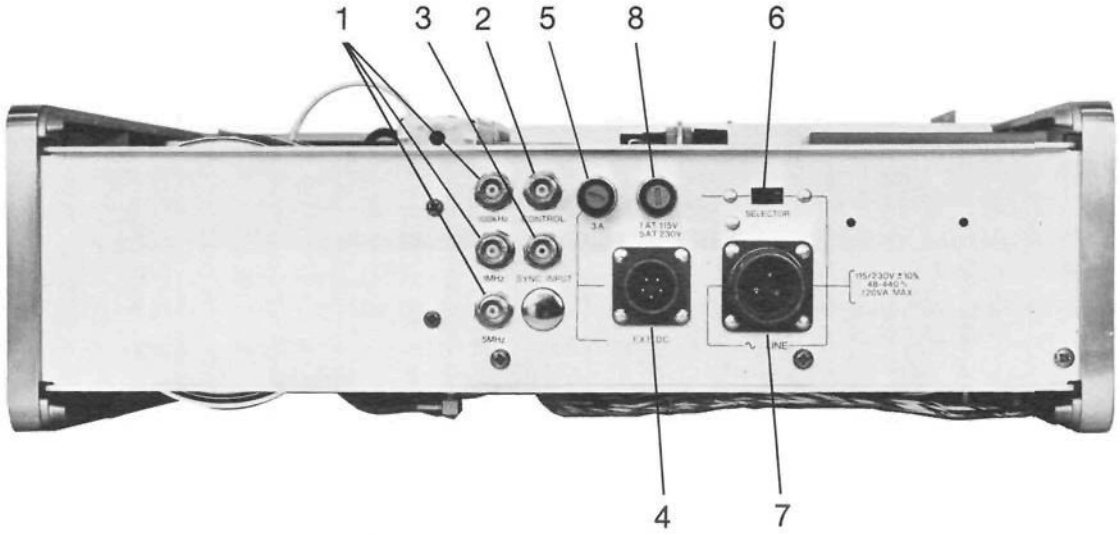

1. OUTPUTS - 5 MHz, 1 MHz, 100 kHz: BNC jacks paralleled with front panel outputs.

2. CONTROL jack: Normally not used. Connected to voltage control point between integrator and quartz oscillator.

3. SYNC INPUT jack (Option 001 only): Input to digital divider circuits for external synchronizing pulse. External synchronizing pulse must be +5 V or more with rise-time of less than 50 nsec, and width >0.5 μsec.

4. EXT DC connector: Five-pin male connector. Connects 5065A to external 24-volt dc supply.

5. EXT DC fuse (F2): 3-ampere fuse (HP Part No. 2110-0003) for external 24-volt dc power.

6. 115V/230V AC LINE switch: Set to expose correct ("115" or "230") for the ac line voltage used.

7. AC LINE jack: Accepts round female connector on power cable supplied.

8. AC LINE fuse: 1-ampere Slo-Blo fuse (HP Part No. 2110-0007) for 115 Vac operation or 0.5 ampere Slo-Blo (HP Part No. 2110-0008) for 230 Vac operation.

Figure 3-11. Top Operating Controls

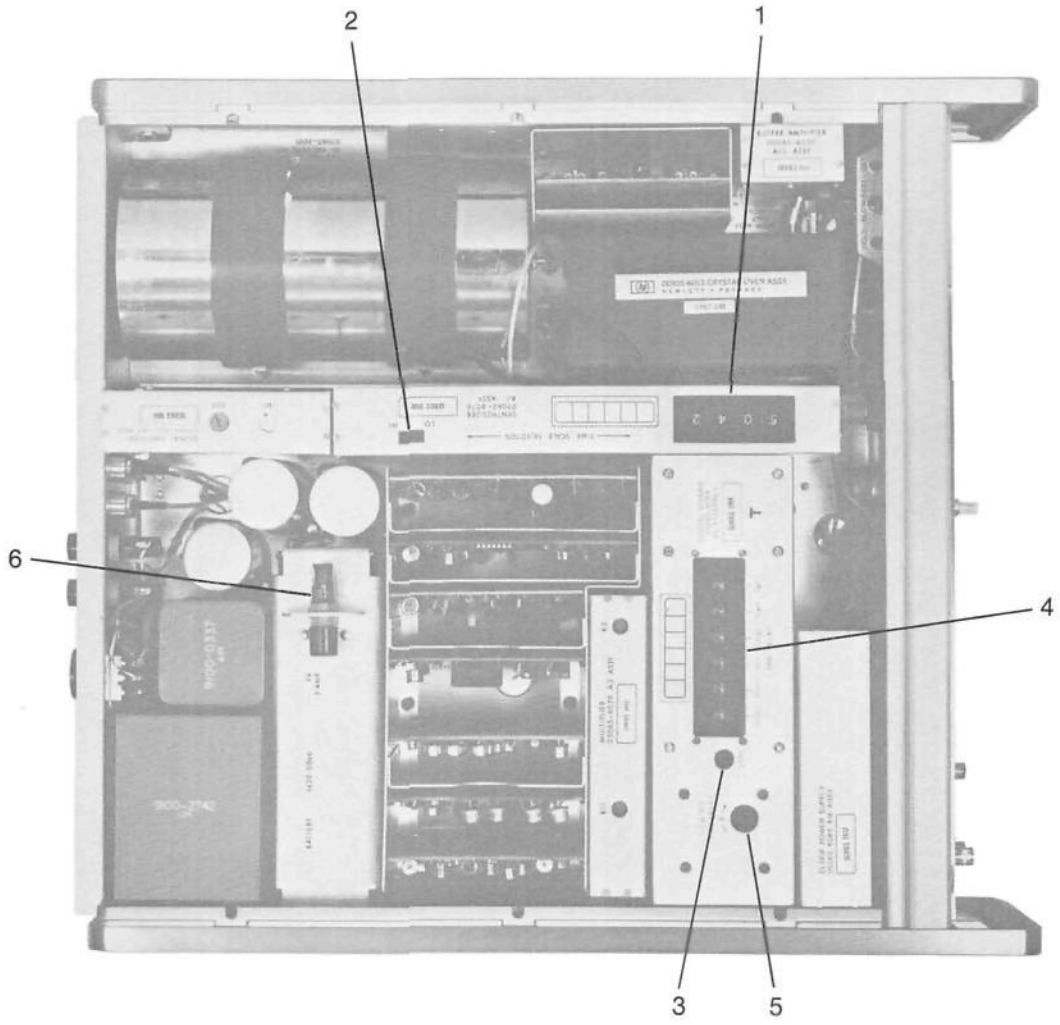

1. Synthesizer TIME CLOCK SELECTOR thumbwheel switch: selects synthesized frequency.

2. Synthesizer TIME SCALE SELECTOR HI-LO switch: used with thumbwheel switch to select synthesized frequency.

3. Clock SYNC switch (Option 001 and 003 only): Synchronizes digital clock with an external clock when depressed; clock remains synchronized when released.

4. Clock TIME DELAY thumbwheel switch (Option 001 and 003 only): selects time delay between an external reference pulse and the internal 1 pulse-per-second clock pulse. Adjustable in decade steps from 1 μs to 1 sec.

5. 0-1 μSEC TIME DELAY control (Options 001 and 003 only): allows continuous adjustment of clock pulse delay over any 1 μsec range.

6. Battery fuse (F4): removed momentarily to disconnect optional standby battery from circuit for storage or shipment. Battery will remain disconnected after fuse is replaced.

SECTION IV

THEORY OF OPERATION

4-1. THEORY

4-2. General

4-3. For circuit theory on individual assemblies, refer to the schematic fold-out pages at the rear of this manual.

4-4. The simplified block diagram of Figure 5-6 shows the frequency-stabilizing feedback loop. The 5 MHz quartz oscillator output is stabilized, first by comparing the 5 MHz output in a frequency-synthesizing and multiplying process with the resonant frequency of Rb^{87} and then translating the difference frequency into a control voltage which corrects the quartz oscillator frequency.

4-5. Oscillator Assembly A10 generates the 5 MHz for A3 Multiplier where 5 MHz is: (1) phase modulated at 137 Hz, (2) multiplied to 60 MHz and, (3) combined with the synthesized 5.315. . . MHz after multiplication to 60 MHz. The 5.315. . . MHz is derived from 5 MHz in a frequency-synthesizing process. The combined 60 MHz and 5.315. . . MHz signal goes from A3 Multiplier to the harmonic generator step-recovery diode in A12 RVFR (Rubidium Vapor Frequency Reference) Assy. The harmonic generator/step-recovery diode couples to the Rb^{87} absorption cell which is housed in a microwave cavity tuned to 6.834685 GHz, the Rb^{87} resonant frequency. In the harmonic generator/step-recovery diode, 5.315. . . MHz phase-modulates the 114th harmonic of 60 MHz to produce the 6.834685. . . GHz lower sideband which matches the microwave cavity resonance and causes energy level transitions in the Rb^{87} gas.

4-6. Figure 4-3 shows the Rb^{87} absorption cell which contains the Rb^{87} gas. A 100-MHz oscillator in A12 RVFR Assy drives the lamp filled with Rb^{87} gas. The resulting light output passes through the Rb^{85} filter cell and the Rb^{87} absorption cell. The light output of the Rb^{87} absorption cell is monitored by a photodiode. Rb^{85} photo excitation is removed in the Rb^{85} filter cell to remove undesired transitions. When the Rb^{87} gas is excited by the 6.834685. . . GHz microwave field at its resonant frequency, it increases in opacity to reduce light transmission about ½% as illustrated in Figure 4-1. This phenomenon permits using Rb^{87} gas as a frequency reference. Phase modulation at 137 Hz (in A3 Multiplier) produces a sinusoidal scan of the excitation frequency. As a result, 2nd harmonic 274 Hz appears in the photodiode output when "on" frequency and fundamental 137 Hz appears when "off" frequency, as shown in Figure 4-2. For example, as the 6.834685 . . . GHz excitation is steered towards the Rb^{87} natural resonance by the feedback action of the frequency-control system, second harmonic appears in the photodiode output is mostly 2nd harmonic 274 Hz with a small amount of 137 Hz.

4-7. Temperature control of the Rb^{87} lamp and absorption cell in the A12 RVFR Assy is accomplished by temperature control circuits in the A11 Temperature Control Assy working with temperature sensors and heating elements in A12 cell and lamp ovens. Operating current for these ovens is monitored in the CELL OVEN and LAMP OVEN positions of the CIRCUIT CHECK switch. The A10 Oscillator Assy has its own temperature-control circuit for the 5 MHz quartz oscillator. Operating current for the oscillator oven is monitored in the OSC OVEN position of the CIRCUIT CHECK switch.

Figure 4-1. Rubidium Absorption Plot

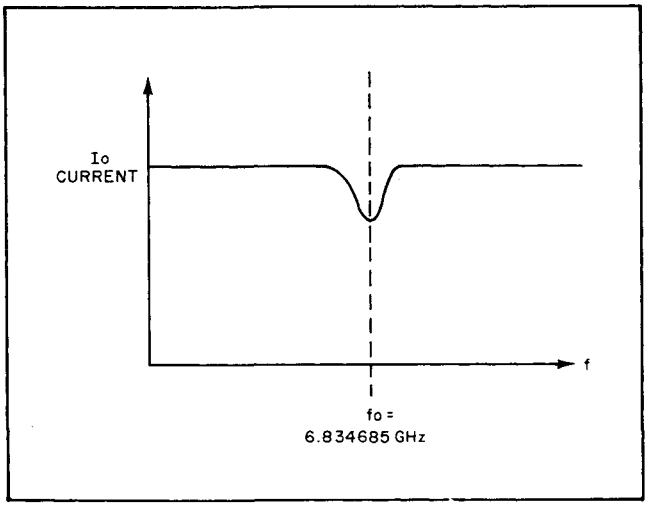

Figure 4-2. Rb^{87} Absorption Cell Output

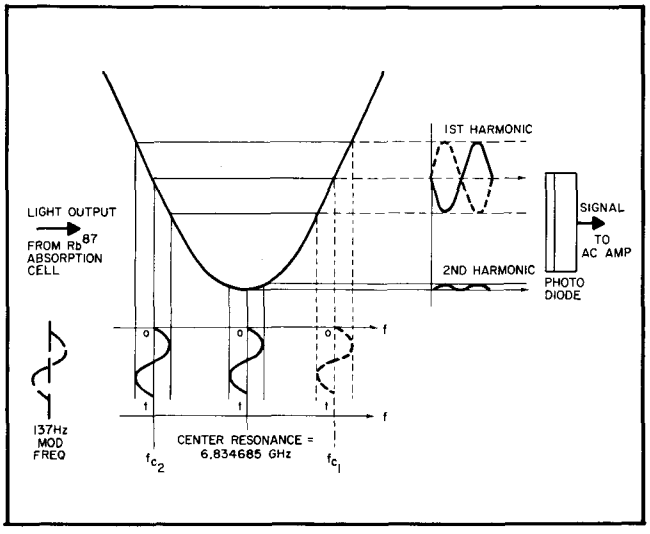

4-8. The A12 RVFR photodiode output is applied to A7J1. This signal contains a fundamental frequency of 137 Hz, a second harmonic of 274 Hz and is proportional to the frequency error. The composite input signal is amplified and then the 137 Hz and 274 Hz signals are separated, filtered and amplified. The 137 Hz output at A7("Y") is connected A8(18) and the 274 Hz output at A7("WBO") is connected to the 2ND HARMONIC position of MI via A17(13).

4-9. In A8 Phase Detector, a reference 137 Hz signal is compared in phase with the 137 Hz input signal. The resulting dc output is either positive or negative depending on the phase of the 137 Hz input. Also, the dc output amplitude is proportional to the 137 Hz input amplitude. This dc output goes to the ERROR position of the CIRCUIT CHECK meter and to A9 Integrator Assembly.

4-10. In A9 Integrator Assembly, the dc error signal is amplified and integrated to slow feedback loop response. Connecting to this assembly is the FUNCTION switch which opens the control loop so that the A10 Oscillator can operate independently. In this LOOP OPEN position, A9 output is shorted to the input and the error signal is not amplified. With the FUNCTION switch at OPERate, the amplified and integrated dc control voltage connects to a varactor diode in A10 quartz oscillator circuit to correct the 5 MHz output frequency.

4-11. One 5 MHz output from A10 Oscillator is routed through a power amplifier in A3 Multiplier Assembly to A13 Buffer Amplifier. In A13 module, power amplifiers feed A1 Synthesizer and the front and rear 5 MHz output jacks. The second 5 MHz output from A10 Oscillator supplies A6 1 MHz Frequency Divider.

4-12. The A6 1 MHz Frequency Divider processes 5 MHz in a regenerative frequency divider to produce 1 MHz. One MHz outputs go to the front and rear 1 MHz output jacks and also to A4, 100 kHz Frequency Divider. A start circuit, which includes the START-AUTO-START switch, provides for manual or automatic starting of the regenerative divider circuit. Another A6 output is 1 MHz from a buffer amplifier which feeds the A5 Digital Divider Assembly.

4-13. The front panel START-AUTO-START switch permits manual starting so that frequency-divider circuits will not restart automatically. In the AUTO-START position, this switch provides for automatic restarting of divider circuits so the 5065A instrument can serve as a frequency source. When the Option 001 Time Standard is installed, a mechanical lock prevents using the AUTO-START position.

4-14. The A4 Frequency Divider processes the A6 1 MHz output through a decade divider to produce 100 kHz at front and rear 100 kHz output jacks

4-15. OPTION 001, TIME STANDARD

4-16. Time Standard Option 001 consists of A5 Digital Divider, A16 Digital Divider Power Supply, and the front panel mechanical clock. The A5 module processes 1 MHz to produce digitally delayed 1 PPS output pulses. A SYNC INPUT jack at the rear enables the user to synchronize with an extternal reference. Incremental delay of the 1 PPS output is set by the TIME DELAY thumbwheel switches. Continuously-variable delay of the 1 PPS output, that is processed by the A16 module for a "tick" pulse output at the front-panel 1 PPS jack, is set by the 0-1 μsec TIME DELAY adjustment.

4-17. An additional A5 control is the SYNC switch. To synchronize the 1 PPS output with a reference pulse, the SYNC pushbutton is depressed for at least 1-second and then released. If a sync pulse is connected to the rear SYNC INPUT jack, one reference pulse will enter the synchronizing circuits during the 1-second interval. This pulse will reset the digital divider. The output 1 PPS "tick" pulse from the 1 PPS front panel jack will then be in sync with the reference pulse.

4-18. Two 1 PPS inputs connect to the A16 Digital Divider Power Supply from the A5 module. One input pulse is shaped in a blocking oscillator and then amplified to provide the front panel 1 PPS "tick" output. The other 1 PPS input triggers a flip-flop stage which provides clock-driving pulses. The flip-flop output drives push-pull amplifiers to pulse the front-panel clock at a 1 PPS (or 10 PPS) rate.

4-19. The A14 Logic Assembly monitors several key points in the 5065A circuits and turns off the CONTINUOUS OPERATION lamp to indicate an operational discontinuity when one or more of the logic inputs indicate a "non-operating" condition. These logic inputs are shown in Table 4-1. In addition to the CONTINUOUS OPERATION lamp output, the Logic Assembly delivers an INTEGRATOR LIMIT lamp output when the A9 integrator output exceeds 50% of maximum. After an operational discontinuity, the LOGIC RESET switch resets the CONTINUOUS OPERATION lamp when all logic inputs are "operational."

Table 4-1. Logic Signals

Signal	Non-Operational Condition
a. Synthesizer Lock Signal	When present
b. AC Amplifier 2nd Harmonic Signal	When absent
c. Phase Detector Fundametal Error Signal	When too much signal
d. Cell Temperature Signal	When cell oven is full on or turned off
e. Lamp Temperature Signal	When lamp oven is full on or turned off
f. Function Switch Signal	When present with Function switch at LOOP OPEN

4-20. OPTION 002, STANDBY POWER SUPPLY

4-21. Standby Power Supply Option 002 automatically cuts in battery power if there is an ac (or dc) line interruption; for example when the unit is moved. This is accomplished by floating the battery across the power supply so that the battery takes over should ac (or dc) line power fail. This option consists of A2 Battery Charger Assembly, the nickel-cadium battery, and the BATTERY switch and lamp. The nickel-cadium standby battery is charged as desired in either FAST CHARGE mode or a FLOAT (trickle charge) mode by a constant current charging circuit. The front panel BATTERY lamp pulses on and off to indicate a line-power discontinuity. With the BATTERY switch at FAST CHARGE, the BATTERY lamp glows steadily.

4-22. The FAST CHARGE position of the BATTERY switch is used to recharge the battery after discharge. After charging in the FAST CHARGE position, the BATTERY switch is set to FLOAT, for a trickle charge to maintain battery charge.

Figure 4-3. RVFR Assembly Block Diagram

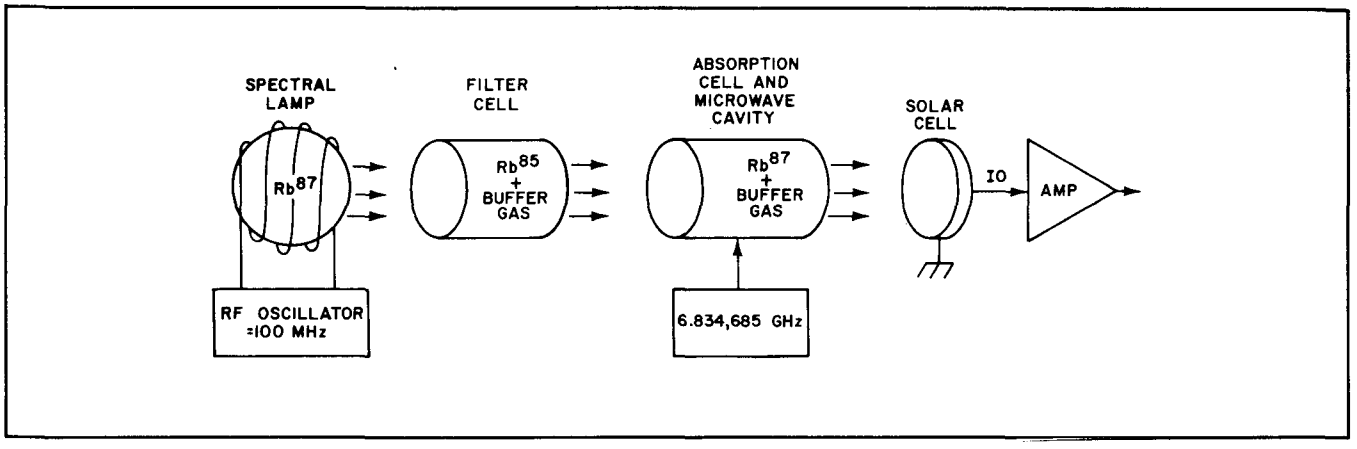

SECTION V

MAINTENANCE

5-1. INTRODUCTION

5-2. This section provides maintenance and service information for the instrument. This section is organized as follows:

Paragraph No.	Section
5-7	Periodic Maintenance
5-8	Instrument Troubleshooting
5-19	Loop Alignment Procedure

5-3. In addition to the above sections, Table 5-1 lists module designations, Table 5-2 gives in-cabinet performance check to check instrument specifications, Table 5-3 gives front panel meter checks, Table 5-4 lists signal checks, and Table 5-5 gives recommended test equipment for performance checks maintenance, and troubleshooting.

Table 5-1. Assembly Designations

Assy	Name	HP Part No.
A1	Synthesizer	05065-6076
A2	Battery Charger (Opt. 002, 003)	05065-6022
A3	Multiplier	05065-6078
A4	100 kHz Frequency Divider	05065-6070
A5	Digital Divider (Opt. 001, 003)	05065-6084
A6	1 MHz Frequency Divider	05065-6016
A7	AC Amplifier	05065-6080
A8	Phase Detector	05065-6013
A9	Integrator	05065-6015
A10	Oscillator	00105-6034
A11	RVFR Temperature Controller	05065-6024
A12	RVFR	05065-6001
A13	Buffer Amplifier	05065-6020
A14	Logic	05065-6012
A15	Power Supply and Regulator	05065-6023
A16	Power Supply, Digital Divider (Option 001, 003)	05065-6085
A17	Terminal Board	05065-6014
A18	Jumper Board	05065-6057
A19	Clock Display	05065-60125 (Opt. 001) and 05065-60136 (Opt. 003)

5-4. For individual module or circuit board maintenance, see the appropriate schematic foldout page. The individual foldouts include theory, normal operation, operational checks, troubleshooting (including waveforms and/or voltages), and required circuit alignment after repair or replacement.

5-5. INSTRUMENT ACCESS

5-6. For access to the modules or circuit boards in the instrument, remove top and bottom covers. Remove four screws from the cover and slide it towards the rear. To replace cover, reverse procedure.

5-7. PERIODIC MAINTENANCE

a. Monitor all CIRCUIT CHECK meter readings and check these readings against those listed on the front panel door.

b. When the quartz oscillator control voltage exceeds ½ of its dynamic range, the INTEGRATOR LIMIT light will come on; this does not indicate a trouble. When this light comes on, proceed as follows:

1) Set CIRCUIT CHECK switch to CONTROL.
2) Observing the meter, adjust OSC. FREQ. ADJ. COARSE control to zero meter.

c. Over a period of time, the second harmonic signal level as seen on the meter may decay somewhat due to an aging process in the A12 RVFR Assembly. When this second harmonic signal level reaches ½ of its initial value, the instrument should be adjusted to reset the second harmonic signal level. This adjustment is performed as follows:

1) Set front panel OSC. FREQ. ADJ. FINE control to 250.
2) Set CIRCUIT CHECK meter to CONTROL. Observing the meter indication, adjust OSC. FREQ. ADJ. COARSE control for a zero reading.
3) Set FUNCTION switch to LOOP OPEN.
4) Set OSC. FREQ. ADJ. FINE control to 200.
5) Remove instrument top cover. Connect the vertical input of an oscilloscope to A8TP3 and the horizontal input to A8TP2. Use the oscilloscope horizontal amplifier instead of the triggered internal sweep.

6) Adjust Oscilloscope for a pattern similar to Figure 5-2. If waveform looks like Figure 5-1, phase and/or amplitude are misadjusted. Perform Loop Alignment, Paragraphs 5-19 through 5-31. If waveforms look like Figure 5-2 in shape and not necessarily in amplitude, continue to next step.

7) Adjust A3R3 and A3R11 fully ccw, then adjust cw ¼ turn until the oscilloscope pattern just splits. Readjust A3R3 and A3R11 cw slightly to where the pattern is similar to Figure 5-2. Splitting is observed at the lower right and left ends of the waveform.

8) Remove oscilloscope connections and replace top cover. Set OSC. FREQ. ADJ. FINE to 250 and set FUNCTION switch to OPERate.

9) Press LOGIC RESET pushbutton. CONTINUOUS OPERATION light will come on and stay on.

Figure 5-1. A8TP3 Waveform at 200 x 10^{-10} and Phase Misadjusted

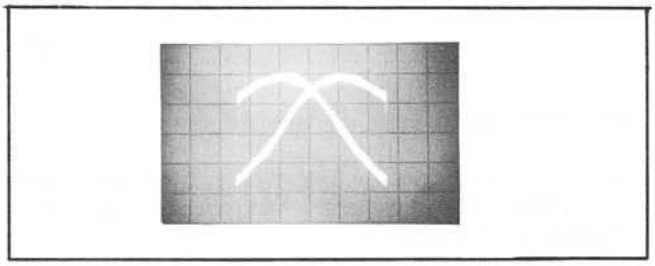

Figure 5-2. A8TP3 Waveform at 200 x 10^{-10} and Phase Correct

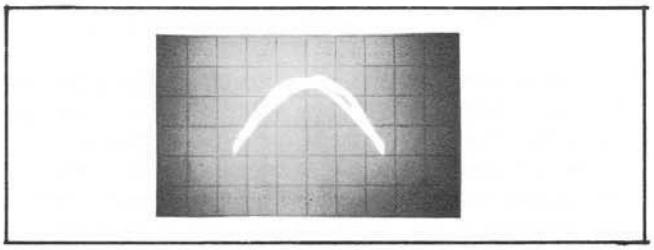

Table 5-2. In-Cabinet Performance Check

1. CIRCUIT CHECK METER CHECK

The circuit checks below involve setting the front panel CIRCUIT CHECK switch to all its positions and observing the corresponding indication on CIRCUIT CHECK meter. Switch positions and normal indications are listed in Table 5-3. Perform the circuit checks as follows: Set CIRCUIT CHECK switch to all its positions. CIRCUIT CHECK meter indications should be as in Table 5-3.

2. OUTPUT FREQUENCIES

Place instrument in operation (CONTINUOUS OPERATION light on, ALARM light off).

Connect 5 MHz from a Primary Frequency Standard as an external time base to an Electronic Counter.

Connect the Counter to each of the following OUTPUTS of the instrument under test:

FRONT PANEL	REAR PANEL
1 MHz	1 MHz
5 MHz	5 MHz
100 kHz	100 kHz

Counter should display the correct frequency, plus or minus the inherent 1-count error of the Counter.

3. OUTPUT VOLTAGES

Place instrument in operation (CONTINUOUS OPERATION light on, ALARM light off).

Connect an RMS Voltmeter through a 50-ohm Feedthru to front panel 5 MHz, 1 MHz, 100 kHz, rear panel 5 MHz, 1 MHz, and 100 kHz output jacks. Voltmeter should indicate between 1.0 and 1.5 Vrms for each frequency checked. Connect the same outputs to the vertical channel of an Oscilloscope. Oscilloscope display should be a clean sine wave.

4. HARMONIC DISTORTION CHECK

Harmonic distortion in the 5 MHz, 1 MHz, and 100 kHz output signals should be at least 40 dB down from the 1 Vrms output. To perform this check, a Spectrum Analyzer is tuned to the fundamental frequency and an amplitude reference is established. The output frequency spectrum is then investigated to determine fundamental-to-sideband amplitude relationship at harmonic points of the fundamental.

Set instrument to normal operation mode (CONTINUOUS OPERATION light on).

Connect equipment shown in Figure 5-3.

Table 5-2. In-Cabinet Performance Check (Cont'd)

Figure 5-3. Harmonic and Non-Harmonic Distortion Test Setup

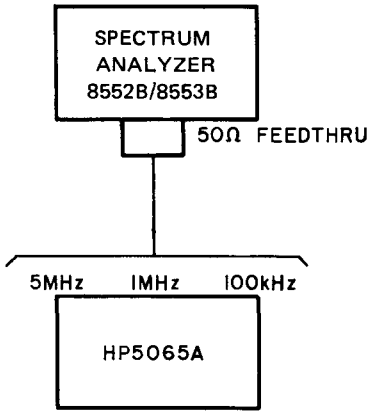

To perform the check proceed as follows:

a. Connect 5 MHz output through 50-ohm Feedthru to Spectrum Analyzer input. Check spectrum at 5 MHz center to 4th harmonic (20 MHz). Harmonics should be below 40 dB.

b. Remove connection from instrument 5 MHz output and connect to 1 MHz output jack. Check spectrum at 1 MHz center to 5th harmonic (5 MHz). Harmonics should be below 40 dB.

c. Remove connection from instrument 1 MHz output and connect to 100 kHz output jack. Check spectrum at 100 kHz center to 50th harmonic (5 MHz). Harmonics should be below 40 dB. Disconnect Spectrum Analyzer from instrument.

5. NON-HARMONIC DISTORTION CHECK

Non-harmonic distortion in the 5 MHz, 1 MHz, and 100 kHz output signals should be at least 80 dB down from the 1 Vrms output. To perform this check, a Spectrum Analyzer is tuned to the fundamental frequency and an amplitude reference is established. The output frequency spectrum is then investigated to determine fundamental-to-sideband amplitude relationship at non-harmonic points in the spectrum.

Set instrument to normal operation mode (CONTINUOUS OPERATION light on).

Connect equipment shown in Figure 5-3.

To perform the check proceed as follows:

a. Connect 5 MHz output through 50-ohm Feedthru to Spectrum Analyzer input. Check spectrum at 5 MHz ±5 kHz. All sidebands should be at least 80 dB below the carrier.

b. Remove connection from instrument 5 MHz output and connect to 1 MHz output jack. Check spectrum at 1 MHz center ±5 kHz. All sidebands should be 80 dB below the carrier.

c. Remove connection from instrument 1 MHz output and connect to 100 kHz output jack. Check spectrum at 100 kHz ±5 kHz. All sidebands, except harmonically related, should be 80 dB below the carrier. Disconnect equiment from instrument.

6. CLOCK PULSE CHECK (OPTION 001 and 003)

a. Pulse Parameters. Connect 5065A 1 PPS output to Oscilloscope vertical input. Set instrument for normal operation (CONTINUOUS OPERATION light on, ALARM light off, DIVIDER MODE switch to AUTO START). Parameters should be as indicated:

Rate: 1 pulse-per second
Amplitude: +10V peak ±10%
Width: 20 μsec minimum
Rise Time: <50 nsec
Fall Time: <2 μsec

b. Pulse Jitter. To verify pulse jitter specification (<5 nS rms pulse to pulse) one of two methods may be used. If the HP Model 5390A system is to be used for checking short term frequency stability, use the procedure described in Method 1 below. If the 5390A system is not available, use the procedure described in Method 2.

Method 1.

In this procedure the Model 9825A Computing Controller is used to control the Model 5345A frequency counter. The counter takes data under the diretion of the Controller. The Controller performs the RMS calculation. Proceed as follows:

(1) Set 5345A front panel controls as
SAMPLE RATE ..... CCW
FUNCTION ... TIME INT. A TO B
GATE TIME ..... MIN
CHANNEL A and B
Input Resistance 1MΩ
ATTEN X20
Coupling ..... DC
SLOPE ..... +
Input ..... COM A

(2) If a cable is connected to Channel B input remove it.

(3) Connect 1 PPS output from 5065A 50 ohm feedthrough termination to the Channel A input of the 5345A. Adjust Channel A and B LEVEL controls so that each channel triggers about in the middle of the pulse (+5V) and the counter displays approximately 1 second.

Table 5-2. In-Cabinet Performance Check (Cont'd)

(4) Remove cassette from 9825A controller and turn power switch off.

(5) Set 9825A controller power switch on and type the following program into controller. Press STORE after each line (do not type line number).

```
0: flt 2
1: dim A[100]
2: wrt 710,"I2F3G5E8I1"
3: wait 50
4: for I=1 to 100
5: red 710,A[I]
6: next I
7: 0→S;0→T
8: for I=1 to 99
9: S+(A[I]-A[I+1])↑2→S
10: T+(A[I]-A[I+1])→T
11: next I
12: √(.01*S-(.01*T)↑2)→D
13: prt "RMS jitter =",D,"sec"
14: end
*29718
```

(6) Press RUN. Controller will take measurements and print results. Measurement takes approximately 200 seconds.

Method 2.

Alternate method for checking pulse jitter. This method uses the HP Model 5370A Time Interval Counter to check pulse jitter. This procedure may be used if the 5345A/9825A combination is not available. The 5370A may also be used to check synchronization and time delay in Section 5 of this performance check.

(1) Connect 5 MHz from 5061A under test to FREQ STD INPUT on 5370A rear panel. Set FREQ STD switch to EXT.

(2) On 5370A turn on AC power, and set START and STOP Channel Controls as follows:

Slope	$_\!\!\!

Table 5-2. In-Cabinet Performance Check (Cont'd)

2. Check TIME DELAY by setting thumbwheel switch to following positions and observing output pulse delay on Time Interval Counter. Time interval change should correspond with switch settings.

7 μs	800 μs	80 ms
8 μs	7 ms	700 ms
70 μs	8 ms	800 ms
80 μs	70 ms	999.999 ms
700 μs		

3. Adjust 0-1 μs TIME DELAY control. Time interval counter should show delay change of 1 μs.

8. FREQUENCY STABILITY OF 5 MHz OUTPUT (Sigma y of Tau)

The rms deviation of the 5 MHz output is measured using the HP Model 5390A Frequency Stability Analyzer option 010, and the Model 105B option H66. This equipment enables measurements of Sigma y of Tau for averaging times as short as 50 ms.

In this procedure measurements will be made with averaging times between 50 msec and 100 seconds. Since the 100 second averaging time measurement takes over 3 hours to complete, this portion of the test may be deleted.

The information given below is designed to be used in conjunction with the 5390A FSA option 010 "Sigma y of Tau" users manual. System connection should be done per this manual. The following information provides the necessary operating parameters to enable the operator to verify the 5065A specification over the measurement range.

The test assumes that the reference standard is an HP Model 5061A with option 004 or another 5065A.

To perform the tests, connect to 5390A FSA System as shown in Figure 5-5. Input information to FSA System as follows:

Step	Data Requested	Input Data
1	Program name	ffddmtd (see Note 1)
2	Max data array size	100
	Max numb. tau's	10
3	Year	Last 2 digits of year
4	Key function	ENTER MEAS PARAMETERS (fo)
	tau	.05 CONTINUE .1 CONTINUE 1 CONTINUE 10 CONTINUE 100 CONTINUE 0 CONTINUE
	number of samples	100
	measurement bandwidth	100,000
	carrier frequency	5e6
	correction coefficient	1.414
5	Key function	START MEASUREMENT (f5)
	Measurement description	5065A s/n Performance Test

Note:

ffddmtd = fractional frequency difference dual-mixer time difference method.

The 5390A will type heading, measurement parameter data, and then proceed with the measurement. Measured values should be equal to or less than the corresponding values given in the specifications, Table 1-1.

Figure 5-5. 5 MHz Output Stability Test Setup

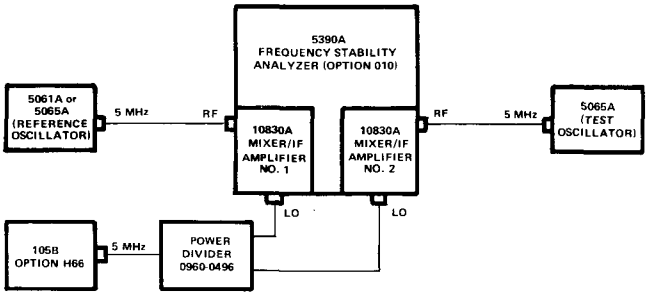

Table 5-2. In-Cabinet Performance Check (Cont'd)

6. FREQUENCY STABILITY CHECK

The specification for long-term frequency stability of the 5065A is less than 1 x 10^{-11} per month. To verify this frequency stability, the 5065A must be compared with a primary fre-frequency standard to observe frequency change over a 30-day period.

a. Refer to Section 3-20, Frequency Offset and Calibration, for instructions on making a phase check between the 5065A and a reference standard.

b. Before proceeding with this check allow a 24-hour warmup.

c. At the beginning of this check adjust the 5065A front panel MAGNETIC FIELD control to set the 5065A frequency within 1 part in 10^{11} of the reference standard frequency.

d. Run this check for 30 days or; make two separate checks with 30 days intervening.

e. Note any change in frequency of the 5065A with respect to the reference standard over the 30-day period. This change should be less than 1 part in 10^{11}.

With practice, the operator will be able to verify frequency stability for most purposes by observing frequency change over a 48-hour period. However, if the 5065A frequency stability specification must be verified, a 30-day check will be required.

5-8. INSTRUMENT TROUBLESHOOTING

5-9. Introduction

5-10. When operational checks indicate a frequency change that is not within specifications for either UTC or A1 time scales according to the setting of the TIME SCALE thumbwheel and HI-LO switches, the following checks should be made prior to servicing:

a. If instrument is operating on A1 time scale, check Synthesizer TIME SCALE thumbwheel switch and HI-LO switch setting against the indicated A1 settings on the A12 RVFR decal.

b. If the instrument is operating on the UTC time scale, check Synthesizer TIME SCALE thumbwheel switch and HI-LO switch settings against the UTC settings on the operating card mounted on the front panel door.

c. Check synthesizer frequency according to the table on foldout page which lists synthesizer output frequencies versus TIME SCALE settings.

NOTE

If CONTINUOUS OPERATION light goes out after instrument has warmed up, the CIRCUIT CHECK meter switch should be set to the LAMP OVEN and CELL OVEN positions. If either meter indication is full scale, the instrument should be turned off immediately. If not, the RVFR Assembly could be damaged by excessive heat.

5-11. In troubleshooting the 5065A, it is helpful to consider the instrument as consisting of 3 sections: (1) RF section, (2) RVFR and, (3) the low-frequency section. These are shown in the simplified block diagram of Figure 5-6.

5-12. The RF Section, by multiplication and synthesis, generates the excitation signals for the RVFR. If the excitation frequencies and power levels are correct, the RVFR Assembly should respond. This response is a 137 Hz signal if the RF excitation is slightly off frequency, and a 274 Hz (2nd Harmonic) signal if the excitation is "on frequency". The RVFR will not operate properly if the cell heater circuit is not working. In the low frequency section, the error signal is amplified and phase detected to give a dc voltage proportional to the excitation frequency error. This error signal is processed by the integrating amplifier and sent to the Quartz oscillator as a control signal to hold the Quartz oscillator at the correct frequency.

5-13. The front panel meter monitors various points in the loop. These are indicated in Figure 8-2. Four of the five input signals to the logic assembly (which can turn off the CONTINUOUS OPERATION light) may be monitored on the CIRCUIT CHECK meter. These are:

a. The 2ND HARMONIC signal
b. The CELL OVEN signal
c. The LAMP OVEN signal
d. The fundamental ERROR signal

The one alarm signal that is not monitored is the "Synthesizer lock" signal.

Figure 5-6. 5065A Simplified Block Diagram

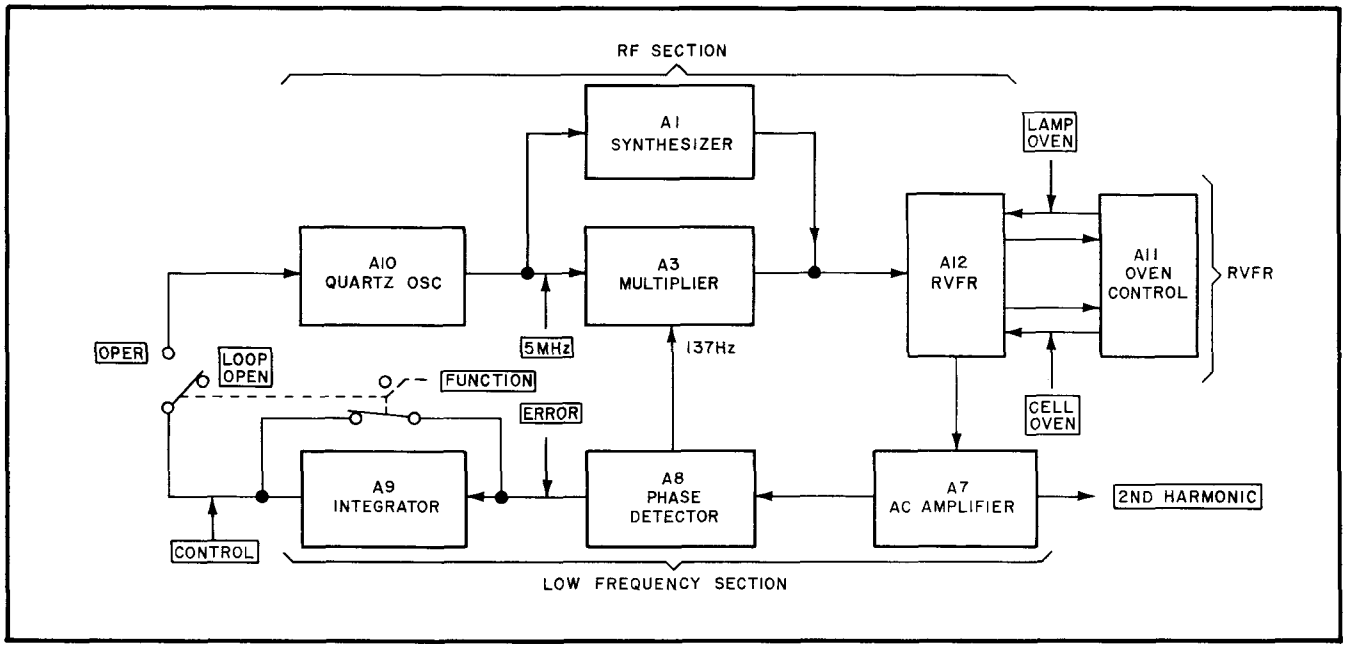

5-14. The FUNCTION switch allows the servo loop to be opened for troubleshooting and instrument alignment. Once the servo loop has been opened, troubleshooting becomes fairly straightforward because the individual circuits can be checked without feedback present.

5-15. Fault Finding

5-16. This section makes extensive use of Table 5-3, CIRCUIT CHECKS, and Table 5-4, SIGNAL CHECKS to provide a means of isolating the fault. For example, if a fault is indicated by the erroneous meter reading, the CIRCUIT CHECKS table provides the necessary tests to further pinpoint the trouble. Where pertinent, the CIRCUIT CHECKS table refers to the SIGNAL CHECKS table for further tests.

5-17. A fault is normally first seen when CONTINUOUS OPERATION light goes off. The first step in finding the trouble is to use the front-panel CIRCUIT CHECK meter. Table 5-3, CIRCUIT CHECKS, provides normal indication, as well as recommended procedure if a meter indication is not correct. The use of this meter together with the recommended procedures of the CIRCUIT CHECKS and SIGNAL CHECKS tables provides a useful first step in isolating a fault.

5-18. There is a small possibility that the 5065A may lose its calibration and go off frequency without turning off the CONTINUOUS OPERATION light. If this occurs: 1) check Synthesizer output frequency (see Section 3-10, Frequency Offset Settings) and, 2) Check for proper operation and setting of the MAGNETIC FIELD control.

Table 5-3. Circuit Checks

Make checks in the order shown with function switch set to OPER and OSC FREQ ADJ FINE set to 250.

NOTE

If all meter readings are normal, but CONTINUOUS OPERATION light will not come on, check: 1) CONTINUOUS OPERATION light bulb, 2) A1 Synthesizer circuit (see foldout, Page 8-13), 3) A14 Logic Assembly (see foldout, Page 8-47).

CIRCUIT CHECK Switch Position	Normal Indication	Nature of Meter Indication	Checks to Make if Reading Abnormal
BATTERY	35 to 45	Meter signal supplied from positive side of internal battery (Option 002 only) through Terminal Board A17(1) to S4(A).	Standby Power Supply maintenance, Paragraph 5-32.
SUPPLY	38 to 42	Meter signal is regulated +20 V from A15 Power Supply through A17(2) to S4(B).	Check A15 Assembly, foldout page Check ac fuse.
LAMP OVEN	10 to 40 After about 1-hour	These signals indicate LAMP and CELL heater currents. These signals vary with ambient temperature. As ambient temperature decreases the meter signals will increase, indicating increased heater current.	NOTE: If either reading is full scale, remove power and allow oven to cool; then effect repairs. CONTINUED OPERATION WITH METER AT FULL SCALE (AFTER INITAL WARMUP) CAN CAUSE DAMAGE TO RVFR ASSY.
CELL OVEN	10 to 45 After about 1-hour	These signals supplied by A11 Temperature Control through A17(3) to S4(C) (LAMP) and through A17(4) to S4(D) (CELL)	Check A11 Assembly, foldout page Note: If cell oven meter reading is zero, loss of signal from RVFR can result
OSC OVEN	35 to 45 (for ambient temperature of 25° C) After about 1-hour	This meter signal indicates power applied to proportional oven in A10 Oscillator Assembly. Routes through A17(5) to S4(E). Normal reading achieved after oven is at operating temperature (about 1-hour)	Check dc power connections to A10 Assembly; then check this section of metering circuit. If all check out, replace A10.
PHOTO I	25 to 50	Meter signal is A12 RVFR photo diode current; routes through A7 Assembly, and through A17(6) to S4(F). Normal reading indicates Rb^{87} lamp is on.	Remove A7P1 and use meter such as HP 412A to measure Photo I directly. Value should be about twice meter reading; 80μa = a 40 meter reading. If measured current and meter reading do not correspond, trouble is in Q1, Q2, or IC1 circuits of A7. If current is much less than 50μa: 1) there is no dc power to A12 RVFR Assembly at A12J16 or, 2) the A12 RVFR Assembly is defective.

Table 5-3. Circuit Checks (Continued)

CIRCUIT CHECK Switch Position	Normal Indication	Nature of Meter Indication	Checks to Make if Reading Abnormal
5 MHz	38 to 42 with no load at front or rear 5 MHz jack	Meter signal comes from A13 Buffer Amplifier through A17(10) to S4(L). Signal represents 5 MHz output; is less when loaded.	If signal is low, but not zero: (1) Check front and rear jacks for loading (meter reading is established with no cables or other loads connected). (2) Perform "Output Voltage and Waveforms" check described in Figure 8-20. If signal is zero: Check 5 MHz signal path from A10(1V) to A3J2, from A3J3 to A13J1, and from A13J2 and J4 to front and rear 5 MHz jacks. Check 5 MHz meter circuit in A13 Buffer Amplifier.
CONTROL	-50 to +50	Meter signal comes from A9 Integrator Amplifier through A17(11) to S4(M) and also to rear panel CONTROL jack. This signal represents the frequency correction voltage that steers the A10 Quartz Oscillator. When this meter signal exceeds about +2.5 V or -5.0 V, INTEGRATOR LIMIT light will come on. When this occurs; set OSC FREQ ADJ COARSE control for zero indication on meter.	Should be reset to zero with OSC FREQ ADJ COARSE (cw to make meter go-). If meter does not respond, set FUNCTION switch to LOOP OPEN. Meter should zero; 1) if it does, perform signal check in Table 5-4, 2) if meter does not zero, check FUNCTION switch circuit, meter circuit, and A9 Integrator Assembly (see foldout, Page 8-33).
ERROR	Zero	Meter signal comes from A8 Phase Detector (filtered from the A12 photo diode output and amplified in A7 (AC Amplifier). This signal is the fundamenntal 137 Hz ac error signal that is zero when "on frequency".	If reading is not normal, switch CIRCUIT CHECK switch to CONTROL and make "Control" checks above.
2ND HARMONIC	20 to 40	Meter signal comes from A14 Logic Assembly through A17(13) to S4(P). This signal represents 274 Hz voltage level from A7 AC Amplifier.	If meter reading has slowly dropped to less than 20, refer to instructions in Paragraph C of PERIODIC MAINTENANCE, Section 5-7. If meter reading has suddenly dropped, indicating a possible trouble in RVFR or RF sections of servo loop, see Table 5-4, SIGNAL CHECKS.
1 MHz and 100 kHz	38 to 42 with no load connected to front and rear jacks	These signals represent the amount of 1 MHz and 100 kHz at front and rear output jacks. 1 MHz signal routes from A6 Freq. Div. through A17(14) to S4(R). 100 kHz signal routes from A4 Freq. Div. through A17(15) to S4(S).	Check front and rear jacks for loads. Push START-AUTO START switch momentarily to START and then release. Signal should come up to proper value. If not, check A4 or A6 circuit as required.

Table 5-4. Signal Checks

The following checks test operation of the RF section, the RVFR section, and the preamplifier and 2nd harmonic detector sections of A7 AC Amplifier.

1. Set FUNCTION switch to LOOP OPEN.
2. Set CIRCUIT CHECK switch to 2ND HARMONIC.
3. Check to be sure OSC FREQ ADJ FINE is set to 250. Adjust OSC FREQ ADJ COARSE slowly over its entire range until an indication is seen on the meter. If no indication is observed, refer to the RVFR check on foldout, Page 8-62.

NOTE

If there is another frequency standard available, it should be used to set the 5065A internal oscillator. This setup will check operation of the OSC FREQ ADJ COARSE control; also it will insure proper frequency setting of the quartz oscillator in A10 Assembly.

CAUTION

THE REFERENCE FREQUENCY STANDARD MUST BE OPERATING ON THE SAME TIME SCALE AS THE 5065A UNDER TEST.

4. If a response is seen, set CIRCUIT CHECK switch to ERROR. Slowly adjust OSC FREQ ADJ COARSE control. As the frequency of the quartz oscillator is adjusted through resonance, the meter will respond as shown in Figure 5-7. If meter response is erratic, check A1 Synthesizer Assembly as described on foldout, Page 8-11.

   Continue adjustment until meter is at the resonant point. Then proceed to step 5.

   If meter does not respond in the preceeding ERROR adjustment, but reacted normally in step 3, check A7 output amplifier circuit, interconnection between A7 and A8, the phase detector circuit in A8, and also the ERROR metering circuit. (See Figure 5-7.)

Figure 5-7. Meter Response in ERROR Position

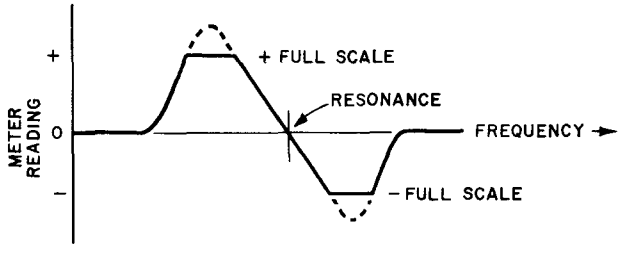

5. Set FUNCTION switch to OPER and CIRCUIT CHECK switch to CONTROL.
6. Control voltage meter indication should remain approximately at 0. If so, continue with step 7.

   If control voltage moves to full scale or wanders around erratically, the following are possible troubles:

   a) No signal connection between A8 and A9 Assemblies.

   b) Defective A9 Assembly (see foldout, Page 8-49).

   c) No signal connection between A9 and A10 Assemblies.

   d) Defective electronic control circuit in A10. If A10 is defective, it must be returned to the factory for repair. See foldout, Page 8-53 for removal instructions.

7. Adjust OSC FREQ ADJ COARSE control about ⅛-turn. CONTROL voltage should move a corresponding amount and then stop. If it does, press LOGIC RESET button. CONTINUOUS OPERATION light will come on; system is OK. If this light does not come on, check A14 Logic Assembly for proper input voltages and circuit operation. (See foldout, Page 8-67, also check A1 Synthesizer as described on foldout, Page 8-11.

Table 5-5. Recommended Test Equipment

Instrument	Required Characteristics	Use	Model
Primary Frequency Standard	Frequency: 5 MHz and 1 MHz Output Level: 1V rms at 50 ohms Accuracy: $\pm 1 \times 10^{-11}$	Performance Check	HP 5061A Option 004
Frequency Stability Analyzer system	Capable of automatically measuring short term frequency fluctuations with averaging times of 10 msec and greater	Performance Check	HP 5390A Opt 010 with HP 1051A (Option H66)
50-ohm Feedthru Termination	50 ohms shunt connections male and female BNC	Performance Check Troubleshooting	HP 11048B
RMS Voltmeter	Voltage Range: .3V to 3V full scale Frequency Range: 10 Hz to 10 MHz Accuracy: ±5% full scale	Performance Check Troubleshooting	HP 3400A
Oscilloscope	Vertical Frequency Response: dc to 50 MHz Sensitivity: .005V/cm Calibrated Sweeps: 2 sec to .05μsec/cm	Performance Check Troubleshooting Adjustments	HP 180 with HP 1820C and HP 1805A HP 10006A Probe
Spectrum Analyzer	Frequency Response: 1 kHz to 110 MHz Response: ±0.5 dB Sensitivity: -130 dBm Scan Width: 2 kHz to 100 MHz Stability: Residual FM less than 20 Hz peak-to-peak	Performance Check	HP 8552B and HP 8553B
Vector Voltmeter**	Frequency: 1 MHz to 1 GHz Voltage Range: 1.5 mV to 1V rms	Performance Check	HP 8405A**
Strip Chart Recorder	Chart Speed: 1, 2, 4, 8, in./hr. Spans: .1, .5, 1, and 5V full scale Input Resistance: 200k/volt Accuracy: .2% full scale	Performance Check	HP 680A
RF Voltmeter	Range: 10 mV to 10V rms Frequency Range: 500 kHz to 60 MHz Accuracy: ±3 full scale	Performance Check Troubleshooting	HP 411A
DC Power Supply	Range: 0 to 20 Vdc Output I: 0 to 1A Line Regulation: 0.001%	Troubleshooting	HP 6101A
Time Interval Counter	Resolution of >2 nsec per measurement	Performance Check	HP 5370A*
DC Electronic Voltmeter	Resistance Range: 10Ω to 10 MΩ Voltage Range: 0.1 to 100V full scale Voltage: ±2% full scale	Performance Check Troubleshooting Adjustments	HP 410C
Phase Comparator**	Frequency Range: 100 kHz to 10 MHz Input Sensitivity: .1V rms Output: 1V into 100KΩ for 360° phase change	Performance Check	K34-59991A**
Clip-on DC Milliammeter	Range: 3 mA to 30 mA Accuracy: ±0.1 mA ±3% full scale	Troubleshooting	HP 428B
Variable Line Source	Variable from 103V rms to 127V rms and 206V rms to 254V rms	Troubleshooting	Superior electric powerstat (115V line) 3PF116 or (230V line) 3PF216
Wave Analyzer	B.W. 10 Hz Frequency: 137 Hz Sensitivity: 100 nV	Troubleshooting	HP 3581A

*Not needed if HP 5390A Frequency Stability Analyzer available.
**The Model 8405A or the Model K34-59991A may be used for frequency offset and comparison measurements. It is not necessary to have both equipments.

5-19. LOOP ALIGNMENT PROCEDURE

5-20. Introduction

5-21. If any loop adjustment has been changed, the frequency stabilizing loop of the 5065A should be re-aligned according to the procedures of the following sections. Allow at least 3 hours warmup to permit all circuits to become fully stabilized before proceeding with this alignment. The loop adjustments are as follows:

5-22. +20 Volt Adjustment (A15 Power Supply and Regulator Assembly)

5-23. With power disconnected, remove A15 Power Supply circuit board. Mount it on an extender board. Connect power, and after a few minutes warmup, monitor +20 volts at A15C5. Adjust A15R17 as necessary. Be sure to disconnect line power before replacing the A15 Power Supply circuit board.

5-24. A10 Frequency Adjustment

a. Set controls: FUNCTION switch at LOOP OPEN OSC FREQ ADJ FINE at 250.

b. Connect oscilloscope vertical input to A8TP3. Connect oscilloscope horizontal input to the sweep test output A8TP2. Set horizontal gain for about a 5 cm horizontal sweep. Set vertical gain at about .05 volts/cm through a 10:1 divider probe.

c. Adjust A3R3, A3R11 full ccw then cw ¼ turn. Using a screwdriver, adjust front-panel OSC FREQ ADJ COARSE slowly until an oscilloscope pattern roughly similar to Figure 5-8 appears. This oscilloscope response is an indication that the 5065A is turned near resonance.

Figure 5-8. Waveform at A8TP3 with Severe Phase Shift

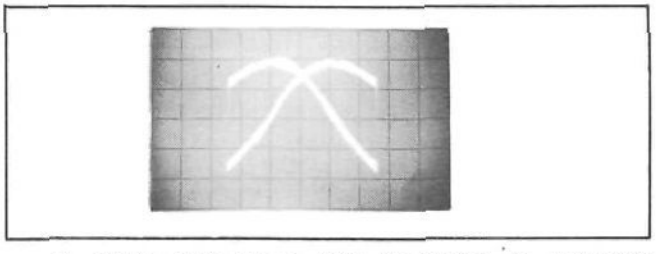

d. Note that when A10 Oscillator is adjusted through resonance, the oscilloscope pattern will change from a positive hump to a straight line (which is the resonance center); and then to a negative hump. Adjust OSC FREQ ADJ COARSE for the straight line center-resonance position between the positive and negative humps.

e. Set OSC FREQ ADJ FINE at 200 for a 50 x 10^{-10} frequency offset. An oscilloscope pattern similar to Figure 5-8 or 5-10 will appear.

f. Make a preliminary phase adjustment if necessary. Adjust A8R43 (on top of A8 board) so the ends of the waveform come together as shown in Figure 5-10.

5-25. RF Alignment

a. Remove bottom cover for access to chassis bottom. Remove A5 Assembly if Option 001 is installed for access to the multiplier adjustments. Note that removal of the A5 Assembly in no way affects operation of the rest of the 5065A circuits.

b. Figure 5-9 shows the RF alignment test equipment setup.

c. Before proceeding locate the resonance signal and set up a frequency offset as described in Paragraph 5-24.

Figure 5-9. R.F. Alignment Setup

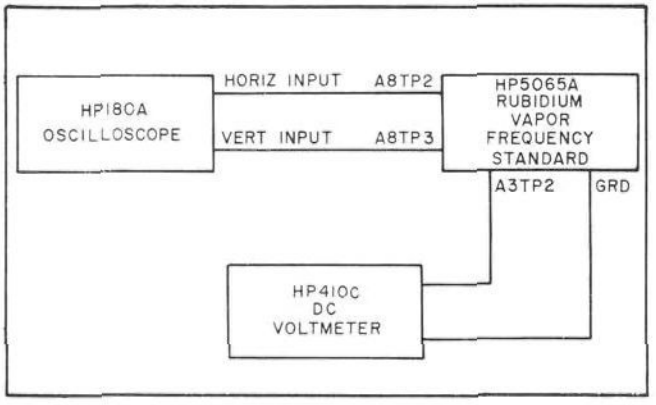

d. Adjust A3R3 on the Multiplier Assembly for maximum amplitude of the oscilloscope signal. Then adjust A3R3 ccw until the oscilloscope pattern amplitude is reduced by ½ to prevent RVFR and amplifier saturation during this alignment.

Figure 5-10. Oscilloscope Indication at Resonance with A8R43 (Modulating Phase Adjustment) correctly adjusted

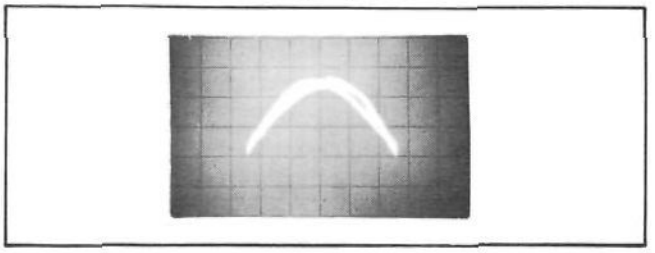

e. Adjust A8R43 (adjustment facing top of A8 board) for minimum phase shift on the wave form. A pattern without phase shift is shown in Figure 5-10. Phase shift will split the pattern at the two ends as in Figure 5-8.

f. Phase modulation adjustment. Adjust A3R11 cw until the oscilloscope pattern just reaches a maximum, then adjust A3R11 slightly ccw so the pattern is reduced by 5 or 10%.

NOTE

It may be necessary to readjust A8R43 for minimum phase shift.

g. On the chassis-bottom side of the unit, note the short jumper cable connected between J7 and J8 of the A3 Multiplier. Disconnect this jumper from A3J8 and note that the oscilloscope pattern will disappear.

h. Using the Micon-to-BNC test cable provided, connect a 50-ohm coaxial load to A3J8.

i. At the bottom of the A3 Multiplier is AGC testpoint A3TP2. Connect a dc voltmeter between this point and ground. Record the reading. Nominal AGC voltage is about +4.5 volts.

j. Remove the 50-ohm load from A3J8. Reconnect the short jumper cable to A3J8. The oscilloscope pattern will reappear. Leave the dc voltmeter connected to A3 TP2 so that the AGC voltage may be monitored.

NOTE

The following adjustments may peak the signal at several different points. In tuning you should select peaks which are fairly broad and easy to tune. In addition to easier tuning, this ensures maximum RF power stability over the specified operating temperature range of the 5065A.

k. The next step is the adjustment of matching network adjustments A3C59, A3C61, A3L25, and diode bias adjustment, A3R40. These adjustments are at the side of the A3 Multiplier Assembly and can be reached with the A5 Digital Divider removed. The restricted space calls for shortened tuning tools. A small mirror will be helpful. Adjust A3C59, A3C61, A3L25, and A3R40 for maximum signal on the oscilloscope. Ensure the AGC voltage does not fall below the value recorded. If it does, retune these adjustments as necessary. During this adjustment, the oscilloscope pattern should remain rounded at the top. If any clipping or distortion occurs, the RF drive should be reduced slightly by adjustment of A3R3. This adjustment will be reset later in this procedure.

l. Adjust A3R3 ccw. The pattern on the oscilloscope screen will get smaller. Continue to adjust A3R3 ccw with oscilloscope set to .02 V/cm through a 10:1 probe until there is just enough definition at the ends of the oscilloscope pattern to make a phase adjustment (typical level .03 V). Now adjust A8R43 so that the ends of the oscilloscope pattern coincide. When this adjustment is properly made the oscilloscope pattern will look similar to Figure 5-10 with the ends of the pattern coinciding, but with less amplitude. Adjust A3R3 cw until a phase shift starts (the end of the oscilloscope pattern just start to split).

m. Repeat step k to ensure the matching network (A3C59, A3C61, and A3L25) and diode bias (A3R40) are optimized. RF alignment is complete when (1) A3R3 is adjusted as far cw as possible without a phase shift occurring; (2) A3C59, A3C61, A3L25, and R3R40 are adjusted for a broad peak and maximum amplitude signal; (3) after the preceding adjustments the AGC voltage is not less than the value recorded in step i; (4) the signal-to-noise ratio (see Section 5-26) is greater than 250.

n. Connect HP 302A to A7TP2. Set HP 302A MODE SELECTOR to BFO and adjust FREQUENCY control to 137 Hz. Set MODE SELECTOR to AFC; SCALE VALUE to ABSOLUTE, 300 mV full scale. Read 137 Hz signal level; typical correct level should be 130 to 160 mV.

o. Disconnect all test equipment and set OSC FREQ ADJ FINE to 250.

5-26. Signal-to-Noise Ratio

a. This test requires the use of a low frequency wave analyzer such as an HP 3581A (if another wave analyzer is to be used, see step m).

NOTE

The purpose of this test is to insure that the signal-to-noise ratio of the RVFR, as installed in the instrument, is sufficient to give the Model 5065A its specified short-term stability. This test is not critical to the alignment of the 5065A and may be ignored insofar as alignment is concerned.

b. Set front-panel controls: OSC FREQ ADJ FINE at 250, FUNCTION switch . . . at LOOP OPEN.

c. Connect a dc voltmeter to A8TP3.

d. Adjust OSC FREQ ADJ COARSE for a reading of less than ±0.05 volt.

e. Remove voltmeter from A8TP3.

f. Set OSC FREQ ADJ FINE at 300.

g. Set 5381A controls:

POWER ..... ON
SCALE ..... VOLTS
AMPLITUDE REF LEVEL ..... NORMAL
dBv/LIN - dBm ..... dBv/LIN
INPUT SENSITIVITY
..... 3V (VERNIER TO CAL)
SWEEP MODE ..... OFF
RESOLUTION BANDWIDTH ..... 10 Hz
DISPLAY SMOOTHING ..... MAX
FREQUENCY ..... 137 Hz

h. Connect a 100KΩ resistor across the 3581A input terminals. Type, tolerance or rating of this resistor is not important in this application.

i. Connect 3581A input to A7TP2. Connect 3581A ground to 5065A chassis. Adjust 3581A FREQUENCY and INPUT SENSITIVITY for a maximum on-scale reading. Record this reading as V_S. It should be approximately 150 mV.

j. Disconnect the +20-volt red lead from the A3 Multiplier Assembly.

k. Set 3581A AMPLITUDE REFERENCE control to X.001. Noise reading should be in mid or lower half of scale. Meter should not peg on noise peaks. Adjust INPUT SENSITIVITY if necessary to achieve this. OVERLOAD light should remain out.

l. 3581A reading will be noisy. Watch meter for about 20 seconds to estimate the average reading. Record this reading as V_n. Typical value is approximately 300 μV.

m. Multiply this reading by 0.72 and divide into V_s measured in step i. Note: the .72 factor converts the noise measured in the 3581A's 10 Hz resolution bandwidth (11.5 Hz noise bandwidth) to equivalent noise in a 6 Hz noise bandwidth. If another analyzer is used its noise measurement must be converted by use of the formula

$$V_n \sqrt{\frac{6}{B}}$$

where B = the noise bandwidth of the analyzer used for the measurement, and V is the measured noise voltage. Signal-to-noise ratio is given by

$$S/n = \frac{V_s}{.72 \times V_n}$$

For satisfactory operation, the signal-to-noise ratio should be 250 or greater. Low signal-to-noise ratio can be caused by improper alignment of the RF matching network in the A3 Multiplier Assembly or insufficient 137 Hz phase modulation (see step f of Section 5-25, RF Alignment, the preceding section).

n. Reconnect +20V red lead to the A3 Multiplier Assembly. Set OSC FREQ ADJ FINE Control at 250.

5-27. Modulation Frequency Adjustment

a. Connect a frequency counter to A8TP2 and measure the frequency. If the frequency is between 136 Hz and 138 Hz do not make any adjustments.

b. If frequency of step a is outside 137 Hz ±1 Hz range. adjust A8R8 for a frequency of 137 Hz ±1 Hz.

5-28. Phase Adjustment Recheck

a. Before proceeding further, locate the resonance signal and set up a frequency offset as described in Section 5-24, Frequency Adjustments.

b. If the oscilloscope pattern is split (out of phase) readjust A8R43 until the pattern looks like Figure 5-10.

c. Remove oscilloscope connections.

5-29. Phase Detector and Integrator Zero Adjustment

a. Set FUNCTION switch to LOOP OPEN.

b. Disconnect yellow lead (slide-on connector) from A7 AC Amplifier.

c. Connect a dc voltmeter to A8TP3, and adjust A8R35 for a reading of less than 1 mV dc.

d. Disconnect dc voltmeter from A8TP3 and connect it to CONTROL jack on the rear panel.

e. Connect a short jumper between pins 14 and 15 on A9 Assembly socket (XA9) to short the A9 input.

f. Set FUNCTION switch to OPER and measure dc voltage at the rear panel CONTROL jack.

g. The voltage of the previous step will probably be drifting slightly. Adjust A9 Integrator zero control R10 (FINE) to stop this drift. If R10 does not have sufficient range to stop the drift, then R3 (COARSE) should be adjusted to bring R10 into range. To use the dc voltmeter on a lower range for finer adjustment, set FUNCTION switch to LOOP OPEN and then back to OPER. This will discharge the integrating capacitor and set the control voltage near zero. Observe the control voltage for a short period of time. If the drift exceeds 20 mV/minute, repeat the zeroing adjustments.

h. Remove shorting jumper from XA9 (14 and 15). Reconnect the yellow wire slide-on connector to A7. Dc voltmeter may be left connected for the next step.

5-30. Loop Gain Adjustment

a. Check that the dc voltmeter is connected to rear-panel CONTROL jack and that controls are set as follows:

FUNCTION ..... OPER
OSC FREQ ADJ FINE 250

b. Observing the dc voltmeter, adjust OSC FREQ ADJ COARSE for less than 100 mV at the CONTROL jack.

c. Set FUNCTION switch to LOOP OPEN and connect the dc voltmeter to A8TP3.

d. Set OSC FREQ ADJ FINE to 200 and then adjust A7R17 for a reading of +0.5 ±.05 volts on the dc voltmeter.

e. Adjust OSC FREQ ADJ FINE to 300. Dc voltmeter should read approximately -.5 volts. If the reading is off appreciably, repeat this procedure.

f. Set OSC FREQ ADJ FINE at 250 and remove the dc voltmeter connections.

5-31. Logic Assembly (A14) Alignment

a. Remove the A14 Logic Assembly circuit board and mount it on the extender board provided. It is not necessary to remove power when removing this board.

b. Set front-panel controls as follows:

FUNCTION ..... OPER
OSC FREQ ADJ FINE 250
CIRCUIT CHECK switch .. 2ND HARMONIC

c. Connect a dc voltmeter to A14(1) and adjust A7R29 for a reading of +4.0 volts on the dc voltmeter. With this adjustment, the CIRCUIT CHECK meter reading (2ND HARMONIC) should be between 36 and 44.

d. Connect a jumper between XA9 pins 10 and 12 (bottom of chassis). Set OSC FREQ ADJ FINE at 310 and then adjust A14R8 just to the point where the CONTINUOUS OPERATION light is extinguished. Leave the jumper connected for the following checks:

e. Make the following checks of the A14 Logic Assembly:

1) Set OSC FREQ ADJ FINE at 250. Then press the LOGIC RESET button. CONTINUOUS OPERATION light should come on. Turn the OSC FREQ ADJ FINE control slowly cw and note when the CONTINUOUS OPERATION light extinguishes. The OSC FREQ ADJ FINE reading should be between 300 and 320. If not, repeat step a.

2) Remove jumper from XA9, reset OSC FREQ ADJ FINE to 250, and press the LOGIC RESET button. The CONTINUOUS OPERATION light should come on. Leave jumper disconnected.

3) Remove the cable from A3J1 (bottom of chassis). The CONTINUOUS OPERATION light should go out after about 5 seconds.

4) Reconnect the cable to A3J1 and press LOGIC RESET button. CONTINUOUS OPERATION light should come on.

5) Connect a dc VTVM such as a HP 412A to the CONTROL jack at the rear of the unit.

6) Adjust OSC FREQ ADJ COARSE slowly ccw. INTEGRATOR LIMIT light should come on between +2 and +4 volts as read on the meter.

7) Adjust OSC FREQ ADJ COARSE slowly cw. INTEGRATOR LIMIT light should come on between -4 and -7 volts.

8) Adjust OSC FREQ ADJ COARSE for a zero reading and then disconnect VTVM. This completes the procedure.

5-32. OPTION 002, Standby Power Supply Maintenance

5-33. To insure maximum battery capacity the internal battery should be "exercised" at least every 90 days. To exercise the battery, disconnect the instrument power cord from ac power source. The front-panel BATTERY lamp will flash on and off to indicate ac power line failure. Operate the 5065A for 10 minutes, then reconnect the instrument to the ac power source. Set the "Battery" switch to RESET, then to FAST-CHARGE for at least 16 hours.

5-34. BATTERY lamp should be on for this time period. At the end of the charge period set the "Battery" switch to FLOAT.

NOTE

Several exercise cycles may have to be performed if the internal battery is left in TRICKLE CHARGE mode for long periods of time.

The meter reading in BATTERY position should be between 30 and 50.

5-35. During FAST CHARGE cycle, connect a clip-on milliammeter to the orange lead (+) of the internal battery. Charging current should be 90 to 150 mA. Set the BATTERY switch to FLOAT position. Current should be 12 to 34 mA depending on battery condition and line voltage.

5-36. If the internal battery supply fails to maintain a charge after several charge-discharge cycles, verify that the charging current is sufficient (Paragraph 5-35). If the current is as listed in Paragraph 5-35, replace the internal battery. Troubleshooting information for the A2 Battery Charger Board Assembly is located with the A2 schematic in Section VIII.

5-37. Battery Removal and Replacement

a. Disconnect instrument from ac and/or dc power source, and remove top and bottom covers.

b. With instrument on its side remove internal battery fuse (F4) to electrically disconnect the internal battery. Do not reinstall the fuse.

c. Unsolder orange No. 14 AWG wire from XA2(4).

d. Unsolder brown No. 14 AWG wire from capacitor C1.

e. Remove 6 Hex-nuts securing the battery cover and battery to instrument chassis.

f. Remove the battery and cover.

g. Unsolder orange wire from the + terminal of the battery and brown wire from the - terminal of the battery.

h. To install a new battery perform steps a to g in reverse order. When step b is performed, reinstall the fuse.

5-38. CLOCK DISPLAY ASSEMBLY A19

5-39. The A19 LED Clock Display Assembly has no adjustments and requires no periodic maintenance. Should repair be necessary, the unit may be removed and operated on the bench while remaining connected to the instrument. When operating in this manner, however, the Clock Display chassis or circuit common **must be connected to the instrument chassis** with a CLIP LEAD OR JUMPER WIRE.

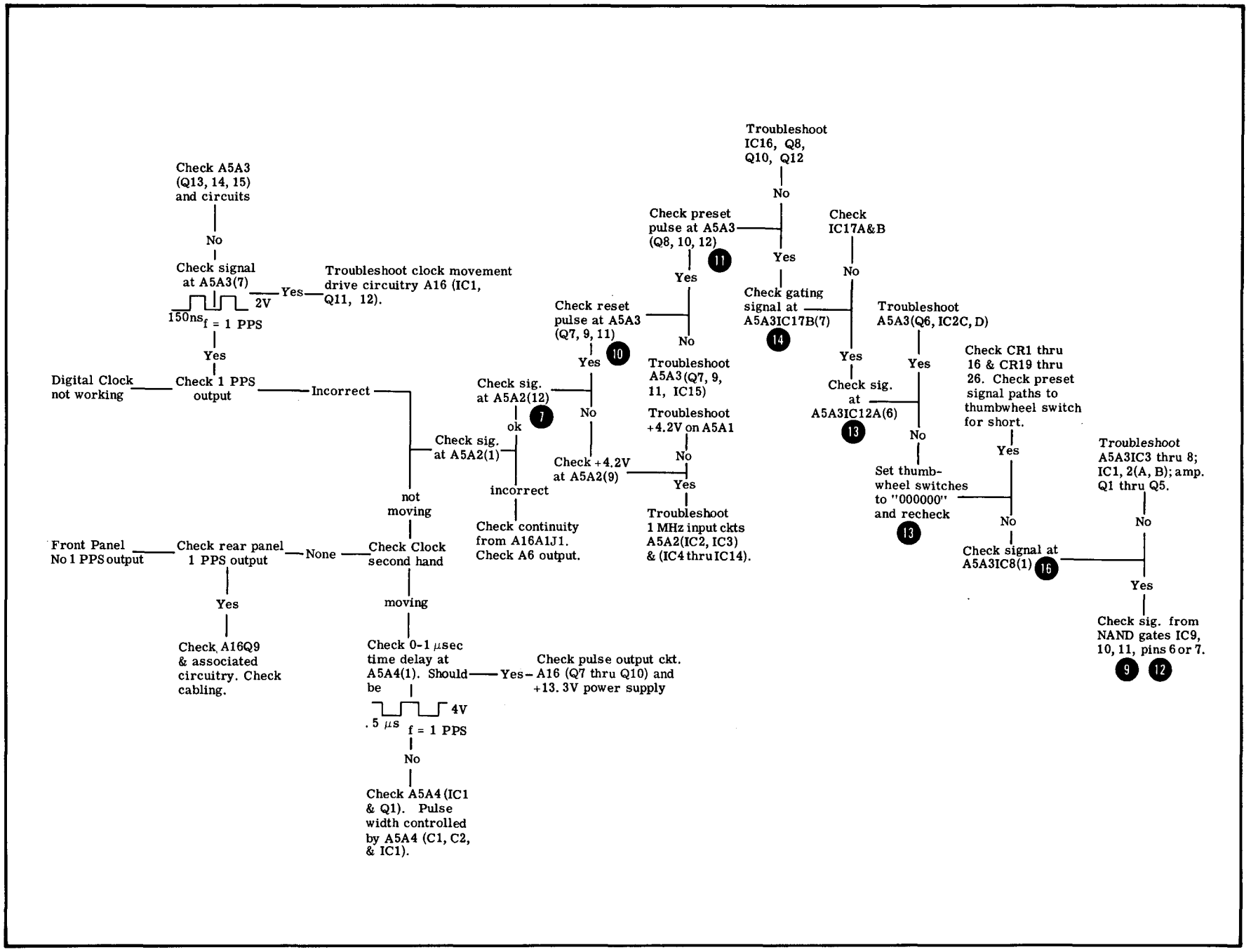

Table 5-6. A5 Troubleshooting

Hewlett-Packard Model 5065A
Rubidium Vapor Frequency Standard

Serial No.____ - _____

Tests Performed by _____

Date _____

PERFORMANCE CHECKS

	Description	Check	
1.	CIRCUIT CHECK Meter	☐	See Table 5-3
2.	5 MHz, 1 MHz, 100 kHz Outputs	☐	Correct Frequency
3.	Output Voltages/Waveforms	☐	at least 1 V rms.
4.	Harmonic Distortion	☐	40 dB
5.	Non-Harmonic Distortion	☐	80 dB
6.	Frequency Stability	☐	1×10^{-11}
7.	Option 001 Time Standard	☐	Rate: 1PPS Width: 20μsec Level: +10 V p-p +10% Rise Time: 50 nsec Fall Time: 1μsec Jitter: 1 nsec Delay: 10μsec to 1 sec
8.	RMS Deviation:		
	1 sec averaging	☐	5×10^{-12}
	10 sec averaging	☐	1.6×10^{-12}
	100 sec averaging	☐	5×10^{-13}

SECTION VI

REPLACEABLE PARTS

6-1. INTRODUCTION

6-2. This section contains parts number information needed to order replacement parts. Table 6-2 to 6-6 lists parts by assembly reference designation and/or by option number/assembly designation. The part numbers also provide the following information on each part:

a. Description of part (see abbreviations in Table 6-1).

b. Typical manufacturer of the part in a five-digit code; see list of manufacturers in Table 6-7.

c. Manufacturer's part number.

d. Total quantity used in the instrument (TQ column).

6-3. Miscellaneous parts are listed at the end of each table.

6-4. ORDERING INFORMATION

6-5. To obtain replacement parts, address order of inquiry to the nearest Hewlett-Packard Sales and Service Office (see lists at rear of this manual for addresses). Identify parts by their Hewlett-Packard part numbers.

6-6. To obtain a part not listed, include:

a. Instrument model number.

b. Instrument serial number.

c. Description of the part.

d. Function and location of the part.

Table 6-1. Table of Abbreviations

REFERENCE DESIGNATORS

A = assembly	F = fuse	MP = mechanical part	U = integrated circuit
B = motor	FL = filter	P = plug	V = vacuum, tube, neon bulb, photocell, etc.
BT = battery	IC = integrated circuit	Q = transistor	
C = capacitor	J = jack	R = resistor	VR = voltage regulator
CP = coupler	K = relay	RT = thermistor	W = cable
CR = diode	L = inductor	S = switch	X = socket
DL = delay line	LS = loud speaker	T = transformer	Y = crystal
DS = device signaling (lamp)	M = meter	TB = terminal board	Z = tuned cavity, network
E = misc electronic part	MK = microphone	TP = test point	

ABBREVIATIONS

A = amperes	H = henries	N/O = normally open	RMO = rack mount only
AFC = automatic frequency control	HDW = hardware	NOM = nominal	RMS = root-mean square
AMPL = amplifier	HEX = hexagonal	NPO = negative positive zero (zero temperature coefficient)	RWV = reverse working voltage
	HG = mercury		
BFO = beat frequency oscillator	HR = hour(s)		S-B = slow-blow
BE CU = beryllium copper	HZ = hertz	NPN = negative-positive-negative	SCR = screw
BH = binder head			SE = selenium
BP = bandpass	IF = intermediate freq	NRFR = not recommended for field replacement	SECT = section(s)
BRS = brass	IMPG = impregnated		SEMICON = semiconductor
BWO = backward wave oscillator	INCD = incandescent	NSR = not separately replaceable	SI = silicon
	INCL = include(s)		SIL = silver
CCW = counter-clockwise	INS = insulation(ed)	OBD = order by description	SL = slide
CER = ceramic	INT = internal	OH = oval head	SPG = spring
CMO = cabinet mount only	K = kilo = 1000	OX = oxide	SPL = special
COEF = coefficient		P = peak	SST = stainless steel
COM = common	LH = left hand	PC = printed circuit	SR = split ring
COMP = composition	LIN = linear taper	PF = picofarads = 10^{-12} farads	STL = steel
COMPL = complete	LK WASH = lock washer		TA = tantalum
CONN = connector	LOG = logarithmic taper	PH BRZ = phosphor bronze	TD = time delay
CP = cadmium plate	LPF = low pass filter	PHL = Phillips	TGL = toggle
CRT = cathode-ray tube	M = milli = 10^{-3}	PIV = peak inverse voltage	THD = thread
CW = clockwise	MEG = meg = 10^{6}	PNP = positive-negative-positive	TI = titanium
DEPC = deposited carbon	MET FLM = metal film	P/O = part of	TOL = tolerance
DR = drive	MET OX = metallic oxide	POLY = polystyrene	TRIM = trimmer
ELECT = electrolytic	MFR = manufacturer	PORC = porcelain	TWT = traveling wave tube
ENCAP = encapsulated	MHZ = mega hertz	POS = position(s)	U = micro = 10^{-6}
EXT = external	MINAT = miniature	POT = potentiometer	VAR = variable
F = farads	MOM = momentary	PP = peak-to-peak	VDCW = dc working volts
FH = flat head	MOS = metal ozide substrate	PT = point	
FIL H = fillister head	MTG = mounting	PWV = peak working voltage	W/ = with
FXD = fixed	MY = "mylar"		W = watts
G = giga (10^{9})	N = nano (10^{-9})	RECT = rectifier	WIV = working inverse voltage
GE = germanium	N/C = normally closed	RF = radio frequency	
GL = glass	NE = neon	RH = round head or right hand	WW = wirewound
GRD = ground(ed)	NI PL = nickel plate		W/O = without

01194-14

Figure 6-1. Modular Cabinet Parts

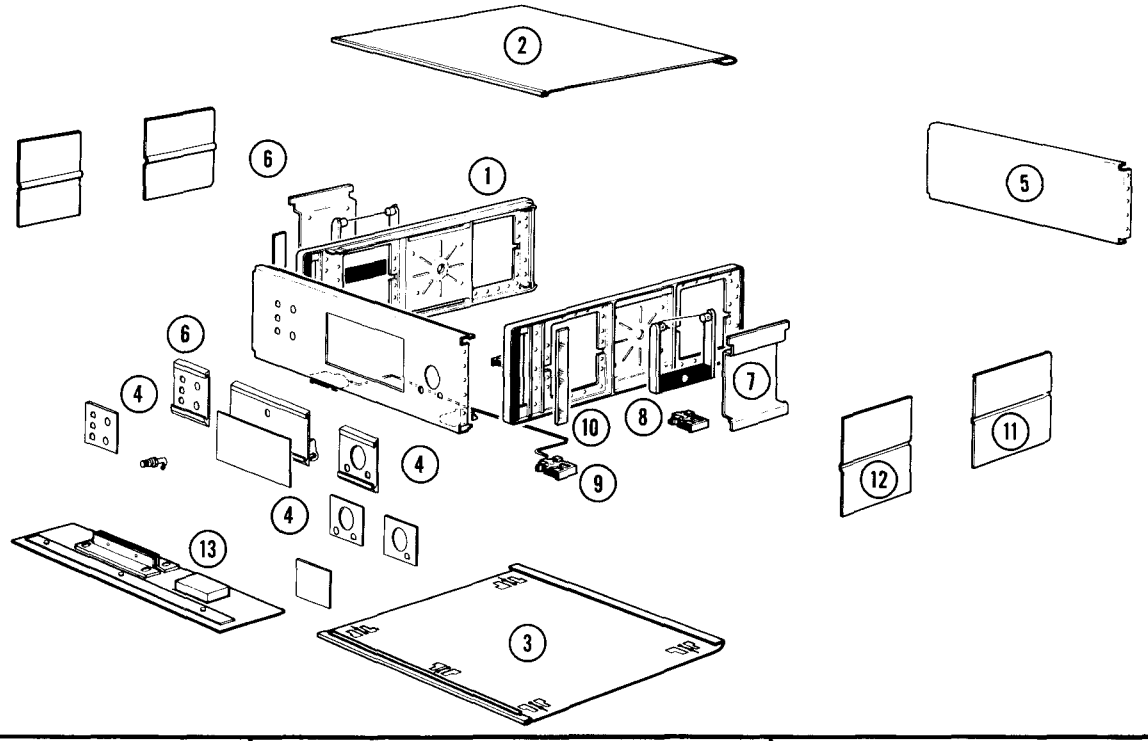

Item No.	Description	HP Part Number
1	Side Frame Assembly	5060-0732
2	Cover: Top	05061-2041
3	Cover: Bottom	05065-2048
4	Panel: Front	05065-0008
	Panel: Left Insert	05065-0050
	Door	05065-2018
	Door Panel	05054-0051
	Latch	05010-0582
	Plate, Center	05061-2022
	Standard Panel Insert	05065-0052
	Panel Option 001 Insert	05061-0022
	Panel Option 002 Insert	05065-0053
5	Panel: Rear	05065-0009
6	Plate: Left Panel	05065-2017
7	Retainer: 5½" Mod. Handle	5060-0766
8	Handle: 5H Side	5060-0222
9	Foot Assembly: FM	5060-0767
10	Trim Strip	5000-0051
11	Rear Side Plate Cover	5000-0738
12	Front Side Plate Cover	5000-0739
13	Kit: 5H Rack Mount	5060-0775

Table 6-2. Replaceable Parts

Reference Designation	HP Part Number	C D	Qty	Description	Mfr Code	Mfr Part Number
A1	05065-6076	2	1	MODULE ASSEMBLY,SYNTHESIZER(SERIES 1908)	28480	05065-6076
A1B1	3100-2652	9	1	SWITCH-THUMBWHEEL 4 MOD; 1-2-4-8 BCD (INCLUDES S1A, B,C,D,	28480	3100-2652
A1B2	3101-0045	2	1	SWITCH-SL DPDT STD .5A 125VAC/DC	28480	3101-0045
				A1 MISCELLANEOUS PARTS		
A1Y1	0410-0162	6	1	CRYSTAL-QUARTZ 5.315 MHZ	28480	0410-0162
	0340-0119	4	2	TERMINAL-STUD SGL-PIN PRESS-MTG	28480	0340-0119
	0510-0207	2	2	THREADED INSERT-STDF 4-40 .188-LG STL	28480	0510-0207
	1250-0901	2	5	CONNECTOR-RF SMB M SGL-HOLE-FR 50-OHM	28480	1250-0901
	05065-0035	0	1	COVER, SYNTHESIZER	28480	05065-0035
	05060-0007	6	1	BRACKET, END	28480	05060-0007
	05065-2032	6	1	PLATE, END	28480	05065-2032
	05065-0036	2	1	CHASSI, SYNTHESIZER	28480	05065-0036
	05065-2043	9	1	PLATE, END	28480	05065-2043
A1A1	05065-6073	6	1	BOARD ASSEMBLY, SYNTHESIZER (NOT FOR REPLACEMENT) FOR REPLACEMENT ORDER 05065-6076	28480	05065-6073
A1A1C1	0150-0121	5	22	CAPACITOR-FXD .1UF +80-20% 50VDC CER	28480	0150-0121
A1A1C2*	0140-0223	7	1	CAPACITOR-FXD 260PF +-1% 300VDC MICA	72136	DM15F261F0300WV1C
A1A1C3*	0160-0127	2	10	CAPACITOR-FXD 1UF +-20% 25VDC CER	28480	0160-0127
A1A1C4				DELETED		
A1A1C9				DELETED		
A1A1C10	0140-0192	9	1	CAPACITOR-FXD 68PF +-5% 300VDC MICA	72136	DM15E680J0300WV1CR
A1A1C11				DELETED		
A1A1C15	0160-0127	2		CAPACITOR-FXD 1UF +-20% 25VDC CER	28480	0160-0127
A1A1C16	0150-0121	5		CAPACITOR-FXD .1UF +80-20% 50VDC CER	28480	0150-0121
A1A1C17	0150-0121	5		CAPACITOR-FXD .1UF +80-20% 50VDC CER	28480	0150-0121
A1A1C18	0140-0160	1	1	CAPACITOR-FXD 3400PF +-5% 500VDC MICA	72136	DM20F342J0500WV1CR
A1A1C19	0140-0196	3	2	CAPACITOR-FXD 150PF +-5% 300VDC MICA	72136	DM15F151J0300WV1CR
A1A1C20	0140-0225	9	1	CAPACITOR-FXD 300PF +-1% 300VDC MICA	72136	DM15F301F0300WV1C
A1A1C21	0160-0174	9	11	CAPACITOR-FXD .47UF +80-20% 25VDC CER	28480	0160-0174
A1A1C22	0180-0291	3	8	CAPACITOR-FXD 1UF+-10% 35VDC TA	56289	150D105X9035A2
A1A1C23	0150-0121	5		CAPACITOR-FXD .1UF +80-20% 50VDC CER	28480	0150-0121
A1A1C24	0180-0291	3		CAPACITOR-FXD 1UF+-10% 35VDC TA	56289	150D105X9035A2
A1A1C26	0160-0174	9		CAPACITOR-FXD .47UF +80-20% 25VDC CER	28480	0160-0174
A1A1C27	0150-0121	5		CAPACITOR-FXD .1UF +80-20% 50VDC CER	28480	0150-0121
A1A1C28	0160-0174	9		CAPACITOR-FXD .47UF +80-20% 25VDC CER	28480	0160-0174
A1A1C29	0150-0093	0	16	CAPACITOR-FXD .01UF +80-20% 100VDC CER	28480	0150-0093
A1A1C30	0160-0127	2		CAPACITOR-FXD 1UF +-20% 25VDC CER	28480	0160-0127
A1A1C31	0160-0127	2		CAPACITOR-FXD 1UF +-20% 25VDC CER	28480	0160-0127
A1A1C32	0150-0121	5		CAPACITOR-FXD .1UF +80-20% 50VDC CER	28480	0150-0121
A1A1C33	0140-0234	0	2	CAPACITOR-FXD 500PF +-1% 300VDC MICA	72136	DM15F501F0300WV1C
A1A1C34	0140-0179	2	3	CAPACITOR-FXD 1000PF +-2% 300VDC MICA	72136	DM19F102G0300WV1CR
A1A1C35	0150-0093	0		CAPACITOR-FXD .01UF +80-20% 100VDC CER	28480	0150-0093
A1A1C36	0150-0093	0		CAPACITOR-FXD .01UF +80-20% 100VDC CER	28480	0150-0093
A1A1C37	0160-0127	2		CAPACITOR-FXD 1UF +-20% 25VDC CER	28480	0160-0127
A1A1C38	0150-0093	0		CAPACITOR-FXD .01UF +80-20% 100VDC CER	28480	0150-0093
A1A1C39	0150-0093	0		CAPACITOR-FXD .01UF +80-20% 100VDC CER	28480	0150-0093
A1A1C40	0180-0106	9	4	CAPACITOR-FXD 60UF+-20% 6VDC TA	56289	150D606X0006B2
A1A1C41	0180-0155	8	1	CAPACITOR-FXD 2.2UF+-20% 20VDC TA	56289	150D225X0020A2
A1A1C42	0150-0121	5		CAPACITOR-FXD .1UF +80-20% 50VDC CER	28480	0150-0121
A1A1C43	0140-0234	0		CAPACITOR-FXD 500PF +-1% 300VDC MICA	72136	DM15F501F0300WV1C
A1A1C44	0180-0116	1	7	CAPACITOR-FXD 6.8UF+-10% 35VDC TA	56289	150D685X9035B2
A1A1C45	0150-0093	0		CAPACITOR-FXD .01UF +80-20% 100VDC CER	28480	0150-0093
A1A1C46				DELETED		
A1A1C47	0160-0342	3	1	CAPACITOR-FXD 800PF +-1% 300VDC MICA	28480	0160-0342
A1A1C48	0180-0137	6	1	CAPACITOR-FXD 100UF+-20% 10VDC TA	56289	150D107X0010R2
A1A1C49	0160-0127	2		CAPACITOR-FXD 1UF +-20% 25VDC CER	28480	0160-0127
A1A1CR1	1902-3086	3	1	DIODE-ZNR 4.75V 2% DO-7 PD=.4W TC=-.019%	28480	1902-3086
A1A1CR2	1901-0025	2	10	DIODE-GEN PRP 100V 200MA DO-7	28480	1901-0025
A1A1CR3	1910-0016	0	16	DIODE-GE 60V 60MA 1US DO-7	28480	1910-0016
A1A1CR4	1910-0016	0		DIODE-GE 60V 60MA 1US DO-7	28480	1910-0016
A1A1CR5	1910-0016	0		DIODE-GE 60V 60MA 1US DO-7	28480	1910-0016
A1A1CR6	1910-0016	0		DIODE-GE 60V 60MA 1US DO-7	28480	1910-0016
A1A1CR7	1902-3149	9	2	DIODE-ZNR 9.09V 5% DO-7 PD=.4W TC=+.057%	28480	1902-3149
A1A1CR8				DELETED		
A1A1CR9				DELETED		
A1A1CR10	1910-0016	0		DIODE-GE 60V 60MA 1US DO-7	28480	1910-0016
A1A1CR11	1910-0016	0		DIODE-GE 60V 60MA 1US DO-7	28480	1910-0016
A1A1CR12	1910-0016	0		DIODE-GE 60V 60MA 1US DO-7	28480	1910-0016
A1A1CR13	1910-0016	0		DIODE-GE 60V 60MA 1US DO-7	28480	1910-0016
A1A1CR14	1902-3193	3	1	DIODE-ZNR 13.3V 5% DO-7 PD=.4W TC=+.059%	28480	1902-3193
A1A1CR15	1910-0016	0		DIODE-GE 60V 60MA 1US DO-7	28480	1910-0016

See introduction to this section for ordering information
*Indicates factory selected value

Table 6-2. Replaceable Parts (Continued)

Reference Designation	HP Part Number	C D	Qty	Description	Mfr Code	Mfr Part Number
A1A1CR16	1910-0016	0		DIODE-GE 60V 60MA 1US DO-7	28480	1910-0016
A1A1CR17	1910-0016	0		DIODE-GE 60V 60MA 1US DO-7	28480	1910-0016
A1A1CR18	1910-0016	0		DIODE-GE 60V 60MA 1US DO-7	28480	1910-0016
A1A1CR19				DELETED		
A1A1CR20				DELETED		
A1A1CR21	1910-0016	0		DIODE-GE 60V 60MA 1US DO-7	28480	1910-0016
A1A1CR22	1910-0016	0		DIODE-GE 60V 60MA 1US DO-7	28480	1910-0016
A1A1CR23	1910-0016	0		DIODE-GE 60V 60MA 1US DO-7	28480	1910-0016
A1A1CR24	1910-0016	0		DIODE-GE 60V 60MA 1US DO-7	28480	1910-0016
A1A1CR25	1902-3203	6	3	DIODE-ZNR 14.7V 5% DO-7 PD=.4W TC=+.057%	28480	1902-3203
A1A1CR26	1901-0040	1	39	DIODE-SWITCHING 30V 50MA 2NS DO-35	28480	1901-0040
A1A1CR27	0122-0013	5	1	DIODE-VVC 39PF 5% DO-14 Q=?-MIN	28480	0122-0013
A1A1CR28				DELETED		
A1A1CR29	1902-3125	1	2	DIODE-ZNR 6.98V 2% DO-7 PD=.4W TC=+.045%	28480	1902-3125
A1A1CR30	1901-0040	1		DIODE-SWITCHING 30V 50MA 2NS DO-35	28480	1901-0040
A1A1CR31	1901-0040	1		DIODE-SWITCHING 30V 50MA 2NS DO-35	28480	1901-0040
A1A1CR32	1901-0050	3	2	DIODE-SWITCHING 80V 200MA 2NS DO-35	28480	1901-0050
A1A1CR33	1901-0050	3		DIODE-SWITCHING 80V 200MA 2NS DO-35	28480	1901-0050
A1A1CR34	1901-0040	1		DIODE-SWITCHING 30V 50MA 2NS DO-35	28480	1901-0040
A1A1CR35	1901-0040	1		DIODE-SWITCHING 30V 50MA 2NS DO-35	28480	1901-0040
A1A1CR36	1901-0040	1		DIODE-SWITCHING 30V 50MA 2NS DO-35	28480	1901-0040
A1A1CR37	1901-0040	1		DIODE-SWITCHING 30V 50MA 2NS DO-35	28480	1901-0040
A1A1CR38	1901-0040	1		DIODE-SWITCHING 30V 50MA 2NS DO-35	28480	1901-0040
A1A1CR39	1901-0040	1		DIODE-SWITCHING 30V 50MA 2NS DO-35	28480	1901-0040
A1A1CR40	1901-0040	1		DIODE-SWITCHING 30V 50MA 2NS DO-35	28480	1901-0040
A1A1CR41	1901-0040	1		DIODE-SWITCHING 30V 50MA 2NS DO-35	28480	1901-0040
A1A1IC1	1820-0322	0	4	IC CNTR TTL DECD NEG-EDGE-TRIG	18324	N8280N
A1A1IC2	1820-0322	0		IC CNTR TTL DECD NEG-EDGE-TRIG	18324	N8280N
A1A1IC3	1820-0070	5	1	IC GATE TTL NAND 8-INP	01295	SN7430N
A1A1IC4	1820-0315	1	1	IC MV DTL MONOSTBL	07263	951MC
A1A1IC5	1820-0322	0		IC CNTR TTL DECD NEG-EDGE-TRIG	18324	N8280N
A1A1IC6	1820-0322	0		IC CNTR TTL DECD NEG-EDGE-TRIG	18324	N8280N
A1A1L1	9100-1618	1	1	COIL-MLD 5.6UH 10% Q=45 .155DX.375LG-NOM	28480	9100-1618
A1A1L2	9140-0112	2	1	COIL-MLD 4.7UH 10% Q=33 .155DX.375LG-NOM	28480	9140-0112
A1A1L3	9140-0029	0	1	COIL-MLD 100UH 10% Q=30 .25DX.313LG-NOM	28480	9140-0029
A1A1L4	9140-0114	4	1	COIL-MLD 10UH 10% Q=55 .155DX.375LG-NOM	28480	9140-0114
A1A1L6	9140-0137	1	4	COIL-MLD 1MH 5% Q=60 .19DX.44LG-NOM	28480	9140-0137
A1A1L7	9140-0096	1	1	COIL-MLD 1UH 10% Q=50 .155DX.375LG-NOM	28480	9140-0096
A1A1L8	9140-0137	1		COIL-MLD 1MH 5% Q=60 .19DX.44LG-NOM	28480	9140-0137
A1A1L9	9100-1669	2	1	COIL-MLD 4.7MH 5% Q=80 .24DX.74LG-NOM	28480	9100-1669
A1A1Q1	1854-0072	8	1	TRANSISTOR NPN 2N3054 SI TO-66 PD=25W	01928	2N3054
A1A1Q2	1854-0009	1	3	TRANSISTOR NPN SI PD=300MW FT=600MHZ	04713	2N709
A1A1Q3	1854-0009	1		TRANSISTOR NPN SI PD=300MW FT=600MHZ	04713	2N709
A1A1Q4	1854-0009	1		TRANSISTOR NPN SI PD=300MW FT=600MHZ	04713	2N709
A1A1Q5-A1A1Q16			2	DELETED		
A1A1Q17	1854-0013	7	2	TRANSISTOR NPN 2N2218A SI TO-5 PD=800MW	04713	2N2218A
A1A1Q18	1854-0092	2	7	TRANSISTOR NPN SI PD=200MW FT=600MHZ	28480	1854-0092
A1A1Q19	1854-0013	7		TRANSISTOR NPN 2N2218A SI TO-5 PD=800MW	04713	2N2218A
A1A1Q20	1854-0547	2	1	TRANSISTOR NPN 2N3725 SI TO-5 PD=800MW	01295	2N3725
A1A1Q21	1854-0092	2		TRANSISTOR NPN SI PD=200MW FT=600MHZ	28480	1854-0092
A1A1Q22	1854-0092	2		TRANSISTOR NPN SI PD=200MW FT=600MHZ	28480	1854-0092
A1A1Q23	1854-0023	9	24	TRANSISTOR NPN SI TO-18 PD=360MW	28480	1854-0023
A1A1Q24	1854-0003	5	22	TRANSISTOR NPN SI TO-39 PD=800MW	28480	1854-0003
A1A1Q25	1854-0003	5		TRANSISTOR NPN SI TO-39 PD=800MW	28480	1854-0003
A1A1Q26	1854-0092	2		TRANSISTOR NPN SI PD=200MW FT=600MHZ	28480	1854-0092
A1A1Q27	1854-0023	9		TRANSISTOR NPN SI TO-18 PD=360MW	28480	1854-0023
A1A1R1	0757-0818	3	1	RESISTOR 825 1% .5W F TC=0+-100	28480	0757-0818
A1A1R2	0757-0900	4	10	RESISTOR 100 2% .125W F TC=0+-100	24546	C4-1/8-T0-101-G
A1A1R3	0698-3311	1	1	RESISTOR 51 5% 2W MO TC=0+-200	28480	0698-3311
A1A1R4	0757-0924	2	32	RESISTOR 1K 2% .125W F TC=0+-100	24546	C4-1/8-T0-1001-G
A1A1R5	0757-0924	2		RESISTOR 1K 2% .125W F TC=0+-100	24546	C4-1/8-T0-1001-G
A1A1R6	0757-0948	0	46	RESISTOR 10K 2% .125W F TC=0+-100	24546	C4-1/8-T0-1002-G
A1A1R7	0757-0948	0		RESISTOR 10K 2% .125W F TC=0+-100	24546	C4-1/8-T0-1002-G
A1A1R8	0757-0948	0		RESISTOR 10K 2% .125W F TC=0+-100	24546	C4-1/8-T0-1002-G
A1A1R9	0757-0948	0		RESISTOR 10K 2% .125W F TC=0+-100	24546	C4-1/8-T0-1002-G
A1A1R10	0757-0948	0		RESISTOR 10K 2% .125W F TC=0+-100	24546	C4-1/8-T0-1002-G
A1A1R11	0757-0948	0		RESISTOR 10K 2% .125W F TC=0+-100	24546	C4-1/8-T0-1002-G
A1A1R12	0757-0948	0		RESISTOR 10K 2% .125W F TC=0+-100	24546	C4-1/8-T0-1002-G
A1A1R13	0757-0948	0		RESISTOR 10K 2% .125W F TC=0+-100	24546	C4-1/8-T0-1002-G
A1A1R14	0757-0948	0		RESISTOR 10K 2% .125W F TC=0+-100	24546	C4-1/8-T0-1002-G
A1A1R15	0757-0948	0		RESISTOR 10K 2% .125W F TC=0+-100	24546	C4-1/8-T0-1002-G

See introduction to this section for ordering information
*Indicates factory selected value

Table 6-2. Replaceable Parts (Continued)

Reference Designation	HP Part Number	C D	Qty	Description	Mfr Code	Mfr Part Number
A1A1R16	0757-0948	0		RESISTOR 10K 2% .125W F TC=0+-100	24546	C4-1/8-T0-1002-G
A1A1R17	0757-0948	0		RESISTOR 10K 2% .125W F TC=0+-100	24546	C4-1/8-T0-1002-G
A1A1R18	0757-0917	3	9	RESISTOR 510 2% .125W F TC=0+-100	24546	C4-1/8-T0-511-G
A1A1R19	0757-0948	0		RESISTOR 10K 2% .125W F TC=0+-100	24546	C4-1/8-T0-1002-G
A1A1R20	0757-0924	2		RESISTOR 1K 2% .125W F TC=0+-100	24546	C4-1/8-T0-1001-G
A1A1R21	0757-0940	2	5	RESISTOR 4.7K 2% .125W F TC=0+-100	24546	C4-1/8-T0-4701-G
A1A1R22	0757-0924	2		RESISTOR 1K 2% .125W F TC=0+-100	24546	C4-1/8-T0-1001-G
A1A1R23	0757-0948	0		RESISTOR 10K 2% .125W F TC=0+-100	24546	C4-1/8-T0-1002-G
A1A1R24	0757-0948	0		RESISTOR 10K 2% .125W F TC=0+-100	24546	C4-1/8-T0-1002-G
A1A1R25	0757-0948	0		RESISTOR 10K 2% .125W F TC=0+-100	24546	C4-1/8-T0-1002-G
A1A1R26	0757-0948	0		RESISTOR 10K 2% .125W F TC=0+-100	24546	C4-1/8-T0-1002-G
A1A1R27-						
A1A1R53				DELETED		
A1A1R54	0757-0967	3	1	RESISTOR 62K 2% .125W F TC=0+-100	24546	C4-1/8-T0-6202-G
A1A1R55	0757-0962	8	3	RESISTOR 39K 2% .125W F TC=0+-100	24546	C4-1/8-T0-3902-G
A1A1R56	0757-0948	0		RESISTOR 10K 2% .125W F TC=0+-100	24546	C4-1/8-T0-1002-G
A1A1R57	0757-0893	4		RESISTOR 51 2% .125W F TC=0+-100	24546	C4-1/8-T0-51R0-G
A1A1R58				DELETED		
A1A1R59	0757-0948	0		RESISTOR 10K 2% .125W F TC=0+-100	24546	C4-1/8-T0-1002-G
A1A1R60	0757-0933	3	2	RESISTOR 2.4K 2% .125W F TC=0+-100	24546	C4-1/8-T0-2401-G
A1A1R61	0757-0907	1	5	RESISTOR 200 2% .125W F TC=0+-100	24546	C4-1/8-T0-201-G
A1A1R62	0721-0011	3	2	RESISTOR 500K 1% .125W CF TC=0-500	91637	DC1/8-501-F
A1A1R63	0757-0910	6	1	RESISTOR 270 2% .125W F TC=0+-100	24546	C4-1/8-T0-271-G
A1A1R64	0757-0931	1	8	RESISTOR 2K 2% .125W F TC=0+-100	24546	C4-1/8-T0-2001-G
A1A1R65	0757-0969	5	1	RESISTOR 75K 2% .125W F TC=0+-100	24546	C4-1/8-T0-7502-G
A1A1R66	0757-0957	1	15	RESISTOR 24K 2% .125W F TC=0+-100	24546	C4-1/8-T0-2402-G
A1A1R67	0757-0893	4		RESISTOR 51 2% .125W F TC=0+-100	24546	C4-1/8-T0-51R0-G
A1A1R68	0757-0893	4		RESISTOR 51 2% .125W F TC=0+-100	24546	C4-1/8-T0-51R0-G
A1A1R69	0757-0929	7	7	RESISTOR 1.6K 2% .125W F TC=0+-100	24546	C4-1/8-T0-1601-G
A1A1R70	0757-0936	6	4	RESISTOR 3.3K 2% .125W F TC=0+-100	24546	C4-1/8-T0-3301-G
A1A1R71*						
A1A1R72	0757-0972	0	8	RESISTOR 100K 2% .125W F TC=0+-100	24546	C4-1/8-T0-1002-G
A1A1R73	0698-3130	2	3	RESISTOR 2.7M 1% .125W CF TC=0-800	91637	DC-1/8-2704-F
A1A1R74	0698-3130	2		RESISTOR 2.7M 1% .125W CF TC=0-800	91637	DC-1/8-2704-F
A1A1R75	0757-0924	2		RESISTOR 1K 2% .125W F TC=0+-100	24546	C4-1/8-T0-1001-G
A1A1R76	0757-0929	7		RESISTOR 1.6K 2% .125W F TC=0+-100	24546	C4-1/8-T0-1601-G
A1A1R77	0757-0902	6	1	RESISTOR 120 2% .125W F TC=0+-100	24546	C4-1/8-T0-121-G
A1A1R78	0757-0935	5	6	RESISTOR 3K 2% .125W F TC=0+-100	24546	C4-1/8-T0-3001-G
A1A1R79	0698-3129	9	3	RESISTOR 1M 1% .125W CF TC=0-500	91637	DC-1/8-1004-F
A1A1R80	0721-0011	3		RESISTOR 500K 1% .125W CF TC=0-500	91637	DC1/8-501-F
A1A1R81	0757-0960	6	4	RESISTOR 33K 2% .125W F TC=0+-100	24546	C4-1/8-T0-3302-G
A1A1R82	0698-3126	6	1	RESISTOR 2.21M 1% .125W CF TC=0-800	91637	DC-1/8-2214-F
A1A1R83	0698-3127	7	2	RESISTOR 4.75M 2% .125W CF TC=0-1300	91637	DC-1/8-4754-G
A1A1R84	0757-0948	0		RESISTOR 10K 2% .125W F TC=0+-100	24546	C4-1/8-T0-1002-G
A1A1R85*	0757-0944	6	3	RESISTOR 6.8K 2% .125W F TC=0+-100	24546	C4-1/8-T0-6801-G
A1A1R86	0698-3130	2		RESISTOR 2.7M 1% .125W CF TC=0-800	91637	DC-1/8-2704-F
A1A1R87	0757-0943	5	1	RESISTOR 6.2K 2% .125W F TC=0+-100	24546	C4-1/8-T0-6201-G
A1A1R88	0757-0924	2		RESISTOR 1K 2% .125W F TC=0+-100	24546	C4-1/8-T0-1001-G
A1A1R89	0757-0924	2		RESISTOR 1K 2% .125W F TC=0+-100	24546	C4-1/8-T0-1001-G
A1A1R90	0757-0942	4	3	RESISTOR 5.6K 2% .125W F TC=0+-100	24546	C4-1/8-T0-5601-G
A1A1R91	0757-0929	7		RESISTOR 1.6K 2% .125W F TC=0+-100	24546	C4-1/8-T0-1601-G
A1A1R92	0757-0893	4		RESISTOR 51 2% .125W F TC=0+-100	24546	C4-1/8-T0-51R0-G
A1A1R93	0757-0934	4	1	RESISTOR 2.7K 2% .125W F TC=0+-100	24546	C4-1/8-T0-2701-G
A1A1R94	0757-0962	8		RESISTOR 39K 2% .125W F TC=0+-100	24546	C4-1/8-T0-3902-G
A1A1R95	0757-0900	4		RESISTOR 100 2% .125W F TC=0+-100	24546	C4-1/8-T0-101-G
A1A1R96-						
A1A1R99				DELETED		
A1A1R100	0757-0917	3		RESISTOR 510 2% .125W F TC=0+-100	24546	C4-1/8-T0-511-G
A1A1T1	05065-8012	0	1	TRANSFORMER, BLOCKING OSCILLATOR	28480	05065-8012
A1A1T2	05065-8011	8	2	TRANSFORMER, 5.3 MHZ	28480	05065-8011
A1A1T3	05065-8011	8		TRANSFORMER, 5.3 MHZ	28480	05065-8011
A1A1XY1	1200-0159	7	1	SOCKET-XTAL 2-CONT HC-6/U DIP-SLDR	28480	1200-0159
	0340-0037	5	2	TERMINAL-STUD DBL-TUR PRESS-MTG	28480	0340-0037
	0340-0039	7	2	TERMINAL BUSHING - TEFLON: MOUNTS IN	28480	0340-0039
	0340-0162	7	1	INSULATOR-XSTR ALUMINUM	28480	0340-0162
A2				OPT 002 OR 003 FOR CALLOUTS SEE TABLE 6-3.		
A3	05065-6078	6	1	MODULE ASSEMBLY, MULTIPLIER	28480	05065-6078
A3C1	0160-3036	8	5	CAPACITOR-FDTHRU 5000PF +80 -20% 200V	28480	0160-3036
A3C2	0160-3036	8		CAPACITOR-FDTHRU 5000PF +80 -20% 200V	28480	0160-3036
A3C3	0160-3036	8		CAPACITOR-FDTHRU 5000PF +80 -20% 200V	28480	0160-3036

See introduction to this section for ordering information
*Indicates factory selected value

Table 6-2. Replaceable Parts (Continued)

Reference Designation	HP Part Number	C D	Qty	Description	Mfr Code	Mfr Part Number
A3J1	1250-0258	2	5	CONNECTOR-RF SMB M SGL-HOLE-FR 50-OHM	28480	1250-0258
A3J2	1250-0258	2		CONNECTOR-RF SMB M SGL-HOLE-FR 50-OHM	28480	1250-0258
A3J3	1250-0258	2		CONNECTOR-RF SMB M SGL-HOLE-FR 50-OHM	28480	1250-0258
A3J4	1250-0829	3	3	CONNECTOR-RF SMC M SGL-HOLE-FR 50-OHM	28480	1250-0829
A3J5	1250-0258	2		CONNECTOR-RF SMB M SGL-HOLE-FR 50-OHM	28480	1250-0258
A3J6	1250-0258	2		CONNECTOR-RF SMB M SGL-HOLE-FR 50-OHM	28480	1250-0258
A3J7	1250-0829	3		CONNECTOR-RF SMC M SGL-HOLE-FR 50-OHM	28480	1250-0829
A3J8	1250-0829	3		CONNECTOR-RF SMC M SGL-HOLE-FR 50-OHM	28480	1250-0829
	0403-0114	3	1	GUIDE-PC BD BE-CU .094-BD-THKNS 3-LG	28480	0403-0114
	05065-0045	1	1	COVER, MULTIPLIER	28480	05065-0045
	05065-2052	8	1	RIB, MULTIPLIER MODULE	28480	05065-2052
	05065-2054	2	1	SPACER, PLASTIC	28480	05065-2054
	05065-2055	4	1	PLATE, END	28480	05065-2055
	05065-2056	6	1	PLATE, BOTTOM	28480	05065-2056
A3A1	05065-6009	1	1	BOARD ASSY, MULTIPLIER(NOT FOR REPLACE-MENT, FOR REPLACEMENT ORDER 05065-6078	28480	05065-6009
A3A1C1	0121-0046	2	11	CAPACITOR-V TRMR-CER 9-35PF 200V PC-MTG	52763	304322 9/35PF N650
A3A1C2	0160-2055	9	11	CAPACITOR-FXD .01UF +80-20% 100VDC CER	28480	0160-2055
A3A1C3	0140-0147	4	1	CAPACITOR-FXD 180PF +-5% 500VDC MICA	72136	DM15F181J0500WV1CR
A3A1C4	0160-2055	9		CAPACITOR-FXD .01UF +80-20% 100VDC CER	28480	0160-2055
A3A1C5	0170-0094	3	5	CAPACITOR-FXD .047UF +-20% 50VDC POLYE	84411	602-4730R5W2
A3A1C6	0160-2055	9		CAPACITOR-FXD .01UF +80-20% 100VDC CER	28480	0160-2055
A3A1C7	0160-2055	9		CAPACITOR-FXD .01UF +80-20% 100VDC CER	28480	0160-2055
A3A1C8	0160-2020	8	10	CAPACITOR-FXD 910PF +-5% 100VDC MICA	28480	0160-2020
A3A1C9	0170-0094	3		CAPACITOR-FXD .047UF +-20% 50VDC POLYE	84411	602-4730R5W2
A3A1C10	0160-2055	9		CAPACITOR-FXD .01UF +80-20% 100VDC CER	28480	0160-2055
A3A1C11	0160-2535	0	1	CAPACITOR-FXD 320PF +-1% 300VDC MICA	28480	0160-2535
A3A1C12	0180-0116	1		CAPACITOR-FXD 6.8UF+-10% 35VDC TA	56289	150D685X9035B2
A3A1C13	0160-2020	8		CAPACITOR-FXD 910PF +-5% 100VDC MICA	28480	0160-2020
A3A1C14	0170-0094	3		CAPACITOR-FXD .047UF +-20% 50VDC POLYE	84411	602-4730R5W2
A3A1C15	0160-2055	9		CAPACITOR-FXD .01UF +80-20% 100VDC CER	28480	0160-2055
A3A1C16	0160-2020	8		CAPACITOR-FXD 910PF +-5% 100VDC MICA	28480	0160-2020
A3A1C17	0170-0082	9	5	CAPACITOR-FXD .01UF +-20% 50VDC POLYE	84411	601PE1030R5W1
A3A1C18	0121-0046	2		CAPACITOR-V TRMR-CER 9-35PF 200V PC-MTG	52763	304322 9/35PF N650
A3A1C19	0121-0046	2		CAPACITOR-V TRMR-CER 9-35PF 200V PC-MTG	52763	304322 9/35PF N650
A3A1C20	0160-2013	9	1	CAPACITOR-FXD 39PF +-5% 300VDC MICA	28480	0160-2013
A3A1C21	0160-2055	9		CAPACITOR-FXD .01UF +80-20% 100VDC CER	28480	0160-2055
A3A1C22	0170-0083	0	2	CAPACITOR-FXD .022UF +-20% 50VDC POLYE	84411	601PE2230R5W1
A3A1C23	0160-2020	8		CAPACITOR-FXD 910PF +-5% 100VDC MICA	28480	0160-2020
A3A1C24	0160-2055	9		CAPACITOR-FXD .01UF +80-20% 100VDC CER	28480	0160-2055
A3A1C25	0170-0094	3		CAPACITOR-FXD .047UF +-20% 50VDC POLYE	84411	602-4730R5W2
A3A1C26	0160-2025	3	1	CAPACITOR-FXD 220PF +-5% 500VDC MICA	28480	0160-2025
A3A1C27	0160-0950	9	1	CAPACITOR-FXD 60PF +-5% 300VDC MICA	28480	0160-0950
A3A1C28	0170-0082	9		CAPACITOR-FXD .01UF +-20% 50VDC POLYE	84411	601PE1030R5W1
A3A1C29	0170-0082	9		CAPACITOR-FXD .01UF +-20% 50VDC POLYE	84411	601PE1030R5W1
A3A1C30	0121-0046	2		CAPACITOR-V TRMR-CER 9-35PF 200V PC-MTG	52763	304322 9/35PF N650
A3A1C31	0170-0082	9		CAPACITOR-FXD .01UF +-20% 50VDC POLYE	84411	601PE1030R5W1
A3A1C32	0160-2020	8		CAPACITOR-FXD 910PF +-5% 100VDC MICA	28480	0160-2020
A3A1C33	0121-0046	2		CAPACITOR-V TRMR-CER 9-35PF 200V PC-MTG	52763	304322 9/35PF N650
A3A1C34	0160-2055	9		CAPACITOR-FXD .01UF +80-20% 100VDC CER	28480	0160-2055
A3A1C35	0150-0050	9	4	CAPACITOR-FXD 1000PF +80-20% 1KVDC CER	28480	0150-0050
A3A1C36	0160-2055	9		CAPACITOR-FXD .01UF +80-20% 100VDC CER	28480	0160-2055
A3A1C37	0180-0113	8	10	CAPACITOR-FXD 100UF+20-15% 30VDC TA	06001	69F355G7
A3A1C38	0170-0083	0		CAPACITOR-FXD .022UF +-20% 50VDC POLYE	84411	601PE2230R5W1
A3A1C39	0160-2020	8		CAPACITOR-FXD 910PF +-5% 100VDC MICA	28480	0160-2020
A3A1C40	0150-0050	9		CAPACITOR-FXD 1000PF +80-20% 1KVDC CER	28480	0150-0050
A3A1C41	0170-0082	9		CAPACITOR-FXD .01UF +-20% 50VDC POLYE	84411	601PE1030R5W1
A3A1C42	0150-0050	9		CAPACITOR-FXD 1000PF +80-20% 1KVDC CER	28480	0150-0050
A3A1C43	0150-0050	9		CAPACITOR-FXD 1000PF +80-20% 1KVDC CER	28480	0150-0050
A3A1C44	0160-0974	7	2	CAPACITOR-FXD 80PF +-2% 300VDC MICA	28480	0160-0974
A3A1C45	0160-2020	8		CAPACITOR-FXD 910PF +-5% 100VDC MICA	28480	0160-2020
A3A1C46	0121-0046	2		CAPACITOR-V TRMR-CER 9-35PF 200V PC-MTG	52763	304322 9/35PF N650
A3A1C47	0160-2020	8		CAPACITOR-FXD 910PF +-5% 100VDC MICA	28480	0160-2020
A3A1C48	0160-2055	9		CAPACITOR-FXD .01UF +80-20% 100VDC CER	28480	0160-2055
A3A1C49	0121-0046	2		CAPACITOR-V TRMR-CER 9-35PF 200V PC-MTG	52763	304322 9/35PF N650
A3A1C50	0160-2251	7	1	CAPACITOR-FXD 5.6PF +-.25PF 500VDC CER	28480	0160-2251
A3A1C51	0160-0179	4	1	CAPACITOR-FXD 33PF +-5% 300VDC MICA	28480	0160-0179
A3A1C52	0121-0046	2		CAPACITOR-V TRMR-CER 9-35PF 200V PC-MTG	52763	304322 9/35PF N650
A3A1C53	0160-2020	8		CAPACITOR-FXD 910PF +-5% 100VDC MICA	28480	0160-2020
A3A1C54	0160-2020	8		CAPACITOR-FXD 910PF +-5% 100VDC MICA	28480	0160-2020
A3A1C55	0160-2218	6	2	CAPACITOR-FXD 1000PF +-5% 300VDC MICA	28480	0160-2218
A3A1C56	0160-0949	6	1	CAPACITOR-FXD 68PF +-5% 300VDC MICA	28480	0160-0949
A3A1C57	0160-0974	7		CAPACITOR-FXD 80PF +-2% 300VDC MICA	28480	0160-0974
A3A1C58	0160-0182	9	1	CAPACITOR-FXD 47PF +-5% 300VDC MICA	28480	0160-0182
A3A1C59	0121-0046	2		CAPACITOR-V TRMR-CER 9-35PF 200V PC-MTG	52763	304322 9/35PF N650
A3A1C60	0160-2218	6		CAPACITOR-FXD 1000PF +-5% 300VDC MICA	28480	0160-2218

See introduction to this section for ordering information
*Indicates factory selected value

Table 6-2. Replaceable Parts (Continued)

Reference Designation	HP Part Number	C D	Qty	Description	Mfr Code	Mfr Part Number
A3A1C61	0121-0046	2		CAPACITOR-V TRMR-CER 9-35PF 200V PC-MTG	52763	304322 9/35PF N650
A3A1CR1	1901-0535	9	8	DIODE-SCHOTTKY	28480	1901-0535
A3A1CR2	1901-0535	9		DIODE-SCHOTTKY	28480	1901-0535
A3A1CR3	0122-0221	7	4	DIODE-VVC 100PF 10% C4/C25-MIN=2 BVR=30V	28480	0122-0221
A3A1CR4	0122-0221	7		DIODE-VVC 100PF 10% C4/C25-MIN=2 BVR=30V	28480	0122-0221
A3A1CR5	0122-0221	7		DIODE-VVC 100PF 10% C4/C25-MIN=2 BVR=30V	28480	0122-0221
A3A1CR6	0122-0221	7		DIODE-VVC 100PF 10% C4/C25-MIN=2 BVR=30V	28480	0122-0221
A3A1CR7	1901-0535	9		DIODE-SCHOTTKY	28480	1901-0535
A3A1CR8	1901-0535	9		DIODE-SCHOTTKY	28480	1901-0535
A3A1CR9	1901-0179	7	2	DIODE-SWITCHING 15V 50MA 750PS DO-7	28480	1901-0179
A3A1CR10	1901-0179	7		DIODE-SWITCHING 15V 50MA 750PS DO-7	28480	1901-0179
A3A1CR11	1901-0535	9		DIODE-SCHOTTKY	28480	1901-0535
A3A1CR12	1901-0535	9		DIODE-SCHOTTKY	28480	1901-0535
A3A1CR13	1901-0535	9		DIODE-SCHOTTKY	28480	1901-0535
A3A1CR14	1901-0535	9		DIODE-SCHOTTKY	28480	1901-0535
A3A1L1	9100-2284	9	5	COIL-MLD 470UH 10% Q=30 .095DX.25LG-NOM	28480	9100-2284
A3A1L2	9140-0145	1	6	COIL-MLD 8.2UH 10% Q=60 .095DX.25LG-NOM	28480	9140-0145
A3A1L3	9100-2284	9		COIL-MLD 470UH 10% Q=30 .095DX.25LG-NOM	28480	9100-2284
A3A1L4	9100-2284	9		COIL-MLD 470UH 10% Q=30 .095DX.25LG-NOM	28480	9100-2284
A3A1L5	9140-0145	1		COIL-MLD 8.2UH 10% Q=60 .095DX.25LG-NOM	28480	9140-0145
A3A1L6	05065-8018	2	1	COIL, FILTER AMPLIFIER	28480	05065-8018
A3A1L7	9100-2284	9		COIL-MLD 470UH 10% Q=30 .095DX.25LG-NOM	28480	9100-2284
A3A1L8	9140-0145	1		COIL-MLD 8.2UH 10% Q=60 .095DX.25LG-NOM	28480	9140-0145
A3A1L9	9140-0145	1		COIL-MLD 8.2UH 10% Q=60 .095DX.25LG-NOM	28480	9140-0145
A3A1L10	9100-2284	9		COIL-MLD 470UH 10% Q=30 .095DX.25LG-NOM	28480	9100-2284
A3A1L11	9140-0145	1		COIL-MLD 8.2UH 10% Q=60 .095DX.25LG-NOM	28480	9140-0145
A3A1L12	9100-2279	2	2	COIL-MLD 180UH 10% Q=30 .095DX.25LG-NOM	28480	9100-2279
A3A1L13	9100-1619	2	3	COIL-MLD 6.8UH 10% Q=50 .155DX.375LG-NOM	28480	9100-1619
A3A1L14	9100-1661	4	1	COIL-MLD 2.2MH 5% Q=70 .215DX.56LG-NOM	28480	9100-1661
A3A1L15	05065-8020	7	1	TRANSFORMER, 60 MHZ DRIVE	28480	05065-8020
A3A1L16	9100-2279	2		COIL-MLD 180UH 10% Q=30 .095DX.25LG-NOM	28480	9100-2279
A3A1L17	9100-1619	2		COIL-MLD 6.8UH 10% Q=50 .155DX.375LG-NOM	28480	9100-1619
A3A1L18	9100-2272	5	2	COIL-MLD 47UH 10% Q=45 .095DX.25LG-NOM	28480	9100-2272
A3A1L19	9100-1619	2		COIL-MLD 6.8UH 10% Q=50 .155DX.375LG-NOM	28480	9100-1619
A3A1L20	05065-8016	8	1	COIL, 20 MHZ	28480	05065-8016
A3A1L21	05065-8019	4	1	TRANSFORMER, POWER AMPLIFIER	28480	05065-8019
A3A1L22	9140-0145	1		COIL-MLD 8.2UH 10% Q=60 .095DX.25LG-NOM	28480	9140-0145
A3A1L23	9100-2272	5		COIL-MLD 47UH 10% Q=45 .095DX.25LG-NOM	28480	9100-2272
A3A1L24	05065-8017	0	1	COIL, 60 MHZ	28480	05065-8017
A3A1L25	05065-8013	2	1	COIL, MATCHING HARMONIC GENERATOR	28480	05065-8013
A3A1Q1	1854-0005	7	16	TRANSISTOR NPN 2N708 SI TO-18 PD=360MW	04713	2N708
A3A1Q2	1855-0327	8	4	TRANSISTOR J-FET 2N4416 N-CHAN D-MODE	01295	2N4416
A3A1Q3	1855-0306	3	1	TRANSISTOR MOSFET 3N128 N-CHAN D-MODE	01928	3N128
A3A1Q4	1854-0023	9		TRANSISTOR NPN SI TO-18 PD=360MW	28480	1854-0023
A3A1Q5	1855-0327	8		TRANSISTOR J-FET 2N4416 N-CHAN D-MODE	01295	2N4416
A3A1Q6	1855-0327	8		TRANSISTOR J-FET 2N4416 N-CHAN D-MODE	01295	2N4416
A3A1Q7	1853-0203	5	1	TRANSISTOR PNP SI PD=360MW FT=700MHZ	28480	1853-0203
A3A1Q8	1855-0327	8		TRANSISTOR J-FET 2N4416 N-CHAN D-MODE	01295	2N4416
A3A1Q9	1854-0233	3	1	TRANSISTOR NPN 2N3866 SI TO-39 PD=1W	01928	2N3866
A3A1R1	0757-0924	2		RESISTOR 1K 2% .125W F TC=0+-100	24546	C4-1/8-T0-1001-G
A3A1R2	0757-0909	3	2	RESISTOR 240 2% .125W F TC=0+-100	24546	C4-1/8-T0-241-G
A3A1R3	2100-1756	1	1	RESISTOR-TRMR 200 5% WW SIDE-ADJ 1-TRN	28480	2100-1756
A3A1R4	0757-0920	8	2	RESISTOR 680 2% .125W F TC=0+-100	24546	C4-1/8-T0-681-G
A3A1R5	0757-0928	6	6	RESISTOR 1.5K 2% .125W F TC=0+-100	24546	C4-1/8-T0-1501-G
A3A1R6	0757-0928	6		RESISTOR 1.5K 2% .125W F TC=0+-100	24546	C4-1/8-T0-1501-G
A3A1R7	0757-0974	2	1	RESISTOR 120K 2% .125W F TC=0+-100	24546	C4-1/8-T0-1202-G
A3A1R8	0757-0897	8		RESISTOR 75 2% .125W F TC=0+-100	24546	C4-1/8-T0-75R0-G
A3A1R9	0757-0901	5	1	RESISTOR 110 2% .125W F TC=0+-100	24546	C4-1/8-T0-111-G
A3A1R10	0757-0893	4		RESISTOR 51 2% .125W F TC=0+-100	24546	C4-1/8-T0-51R0-G
A3A1R11	2100-1762	9	1	RESISTOR-TRMR 20K 5% WW SIDE-ADJ 1-TRN	28480	2100-1762
A3A1R12	0757-0925	3	3	RESISTOR 1.1K 2% .125W F TC=0+-100	24546	C4-1/8-T0-1101-G
A3A1R13	0757-0959	3	10	RESISTOR 30K 2% .125W F TC=0+-100	24546	C4-1/8-T0-3002-G
A3A1R14	0757-0948	0		RESISTOR 10K 2% .125W F TC=0+-100	24546	C4-1/8-T0-1002-G
A3A1R15	0757-0948	0		RESISTOR 10K 2% .125W F TC=0+-100	24546	C4-1/8-T0-1002-G
A3A1R16	0757-0959	3		RESISTOR 30K 2% .125W F TC=0+-100	24546	C4-1/8-T0-3002-G
A3A1R17	0757-0924	2		RESISTOR 1K 2% .125W F TC=0+-100	24546	C4-1/8-T0-1001-G
A3A1R18	0757-0924	2		RESISTOR 1K 2% .125W F TC=0+-100	24546	C4-1/8-T0-1001-G
A3A1R19	0757-0959	3		RESISTOR 30K 2% .125W F TC=0+-100	24546	C4-1/8-T0-3002-G
A3A1R20	0757-0959	3		RESISTOR 30K 2% .125W F TC=0+-100	24546	C4-1/8-T0-3002-G
A3A1R21	0757-0925	3		RESISTOR 1.1K 2% .125W F TC=0+-100	24546	C4-1/8-T0-1101-G
A3A1R22	0757-0931	1		RESISTOR 2K 2% .125W F TC=0+-100	24546	C4-1/8-T0-2001-G
A3A1R23	0757-0924	2		RESISTOR 1K 2% .125W F TC=0+-100	24546	C4-1/8-T0-1001-G
A3A1R24	0757-0948	0		RESISTOR 10K 2% .125W F TC=0+-100	24546	C4-1/8-T0-1002-G
A3A1R25	0757-0959	3		RESISTOR 30K 2% .125W F TC=0+-100	24546	C4-1/8-T0-3002-G

See introduction to this section for ordering information
*Indicates factory selected value

Table 6-2. Replaceable Parts (Continued)

Reference Designation	HP Part Number	C D	Qty	Description	Mfr Code	Mfr Part Number
A3A1R26	0757-0924	2		RESISTOR 1K 2% .125W F TC=0+-100	24546	C4-1/8-T0-1001-G
A3A1R27	0757-0924	2		RESISTOR 1K 2% .125W F TC=0+-100	24546	C4-1/8-T0-1001-G
A3A1R28	0757-0955	9	20	RESISTOR 20K 2% .125W F TC=0+-100	24546	C4-1/8-T0-2002-G
A3A1R29	0757-0925	3		RESISTOR 1.1K 2% .125W F TC=0+-100	24546	C4-1/8-T0-1101-G
A3A1R30	0757-0948	0		RESISTOR 10K 2% .125W F TC=0+-100	24546	C4-1/8-T0-1002-G
A3A1R31	0757-0959	3		RESISTOR 30K 2% .125W F TC=0+-100	24546	C4-1/8-T0-3002-G
A3A1R32	0757-0964	0	3	RESISTOR 47K 2% .125W F TC=0+-100	24546	C4-1/8-T0-4702-G
A3A1R33	0757-0931	1		RESISTOR 2K 2% .125W F TC=0+-100	24546	C4-1/8-T0-2001-G
A3A1R34	0757-0951	5	2	RESISTOR 13K 2% .125W F TC=0+-100	24546	C4-1/8-T0-1302-G
A3A1R35	0757-0954	8	3	RESISTOR 18K 2% .125W F TC=0+-100	24546	C4-1/8-T0-1802-G
A3A1R36	0757-0924	2		RESISTOR 1K 2% .125W F TC=0+-100	24546	C4-1/8-T0-1001-G
A3A1R37	0698-3432	7	1	RESISTOR 26.1 1% .125W F TC=0+-100	03888	PME55-1/8-T0-26R1-F
A3A1R38	0698-3443	0	2	RESISTOR 287 1% .125W F TC=0+-100	24546	C4-1/8-T0-287R-F
A3A1R39	0757-0294	9	1	RESISTOR 17.8 1% .125W F TC=0+-100	19701	MF4C1/8-T0-17R8-F
A3A1R40	2100-1777	6	2	RESISTOR-TRMR 20K 5% HW TOP-ADJ 1-TRN	28480	2100-1777
A3A1R41	0698-3443	0		RESISTOR 287 1% .125W F TC=0+-100	24546	C4-1/8-T0-287R-F
A3A1T1	00105-8003	0	1	TRANSFORMER, POWER AMP	28480	00105-8003
A3A1T2	05065-8014	4	1	TRANSFORMER, 5-10 MHZ	28480	05065-8014
A3A1T3	05065-8015	6	1	TRANSFORMER, 10-20 MHZ	28480	05065-8015
	1205-0033	6	1	HEAT SINK TO-5/TO-39-CB	28480	1205-0033
A4	05065-6070	0	1	BOARD ASSEMBLY, 100 KHZ DIVIDER	28480	05065-6070
A4C1	0180-0113	8		CAPACITOR-FXD 100UF+20-15% 30VDC TA	06001	69F355G7
A4C2	0150-0121	5		CAPACITOR-FXD .1UF +80-20% 50VDC CER	28480	0150-0121
A4C3	0160-2566	7	1	CAPACITOR-FXD 2000PF +-2% 300VDC MICA	28480	0160-2566
A4C4	0150-0121	5		CAPACITOR-FXD .1UF +80-20% 50VDC CER	28480	0150-0121
A4C5	0150-0121	5		CAPACITOR-FXD .1UF +80-20% 50VDC CER	28480	0150-0121
A4C6	0180-0291	3		CAPACITOR-FXD 1UF+-10% 35VDC TA	56289	150D105X9035A2
A4C7	0160-0194	3	1	CAPACITOR-FXD .015UF +-10% 200VDC POLYE	28480	0160-0194
A4C8	0180-0291	3		CAPACITOR-FXD 1UF+-10% 35VDC TA	56289	150D105X9035A2
A4C9	0160-0340	1	1	CAPACITOR-FXD 600PF +-1% 300VDC MICA	28480	0160-0340
A4C10	0160-3064	2	1	CAPACITOR-FXD 1000PF +-5% 300VDC MICA	28480	0160-3064
A4C11	0180-0291	3		CAPACITOR-FXD 1UF+-10% 35VDC TA	56289	150D105X9035A2
A4C12	0160-2305	2	1	CAPACITOR-FXD 5000PF +-2% 300VDC MICA	28480	0160-2305
A4C13	0160-0174	9		CAPACITOR-FXD .47UF +80-20% 25VDC CER	28480	0160-0174
A4C14	0160-0174	9		CAPACITOR-FXD .47UF +80-20% 25VDC CER	28480	0160-0174
A4C15	0160-0174	9		CAPACITOR-FXD .47UF +80-20% 25VDC CER	28480	0160-0174
A4C16	0160-0174	9		CAPACITOR-FXD .47UF +80-20% 25VDC CER	28480	0160-0174
A4C17	0160-0174	9		CAPACITOR-FXD .47UF +80-20% 25VDC CER	28480	0160-0174
A4C18	0160-0174	9		CAPACITOR-FXD .47UF +80-20% 25VDC CER	28480	0160-0174
A4C19	0160-2331	4	2	CAPACITOR-FXD 8200PF +-1% 100VDC MICA	28480	0160-2331
A4C20	0160-0174	9		CAPACITOR-FXD .47UF +80-20% 25VDC CER	28480	0160-0174
A4C21	0160-2331	4		CAPACITOR-FXD 8200PF +-1% 100VDC MICA	28480	0160-2331
A4C22	0160-0161	4	7	CAPACITOR-FXD .01UF +-10% 200VDC POLYE	28480	0160-0161
A4C23	0160-0174	9		CAPACITOR-FXD .47UF +80-20% 25VDC CER	28480	0160-0174
A4CR1	1902-3105	7	1	DIODE-ZNR 5.62V 2% DO-7 PD=.4W TC=+.016%	28480	1902-3105
A4CR2	1901-0040	1		DIODE-SWITCHING 30V 50MA 2NS DO-35	28480	1901-0040
A4IC1	1820-0055	6	1	IC CNTR TTL DECD SYNCHRO POS-EDGE-TRIG	01295	SN7490AN
A4L1	9140-0129	1	6	COIL-MLD 220UH 5% Q=65 .155Dx.375LG-NOM	28480	9140-0129
A4L2	9140-0129	1		COIL-MLD 220UH 5% Q=65 .155Dx.375LG-NOM	28480	9140-0129
A4L3	9140-0129	1		COIL-MLD 220UH 5% Q=65 .155Dx.375LG-NOM	28480	9140-0129
A4L4	9100-1647	6	2	COIL-MLD 470UH 5% Q=65 .190Dx.44LG-NOM	28480	9100-1647
A4L5	9100-1647	6		COIL-MLD 470UH 5% Q=65 .190Dx.44LG-NOM	28480	9100-1647
A4Q1	1854-0005	7		TRANSISTOR NPN 2N708 SI TO-18 PD=360MW	04713	2N708
A4Q2	1854-0005	7		TRANSISTOR NPN 2N708 SI TO-18 PD=360MW	04713	2N708
A4Q3	1854-0003	5		TRANSISTOR NPN SI TO-39 PD=800MW	28480	1854-0003
A4Q4	1854-0005	7		TRANSISTOR NPN 2N708 SI TO-18 PD=360MW	04713	2N708
A4Q5	1853-0010	2	2	TRANSISTOR PNP SI TO-18 PD=360MW	28480	1853-0010
A4Q6	1853-0010	2		TRANSISTOR PNP SI TO-18 PD=360MW	28480	1853-0010
A4Q7	1854-0005	7		TRANSISTOR NPN 2N708 SI TO-18 PD=360MW	04713	2N708
A4Q8	1854-0005	7		TRANSISTOR NPN 2N708 SI TO-18 PD=360MW	04713	2N708
A4Q9	1854-0005	7		TRANSISTOR NPN 2N708 SI TO-18 PD=360MW	04713	2N708
A4R1	0757-0951	5		RESISTOR 13K 2% .125W F TC=0+-100	24546	C4-1/8-T0-1302-G
A4R2	0757-0944	6		RESISTOR 6.8K 2% .125W F TC=0+-100	24546	C4-1/8-T0-6801-G
A4R3	0757-0893	4		RESISTOR 51 2% .125W F TC=0+-100	24546	C4-1/8-T0-51R0-G
A4R4	0757-0893	4		RESISTOR 51 2% .125W F TC=0+-100	24546	C4-1/8-T0-51R0-G
A4R5	0757-0927	5	3	RESISTOR 1.3K 2% .125W F TC=0+-100	24546	C4-1/8-T0-1301-G
A4R6	0757-0927	5		RESISTOR 1.3K 2% .125W F TC=0+-100	24546	C4-1/8-T0-1301-G
A4R7	0757-0917	3		RESISTOR 510 2% .125W F TC=0+-100	24546	C4-1/8-T0-511-G
A4R8	0757-0915	1	2	RESISTOR 430 2% .125W F TC=0+-100	24546	C4-1/8-T0-431-G
A4R9	0757-0927	5		RESISTOR 1.3K 2% .125W F TC=0+-100	24546	C4-1/8-T0-1301-G
A4R10	0757-0900	4		RESISTOR 100 2% .125W F TC=0+-100	24546	C4-1/8-T0-101-G

See introduction to this section for ordering information
*Indicates factory selected value

Table 6-2. Replaceable Parts (Continued)

Reference Designation	HP Part Number	C D	Qty	Description	Mfr Code	Mfr Part Number
A4R11	0757-1060	9	1	RESISTOR 196 1% .5W F TC=0+-100	28480	0757-1060
A4R12	0757-0938	8	3	RESISTOR 3.9K 2% .125W F TC=0+-100	24546	C4-1/8-T0-3901-G
A4R13	0757-0935	5		RESISTOR 3K 2% .125W F TC=0+-100	24546	C4-1/8-T0-3001-G
A4R14	0757-0924	2		RESISTOR 1K 2% .125W F TC=0+-100	24546	C4-1/8-T0-1001-G
A4R15	0757-0941	3	6	RESISTOR 5.1K 2% .125W F TC=0+-100	24546	C4-1/8-T0-5101-G
A4R16	0757-0941	3		RESISTOR 5.1K 2% .125W F TC=0+-100	24546	C4-1/8-T0-5101-G
A4R17	0757-0935	5		RESISTOR 3K 2% .125W F TC=0+-100	24546	C4-1/8-T0-3001-G
A4R18	0757-0900	4		RESISTOR 100 2% .125W F TC=0+-100	24546	C4-1/8-T0-101-G
A4R19	0757-0917	3		RESISTOR 510 2% .125W F TC=0+-100	24546	C4-1/8-T0-511-G
A4R20	0757-0929	7		RESISTOR 1.6K 2% .125W F TC=0+-100	24546	C4-1/8-T0-1601-G
A4R21	0757-0940	2		RESISTOR 4.7K 2% .125W F TC=0+-100	24546	C4-1/8-T0-4701-G
A4R22	0757-0929	7		RESISTOR 1.6K 2% .125W F TC=0+-100	24546	C4-1/8-T0-1601-G
A4R23	0757-0936	6		RESISTOR 3.3K 2% .125W F TC=0+-100	24546	C4-1/8-T0-3301-G
A4R24	0757-0907	1		RESISTOR 200 2% .125W F TC=0+-100	24546	C4-1/8-T0-201-G
A4R25	0757-0918	4	2	RESISTOR 560 2% .125W F TC=0+-100	24546	C4-1/8-T0-561-G
A4R26	0757-0900	4		RESISTOR 100 2% .125W F TC=0+-100	24546	C4-1/8-T0-101-G
A4R27	0757-0926	4	2	RESISTOR 1.2K 2% .125W F TC=0+-100	24546	C4-1/8-T0-1201-G
A4R28	0757-0918	4		RESISTOR 560 2% .125W F TC=0+-100	24546	C4-1/8-T0-561-G
A4R29	0757-0932	2	1	RESISTOR 2.2K 2% .125W F TC=0+-100	24546	C4-1/8-T0-2201-G
A4R30	0757-0907	1		RESISTOR 200 2% .125W F TC=0+-100	24546	C4-1/8-T0-201-G
A4R31	0757-0911	7	3	RESISTOR 300 2% .125W F TC=0+-100	24546	C4-1/8-T0-301-G
A4R32	0757-0915	1		RESISTOR 430 2% .125W F TC=0+-100	24546	C4-1/8-T0-431-G
A4R33*	0757-0897	8	3	RESISTOR 75 2% .125W F TC=0+-100	24546	C4-1/8-T0-75R0-G
A4R34	0757-0922	0	2	RESISTOR 820 2% .125W F TC=0+-100	24546	C4-1/8-T0-821-G
A4R35	0757-0942	4		RESISTOR 5.6K 2% .125W F TC=0+-100	24546	C4-1/8-T0-5601-G
A4T1	05061-8007	5	2	TRANSFORMER, 1 MHZ OUTPUT	28480	05061-8007
A4T2	107A-9C	1	1	TRANSFORMER ASSEMBLY, 100 KHZ	28480	107A-9C
A5				FOR CALL-OUTS OF COMP., SEE TABLE 6-4.		
A6	05065-6016	6	1	BOARD ASSEMBLY, 1 MHZ DIVIDER	28480	05065-6016
A6C1	0160-0161	4		CAPACITOR-FXD .01UF +-10% 200VDC POLYE	28480	0160-0161
A6C2	0180-0113	8		CAPACITOR-FXD 100UF+20-15% 30VDC TA	06001	69F355G7
A6C3	0160-0127	2		CAPACITOR-FXD 1UF +-20% 25VDC CER	28480	0160-0127
A6C4	0160-0127	2		CAPACITOR-FXD 1UF +-20% 25VDC CER	28480	0160-0127
A6C5	0140-0178	1	1	CAPACITOR-FXD 560PF +-2% 300VDC MICA	72136	DM15F561G0300WV1CR
A6C6	0160-0161	4		CAPACITOR-FXD .01UF +-10% 200VDC POLYE	28480	0160-0161
A6C7	0150-0121	5		CAPACITOR-FXD .1UF +80-20% 50VDC CER	28480	0150-0121
A6C8	0160-0161	4		CAPACITOR-FXD .01UF +-10% 200VDC POLYE	28480	0160-0161
A6C9	0150-0121	5		CAPACITOR-FXD .1UF +80-20% 50VDC CER	28480	0150-0121
A6C10	0140-0176	9	4	CAPACITOR-FXD 100PF +-2% 300VDC MICA	72136	DM15F101G0300WV1CR
A6C11	0140-0179	2		CAPACITOR-FXD 1000PF +-2% 300VDC MICA	72136	DM19F102G0300WV1CR
A6C12	0140-0208	8	1	CAPACITOR-FXD 680PF +-5% 300VDC MICA	72136	DM15F681J0300WV1CR
A6C13	0160-0161	4		CAPACITOR-FXD .01UF +-10% 200VDC POLYE	28480	0160-0161
A6C14	0140-0221	5	1	CAPACITOR-FXD 220PF +-1% 300VDC MICA	72136	DM15F221F0300WV1C
A6C15	0160-0161	4		CAPACITOR-FXD .01UF +-10% 200VDC POLYE	28480	0160-0161
A6C16	0140-0231	7	1	CAPACITOR-FXD 440PF +-1% 300VDC MICA	72136	DM15F441F0300WV1C
A6C17	0150-0121	5		CAPACITOR-FXD .1UF +80-20% 50VDC CER	28480	0150-0121
A6C18	0150-0121	5		CAPACITOR-FXD .1UF +80-20% 50VDC CER	28480	0150-0121
A6C19	0160-2221	1	1	CAPACITOR-FXD 1300PF +-5% 300VDC MICA	28480	0160-2221
A6C20	0140-0204	4	2	CAPACITOR-FXD 47PF +-5% 500VDC MICA	72136	DM15E470J0500WV1CR
A6C21	0121-0046	2		CAPACITOR-V TRMR-CER 9-35PF 200V PC-MTG	52763	304322 9/35PF N650
A6C22	0140-0179	2		CAPACITOR-FXD 1000PF +-2% 300VDC MICA	72136	DM19F102G0300WV1CR
A6C23	0150-0121	5		CAPACITOR-FXD .1UF +80-20% 50VDC CER	28480	0150-0121
A6C24	0140-0159	8	1	CAPACITOR-FXD 3000PF +-2% 300VDC MICA	72136	DM19F302G0300WV1CR
A6C25	0160-0127	2		CAPACITOR-FXD 1UF +-20% 25VDC CER	28480	0160-0127
A6C26	0140-0180	5	1	CAPACITOR-FXD 2000PF +-2% 300VDC MICA	72136	DM19F202G0300WV1CR
A6C27	0150-0121	5		CAPACITOR-FXD .1UF +80-20% 50VDC CER	28480	0150-0121
A6C28	0150-0121	5		CAPACITOR-FXD .1UF +80-20% 50VDC CER	28480	0150-0121
A6C29	0150-0121	5		CAPACITOR-FXD .1UF +80-20% 50VDC CER	28480	0150-0121
A6CR1	1901-0040	1		DIODE-SWITCHING 30V 50MA 2NS DO-35	28480	1901-0040
A6CR2	1901-0040	1		DIODE-SWITCHING 30V 50MA 2NS DO-35	28480	1901-0040
A6CR3	1902-3125	1		DIODE-ZNR 6.98V 2% DO-7 PD=.4W TC=+.045%	28480	1902-3125
A6CR4	1901-0040	1		DIODE-SWITCHING 30V 50MA 2NS DO-35	28480	1901-0040
A6CR5	1901-0040	1		DIODE-SWITCHING 30V 50MA 2NS DO-35	28480	1901-0040
A6CR6	1901-0040	1		DIODE-SWITCHING 30V 50MA 2NS DO-35	28480	1901-0040
A6CR7	1901-0040	1		DIODE-SWITCHING 30V 50MA 2NS DO-35	28480	1901-0040
A6L1	9140-0129	1		COIL-MLD 220UH 5% Q=65 .155Dx.375LG-NOM	28480	9140-0129
A6L2	9140-0107	5	1	COIL-MLD 27UH 10% Q=65 .185Dx.437LG-NOM	28480	9140-0107
A6L3	9140-0129	1		COIL-MLD 220UH 5% Q=65 .155Dx.375LG-NOM	28480	9140-0129
A6L4	9140-0118	8	2	COIL-MLD 500UH 5% Q=65 .19Dx.44LG-NOM	28480	9140-0118
A6L5	9140-0118	8		COIL-MLD 500UH 5% Q=65 .19Dx.44LG-NOM	28480	9140-0118

See introduction to this section for ordering information
*Indicates factory selected value

Table 6-2. Replaceable Parts (Continued)

Reference Designation	HP Part Number	C D	Qty	Description	Mfr Code	Mfr Part Number
A6L6	9140-0129	1		COIL-MLD 220UH 5% Q=65 .155DX.375LG-NOM	28480	9140-0129
A6Q1	1854-0005	7		TRANSISTOR NPN 2N708 SI TO-18 PD=360MW	04713	2N708
A6Q2	1854-0003	5		TRANSISTOR NPN SI TO-39 PD=800MW	28480	1854-0003
A6Q3	1854-0003	5		TRANSISTOR NPN SI TO-39 PD=800MW	28480	1854-0003
A6Q4	1854-0005	7		TRANSISTOR NPN 2N708 SI TO-18 PD=360MW	04713	2N708
A6Q5	1855-0056	0	1	TRANSISTOR J-FET P-CHAN D-MODE TO-92 SI	07263	2N4342
A6Q6	1854-0005	7		TRANSISTOR NPN 2N708 SI TO-18 PD=360MW	04713	2N708
A6Q7	1854-0023	9		TRANSISTOR NPN SI TO-18 PD=360MW	28480	1854-0023
A6Q8	1854-0005	7		TRANSISTOR NPN 2N708 SI TO-18 PD=360MW	04713	2N708
A6Q9	1854-0005	7		TRANSISTOR NPN 2N708 SI TO-18 PD=360MW	04713	2N708
A6Q10	1854-0003	5		TRANSISTOR NPN SI TO-39 PD=800MW	28480	1854-0003
A6R1	0757-0900	4		RESISTOR 100 2% .125W F TC=0+-100	24546	C4-1/8-T0-101-G
A6R2	0757-0940	2		RESISTOR 4.7K 2% .125W F TC=0+-100	24546	C4-1/8-T0-4701-G
A6R3	0757-0921	9	1	RESISTOR 750 2% .125W F TC=0+-100	24546	C4-1/8-T0-751-G
A6R4	0757-0936	6		RESISTOR 3.3K 2% .125W F TC=0+-100	24546	C4-1/8-T0-3301-G
A6R5	0757-0893	4		RESISTOR 51 2% .125W F TC=0+-100	24546	C4-1/8-T0-51R0-G
A6R6	0757-0924	2		RESISTOR 1K 2% .125W F TC=0+-100	24546	C4-1/8-T0-1001-G
A6R7	0757-0897	8		RESISTOR 75 2% .125W F TC=0+-100	24546	C4-1/8-T0-75R0-G
A6R8	0757-0924	2		RESISTOR 1K 2% .125W F TC=0+-100	24546	C4-1/8-T0-1001-G
A6R9	0757-0924	2		RESISTOR 1K 2% .125W F TC=0+-100	24546	C4-1/8-T0-1001-G
A6R10	0757-0957	1		RESISTOR 24K 2% .125W F TC=0+-100	24546	C4-1/8-T0-2402-G
A6R11	0757-0929	7		RESISTOR 1.6K 2% .125W F TC=0+-100	24546	C4-1/8-T0-1601-G
A6R12	0757-0916	2	2	RESISTOR 470 2% .125W F TC=0+-100	24546	C4-1/8-T0-471-G
A6R13	0757-0893	4		RESISTOR 51 2% .125W F TC=0+-100	24546	C4-1/8-T0-51R0-G
A6R14	0757-0963	9	2	RESISTOR 43K 2% .125W F TC=0+-100	24546	C4-1/8-T0-4302-G
A6R15	0757-0955	9		RESISTOR 20K 2% .125W F TC=0+-100	24546	C4-1/8-T0-2002-G
A6R16	0757-0944	6		RESISTOR 6.8K 2% .125W F TC=0+-100	24546	C4-1/8-T0-6801-G
A6R17	0757-0930	0	2	RESISTOR 1.8K 2% .125W F TC=0+-100	24546	C4-1/8-T0-1801-G
A6R18	0757-0956	2	3	RESISTOR 27K 2% .125W F TC=0+-100	24546	C4-1/8-T0-2702-G
A6R19	0757-0976	4	6	RESISTOR 150K 2% .125W F TC=0+-100	24546	C4-1/8-T0-1502-G
A6R20	0757-0893	4		RESISTOR 51 2% .125W F TC=0+-100	24546	C4-1/8-T0-51R0-G
A6R21	0757-0917	3		RESISTOR 510 2% .125W F TC=0+-100	24546	C4-1/8-T0-511-G
A6R22	0757-0474	7	1	RESISTOR 243K 1% .125W F TC=0+-100	24546	C4-1/8-T0-2433-F
A6R23	0757-0893	4		RESISTOR 51 2% .125W F TC=0+-100	24546	C4-1/8-T0-51R0-G
A6R24	0757-0929	7		RESISTOR 1.6K 2% .125W F TC=0+-100	24546	C4-1/8-T0-1601-G
A6R25	0757-0940	2		RESISTOR 4.7K 2% .125W F TC=0+-100	24546	C4-1/8-T0-4701-G
A6R26	0757-0893	4		RESISTOR 51 2% .125W F TC=0+-100	24546	C4-1/8-T0-51R0-G
A6R27	0757-0952	6	8	RESISTOR 15K 2% .125W F TC=0+-100	24546	C4-1/8-T0-1502-G
A6R28	0757-0948	0		RESISTOR 10K 2% .125W F TC=0+-100	24546	C4-1/8-T0-1002-G
A6R29	0757-0900	4		RESISTOR 100 2% .125W F TC=0+-100	24546	C4-1/8-T0-101-G
A6R30	0757-0924	2		RESISTOR 1K 2% .125W F TC=0+-100	24546	C4-1/8-T0-1001-G
A6R31	0757-0920	8		RESISTOR 680 2% .125W F TC=0+-100	24546	C4-1/8-T0-681-G
A6R32*	0757-0893	4	18	RESISTOR 51 2% .125W F TC=0+-100	24546	C4-1/8-T0-51R0-G
A6R33	0757-0948	0		RESISTOR 10K 2% .125W F TC=0+-100	24546	C4-1/8-T0-1002-G
A6R34	0757-0922	0		RESISTOR 820 2% .125W F TC=0+-100	24546	C4-1/8-T0-821-G
A6R35	0757-0942	4		RESISTOR 5.6K 2% .125W F TC=0+-100	24546	C4-1/8-T0-5601-G
A6T1	05061-8006	3	1	TRANSFORMER, 5 MHZ INPUT	28480	05061-8006
A6T2	05061-8005	1	1	TRANSFORMER, 1 MHZ-4 MHZ	28480	05061-8005
A6T3	05061-8007	5		TRANSFORMER, 1 MHZ OUTPUT	28480	05061-8007
A7	05065-6080	1	1	MODULE ASSEMBLY, AC AMPLIFIER	28480	05065-6080
	0340-0119	4		TERMINAL-STUD SGL-PIN PRESS-MTG	28480	0340-0119
	0510-0207	2		THREADED INSERT-STDF 4-40 .188-LG STL	28480	0510-0207
	1250-1262	0	1		28480	1250-1262
	5065-0032	1	1	COVER, SIGNAL AMPLIFIER	28480	5065-0032
	05065-0033	6	1	CHASSIS, SIGNAL AMPLIFIER	28480	05065-0033
	05065-2024	9	1	PLATE, END	28480	05065-2024
A7A1	05065-6079	8	1	BOARD ASSEMBLY, AC AMPLIFIER (NOT FOR REPLACEMENT) FOR REPLACEMENT ORDER 05065-6080	28480	05065-6079
A7A1C1	0180-0116	1		CAPACITOR-FXD 6.8UF+-10% 35VDC TA	56289	150D685X9035B2
A7A1C2	0180-0106	9		CAPACITOR-FXD 60UF+-20% 6VDC TA	56289	150D606X0006B2
A7A1C3	0180-0113	8		CAPACITOR-FXD 100UF+20-15% 30VDC TA	08001	69F355G7
A7A1C4	0180-0291	3		CAPACITOR-FXD 1UF+-10% 35VDC TA	56289	150D105X9035A2
A7A1C5	0170-0086	3	2	CAPACITOR-FXD .22UF +-20% 50VDC POLYE	84411	601CPE2240R5W2
A7A1C6	0160-0981	6	2	CAPACITOR-FXD .068UF +-5% 200VDC POLYE	56289	292P68352
A7A1C7	0160-0180	7	4	CAPACITOR-FXD .033UF +-5% 200VDC POLYE	28480	0160-0180
A7A1C8	0160-0180	7		CAPACITOR-FXD .033UF +-5% 200VDC POLYE	28480	0160-0180
A7A1C9	0180-0116	1		CAPACITOR-FXD 6.8UF+-10% 35VDC TA	56289	150D685X9035B2
A7A1C10	0180-0116	1		CAPACITOR-FXD 6.8UF+-10% 35VDC TA	56289	150D685X9035B2
A7A1C11	0180-0097	7	4	CAPACITOR-FXD 47UF+-10% 35VDC TA	56289	150D476X9035B2
A7A1C12	0170-0091	0	3	CAPACITOR-FXD .01213UF +-2% 50VDC	28480	0170-0091
A7A1C13	0170-0090	9	2	CAPACITOR-FXD .0252UF +-1% 50VDC POLYSTY	28480	0170-0090
A7A1C14	0170-0091	0		CAPACITOR-FXD .01213UF +-2% 50VDC	28480	0170-0091
A7A1C15	0180-0116	1		CAPACITOR-FXD 6.8UF+-10% 35VDC TA	56289	150D685X9035B2

See introduction to this section for ordering information
*Indicates factory selected value

Table 6-2. Replaceable Parts (Continued)

Reference Designation	HP Part Number	C D	Qty	Description	Mfr Code	Mfr Part Number
A7A1C16	0180-0197	8	2	CAPACITOR-FXD 2.2UF+-10% 20VDC TA	56289	150D225X9020A2
A7A1C17	0180-0160	5	1	CAPACITOR-FXD 22UF+-20% 35VDC TA	56289	150D226X0035R2
A7A1C18	0160-0981	6		CAPACITOR-FXD .068UF +-5% 200VDC POLYE	56289	292P68352
A7A1C19	0160-0180	7		CAPACITOR-FXD .033UF +-5% 200VDC POLYE	28480	0160-0180
A7A1C20	0160-0180	7		CAPACITOR-FXD .033UF +-5% 200VDC POLYE	28480	0160-0180
A7A1C21	0180-0097	7		CAPACITOR-FXD 47UF+-10% 35VDC TA	56289	150D476X9035B2
A7A1C22	0180-0097	7		CAPACITOR-FXD 47UF+-10% 35VDC TA	56289	150D476X9035B2
A7A1C23	0180-0197	8		CAPACITOR-FXD 2.2UF+-10% 20VDC TA	56289	150D225X9020A2
A7A1CR1	1902-3203	6		DIODE-ZNR 14.7V 5% DO-7 PD=.4W TC=+.057%	28480	1902-3203
A7A1CR2	1902-3203	6		DIODE-ZNR 14.7V 5% DO-7 PD=.4W TC=+.057%	28480	1902-3203
A7A1CR3				NOT ASSIGNED		
A7A1CR4	1901-0025	2		DIODE-GEN PRP 100V 200MA DO-7	28480	1901-0025
A7A1CR5	1901-0025	2		DIODE-GEN PRP 100V 200MA DO-7	28480	1901-0025
A7A1IC1	1820-0216	1	3	IC OP AMP GP 8-DIP-P	28480	1820-0216
A7A1IC2	1820-0216	1		IC OP AMP GP 8-DIP-P	28480	1820-0216
A7A1IC3	1820-0216	1		IC OP AMP GP 8-DIP-P	28480	1820-0216
A7A1Q1	1854-0023	9		TRANSISTOR NPN SI TO-18 PD=360MW	28480	1854-0023
A7A1Q2	1854-0023	9		TRANSISTOR NPN SI TO-18 PD=360MW	28480	1854-0023
A7A1Q3				NOT ASSIGNED		
A7A1Q4				NOT ASSIGNED		
A7A1Q5	1854-0003	5		TRANSISTOR NPN SI TO-39 PD=800MW	28480	1854-0003
A7A1Q6	1854-0023	9		TRANSISTOR NPN SI TO-18 PD=360MW	28480	1854-0023
A7A1Q7	1854-0003	5		TRANSISTOR NPN SI TO-39 PD=800MW	28480	1854-0003
A7A1Q8				NOT ASSIGNED		
A7A1Q9	1854-0023	9		TRANSISTOR NPN SI TO-18 PD=360MW	28480	1854-0023
A7A1R1	0757-0965	1	10	RESISTOR 51K 2% .125W F TC=0+-100	24546	C4-1/8-T0-5102-G
A7A1R2	0698-3459	8	2	RESISTOR 383K 1% .125W F TC=0+-100	28480	0698-3459
A7A1R3	2100-1659	3	1	RESISTOR-TRMR 5K 5% WW SIDE-ADJ 22-TRN	32997	3057P-1-502
A7A1R4	0757-0965	1		RESISTOR 51K 2% .125W F TC=0+-100	24546	C4-1/8-T0-5102-G
A7A1R5	0698-3459	8		RESISTOR 383K 1% .125W F TC=0+-100	28480	0698-3459
A7A1R6	0757-0965	1		RESISTOR 51K 2% .125W F TC=0+-100	24546	C4-1/8-T0-5102-G
A7A1R7	0757-0903	7	1	RESISTOR 130 2% .125W F TC=0+-100	24546	C4-1/8-T0-131-G
A7A1R8	0757-0965	1		RESISTOR 51K 2% .125W F TC=0+-100	24546	C4-1/8-T0-5102-G
A7A1R9	0757-0924	2		RESISTOR 1K 2% .125W F TC=0+-100	24546	C4-1/8-T0-1001-G
A7A1R10	0757-0924	2		RESISTOR 1K 2% .125W F TC=0+-100	24546	C4-1/8-T0-1001-G
A7A1R11	0757-0955	9		RESISTOR 20K 2% .125W F TC=0+-100	24546	C4-1/8-T0-2002-G
A7A1R12	0757-0931	1		RESISTOR 2K 2% .125W F TC=0+-100	24546	C4-1/8-T0-2001-G
A7A1R13	0757-0959	3		RESISTOR 30K 2% .125W F TC=0+-100	24546	C4-1/8-T0-3002-G
A7A1R14	0698-4308	8	4	RESISTOR 16.9K 1% .125W F TC=0+-100	24546	C4-1/8-T0-1692-F
A7A1R15	0698-5469	4	2	RESISTOR 8.665K 1% .125W F TC=0+-100	24546	C4-1/8-T0-8665R-F
A7A1R16	0698-4308	8		RESISTOR 16.9K 1% .125W F TC=0+-100	24546	C4-1/8-T0-1692-F
A7A1R17	2100-1758	3	1	RESISTOR-TRMR 1K 5% WW SIDE-ADJ 1-TRN	28480	2100-1758
A7A1R18	0757-0976	4		RESISTOR 150K 2% .125W F TC=0+-100	24546	C4-1/8-T0-1502-G
A7A1R19	0757-0976	4		RESISTOR 150K 2% .125W F TC=0+-100	24546	C4-1/8-T0-1502-G
A7A1R20	0757-0948	0		RESISTOR 10K 2% .125W F TC=0+-100	24546	C4-1/8-T0-1002-G
A7A1R21	0757-0955	9		RESISTOR 20K 2% .125W F TC=0+-100	24546	C4-1/8-T0-2002-G
A7A1R22	0757-0911	7		RESISTOR 300 2% .125W F TC=0+-100	24546	C4-1/8-T0-301-G
A7A1R23	0757-0955	9		RESISTOR 20K 2% .125W F TC=0+-100	24546	C4-1/8-T0-2002-G
A7A1R24	0698-3129	9		RESISTOR 1M 1% .125W CF TC=0-500	91637	DC-1/8-1004-F
A7A1R25	0698-0077	0	2	RESISTOR 93.1K 1% .125W F TC=0+-100	03888	PME55-1/8-T0-9312-F
A7A1R26	0757-0457	6	2	RESISTOR 47.5K 1% .125W F TC=0+-100	24546	C4-1/8-T0-4752-F
A7A1R27	0698-0077	0		RESISTOR 93.1K 1% .125W F TC=0+-100	03888	PME55-1/8-T0-9312-F
A7A1R28	0757-0948	0		RESISTOR 10K 2% .125W F TC=0+-100	24546	C4-1/8-T0-1002-G
A7A1R29	2100-1761	8	1	RESISTOR-TRMR 10K 5% WW SIDE-ADJ 1-TRN	28480	2100-1761
A7A1R30	0757-0976	4		RESISTOR 150K 2% .125W F TC=0+-100	24546	C4-1/8-T0-1502-G
A7A1R31	0757-0976	4		RESISTOR 150K 2% .125W F TC=0+-100	24546	C4-1/8-T0-1502-G
A7A1R32	0757-0924	2		RESISTOR 1K 2% .125W F TC=0+-100	24546	C4-1/8-T0-1001-G
A7A1R33	0757-0952	6		RESISTOR 15K 2% .125W F TC=0+-100	24546	C4-1/8-T0-1502-G
A7A1R34	0757-0948	0		RESISTOR 10K 2% .125W F TC=0+-100	24546	C4-1/8-T0-1002-G
A7A1R35	0698-4308	8		RESISTOR 16.9K 1% .125W F TC=0+-100	24546	C4-1/8-T0-1692-F
A7A1R36	0698-5469	4		RESISTOR 8.665K 1% .125W F TC=0+-100	24546	C4-1/8-T0-8665R-F
A7A1R37	0698-4308	8		RESISTOR 16.9K 1% .125W F TC=0+-100	24546	C4-1/8-T0-1692-F
A7A1R38	0757-0976	4		RESISTOR 150K 2% .125W F TC=0+-100	24546	C4-1/8-T0-1502-G
A7A1R39	0757-0955	9		RESISTOR 20K 2% .125W F TC=0+-100	24546	C4-1/8-T0-2002-G
A7A1R40	0757-0911	7		RESISTOR 300 2% .125W F TC=0+-100	24546	C4-1/8-T0-301-G
A7A1R41	0698-3129	9		RESISTOR 1M 1% .125W CF TC=0-500	91637	DC-1/8-1004-F
A7A1R42	0757-0941	3		RESISTOR 5.1K 2% .125W F TC=0+-100	24546	C4-1/8-T0-5101-G
A7A1R43	0757-0941	3		RESISTOR 5.1K 2% .125W F TC=0+-100	24546	C4-1/8-T0-5101-G
				A7A1 MISCELLANEOUS PARTS		
	0340-0037	5		TERMINAL-STUD DBL-TUR PRESS-MTG	28480	0340-0037
	0340-0039	7		TERMINAL BUSHING - TEFLON; MOUNTS IN	28480	0340-0039

See introduction to this section for ordering information
*Indicates factory selected value

Table 6-2. Replaceable Parts (Continued)

Reference Designation	HP Part Number	C D	Qty	Description	Mfr Code	Mfr Part Number
	05065-6013	0	1	BOARD ASSEMBLY, PHASE DETECTOR	28480	05065-6013
A8C1	0170-0091	0		CAPACITOR-FXD .01213UF +-2% 50VDC	28480	0170-0091
A8C2	0180-0117	2	6	CAPACITOR-FXD 2.7UF+-10% 35VDC TA	56289	150D275X9035B2
A8C3	0170-0090	9		CAPACITOR-FXD .0252UF +-1% 50VDC POLYSTY	28480	0170-0090
A8C4	0180-0116	1		CAPACITOR-FXD 6.8UF+-10% 35VDC TA	56289	150D685X9035B2
A8C5	0140-0209	9	1	CAPACITOR-FXD 5PF +-10% 500VDC MICA	72136	DM15C050K0500WV1CR
A8C6	0150-0121	5		CAPACITOR-FXD .1UF +80-20% 50VDC CER	28480	0150-0121
A8C7	0140-0176	9		CAPACITOR-FXD 100PF +-2% 300VDC MICA	72136	DM15F101G0300WV1CR
A8C8	0160-0370	7	3	CAPACITOR-FXD 20PF +-5% 500VDC MICA	28480	0160-0370
A8C9	0180-0113	8		CAPACITOR-FXD 100UF+20-15% 30VDC TA	06001	69F355G7
A8C10	0180-0113	8		CAPACITOR-FXD 100UF+20-15% 30VDC TA	06001	69F355G7
A8C11	0140-0204	4		CAPACITOR-FXD 47PF +-5% 500VDC MICA	72136	DM15E470J0500WV1CR
A8C12	0160-0370	7		CAPACITOR-FXD 20PF +-5% 500VDC MICA	28480	0160-0370
A8C13	0150-0093	0		CAPACITOR-FXD .01UF +80-20% 100VDC CER	28480	0150-0093
A8C14	0160-0370	7		CAPACITOR-FXD 20PF +-5% 500VDC MICA	28480	0160-0370
A8C15	0180-0100	3	16	CAPACITOR-FXD 4.7UF+-10% 35VDC TA	56289	150D475X9035B2
A8C16	0180-0100	3		CAPACITOR-FXD 4.7UF+-10% 35VDC TA	56289	150D475X9035B2
A8C17	0160-0869	9	2	CAPACITOR-FXD .47UF +-10% 50VDC POLYE	01002	65F17AA474
A8C18	0160-0869	9		CAPACITOR-FXD .47UF +-10% 50VDC POLYE	01002	65F17AA474
A8C19	0170-0084	3		CAPACITOR-FXD .22UF +-20% 50VDC POLYE	84411	601CPE2240R5M2
A8C20	0180-0113	8		CAPACITOR-FXD 100UF+20-15% 30VDC TA	06001	69F355G7
A8C21	0180-0291	3		CAPACITOR-FXD 1UF+-10% 35VDC TA	56289	150D105X9035A2
A8C22	0170-0085	2	3	CAPACITOR-FXD .1UF +-20% 50VDC POLYE	84411	601PE1040R5M3
A8C23	0180-0291	3		CAPACITOR-FXD 1UF+-10% 35VDC TA	56289	150D105X9035A2
A8C24	0170-0094	3		CAPACITOR-FXD .047UF +-20% 50VDC POLYE	84411	602-4730R5M2
A8C25	0170-0085	2		CAPACITOR-FXD .1UF +-20% 50VDC POLYE	84411	601PE1040R5M3
A8C26	0170-0085	2		CAPACITOR-FXD .1UF +-20% 50VDC POLYE	84411	601PE1040R5M3
A8CR1	1901-0033	2	6	DIODE-GEN PRP 180V 200MA DO-7	28480	1901-0033
A8CR2	1901-0033	2		DIODE-GEN PRP 180V 200MA DO-7	28480	1901-0033
A8CR3	1901-0040	1		DIODE-SWITCHING 30V 50MA 2NS DO-35	28480	1901-0040
A8CR4	1901-0040	1		DIODE-SWITCHING 30V 50MA 2NS DO-35	28480	1901-0040
A8CR5	1901-0040	1		DIODE-SWITCHING 30V 50MA 2NS DO-35	28480	1901-0040
A8CR6	1901-0033	2		DIODE-GEN PRP 180V 200MA DO-7	28480	1901-0033
A8CR7	1901-0033	2		DIODE-GEN PRP 180V 200MA DO-7	28480	1901-0033
A8E1	9170-0029	3	3	CORE-SHIELDING BEAD	28480	9170-0029
A8E2	9170-0029	3		CORE-SHIELDING BEAD	28480	9170-0029
A8E3	9170-0029	3		CORE-SHIELDING BEAD	28480	9170-0029
A8Q1	1854-0023	9		TRANSISTOR NPN SI TO-18 PD=360MW	28480	1854-0023
A8Q2	1854-0023	9		TRANSISTOR NPN SI TO-18 PD=360MW	28480	1854-0023
A8Q3	1854-0023	9		TRANSISTOR NPN SI TO-18 PD=360MW	28480	1854-0023
A8Q4	1854-0005	7		TRANSISTOR NPN 2N708 SI TO-18 PD=360MW	04713	2N708
A8Q5	1854-0005	7		TRANSISTOR NPN 2N708 SI TO-18 PD=360MW	04713	2N708
A8Q6	1854-0005	7		TRANSISTOR NPN 2N708 SI TO-18 PD=360MW	04713	2N708
A8Q7	1854-0005	7		TRANSISTOR NPN 2N708 SI TO-18 PD=360MW	04713	2N708
A8Q8	1854-0023	9		TRANSISTOR NPN SI TO-18 PD=360MW	28480	1854-0023
A8Q9	1854-0023	9		TRANSISTOR NPN SI TO-18 PD=360MW	28480	1854-0023
A8Q10	1854-0023	9		TRANSISTOR NPN SI TO-18 PD=360MW	28480	1854-0023
A8Q11	1854-0023	9		TRANSISTOR NPN SI TO-18 PD=360MW	28480	1854-0023
A8Q12	1853-0005	5	2	TRANSISTOR PNP 2N941 SI TO-18 PD=250MW	28480	1853-0005
A8Q13	1853-0005	5		TRANSISTOR PNP 2N941 SI TO-18 PD=250MW	28480	1853-0005
A8R1	0757-0948	0		RESISTOR 10K 2% .125W F TC=0+-100	24546	C4-1/8-T0-1002-G
A8R2	0757-0957	1		RESISTOR 24K 2% .125W F TC=0+-100	24546	C4-1/8-T0-2402-G
A8R3	0757-0957	1		RESISTOR 24K 2% .125W F TC=0+-100	24546	C4-1/8-T0-2402-G
A8R4	0757-0457	6		RESISTOR 47.5K 1% .125W F TC=0+-100	24546	C4-1/8-T0-4752-F
A8R5	0757-0959	3		RESISTOR 30K 2% .125W F TC=0+-100	24546	C4-1/8-T0-3002-G
A8R6	0757-0444	1	1	RESISTOR 12.1K 1% .125W F TC=0+-100	24546	C4-1/8-T0-1212-F
A8R7	0757-0450	9	1	RESISTOR 22.1K 1% .125W F TC=0+-100	24546	C4-1/8-T0-2212-F
A8R8	2100-1775	4	2	RESISTOR-TRMR 5K 5% WW TOP-ADJ 1-TRN	28480	2100-1775
A8R9	0757-0894	5	1	RESISTOR 56 1% .125W F TC=0+-100	24546	C4-1/8-T0-56R0-G
A8R10	0757-0948	0		RESISTOR 10K 2% .125W F TC=0+-100	24546	C4-1/8-T0-1002-G
A8R11	0757-0945	7	2	RESISTOR 7.5K 2% .125W F TC=0+-100	24546	C4-1/8-T0-7501-G
A8R12	0757-0972	0		RESISTOR 100K 2% .125W F TC=0+-100	24546	C4-1/8-T0-1002-G
A8R13	0757-0948	0		RESISTOR 10K 2% .125W F TC=0+-100	24546	C4-1/8-T0-1002-G
A8R14	0757-0972	0		RESISTOR 100K 2% .125W F TC=0+-100	24546	C4-1/8-T0-1002-G
A8R15	0757-0914	0	2	RESISTOR 390 2% .125W F TC=0+-100	24546	C4-1/8-T0-391-G
A8R16	0757-0957	1		RESISTOR 24K 2% .125W F TC=0+-100	24546	C4-1/8-T0-2402-G
A8R17	0757-0948	0		RESISTOR 10K 2% .125W F TC=0+-100	24546	C4-1/8-T0-1002-G
A8R18	0757-0948	0		RESISTOR 10K 2% .125W F TC=0+-100	24546	C4-1/8-T0-1002-G
A8R19	0757-0907	1		RESISTOR 200 2% .125W F TC=0+-100	24546	C4-1/8-T0-201-G
A8R20	0757-0948	0		RESISTOR 10K 2% .125W F TC=0+-100	24546	C4-1/8-T0-1002-G
A8R21	0757-0948	0		RESISTOR 10K 2% .125W F TC=0+-100	24546	C4-1/8-T0-1002-G
A8R22	0757-0935	5		RESISTOR 3K 2% .125W F TC=0+-100	24546	C4-1/8-T0-3001-G
A8R23	0757-0957	1		RESISTOR 24K 2% .125W F TC=0+-100	24546	C4-1/8-T0-2402-G
A8R24	0757-0958	2		RESISTOR 27K 2% .125W F TC=0+-100	24546	C4-1/8-T0-2702-G
A8R25	0757-0914	0		RESISTOR 390 2% .125W F TC=0+-100	24546	C4-1/8-T0-391-G

See introduction to this section for ordering information
*Indicates factory selected value

Table 6-2. Replaceable Parts (Continued)

Reference Designation	HP Part Number	C D	Qty	Description	Mfr Code	Mfr Part Number
A8R26	0757-0958	2		RESISTOR 27K 2% .125W F TC=0+-100	24546	C4-1/8-T0-2702-G
A8R27	0757-0957	1		RESISTOR 24K 2% .125W F TC=0+-100	24546	C4-1/8-T0-2402-G
A8R28	0757-0935	5		RESISTOR 3K 2% .125W F TC=0+-100	24546	C4-1/8-T0-3001-G
A8R29	0757-0928	6		RESISTOR 1.5K 2% .125W F TC=0+-100	24546	C4-1/8-T0-1501-G
A8R30	0757-0928	6		RESISTOR 1.5K 2% .125W F TC=0+-100	24546	C4-1/8-T0-1501-G
A8R31	0757-0928	6		RESISTOR 1.5K 2% .125W F TC=0+-100	24546	C4-1/8-T0-1501-G
A8R32	0757-0928	6		RESISTOR 1.5K 2% .125W F TC=0+-100	24546	C4-1/8-T0-1501-G
A8R33	0757-0952	6		RESISTOR 15K 2% .125W F TC=0+-100	24546	C4-1/8-T0-1502-G
A8R34	0757-0952	6		RESISTOR 15K 2% .125W F TC=0+-100	24546	C4-1/8-T0-1502-G
A8R35	2100-1777	6		RESISTOR-TRMR 20K 5% WW TOP-ADJ 1-TRN	28480	2100-1777
A8R36	0698-3431	6	2	RESISTOR 23.7 1% .125W F TC=0+-100	03888	PME55-1/8-T0-23R7-F
A8R37	0757-0952	6		RESISTOR 15K 2% .125W F TC=0+-100	24546	C4-1/8-T0-1502-G
A8R38	0757-0952	6		RESISTOR 15K 2% .125W F TC=0+-100	24546	C4-1/8-T0-1502-G
A8R39	0757-0964	0		RESISTOR 47K 2% .125W F TC=0+-100	24546	C4-1/8-T0-4702-G
A8R40	0757-0965	1		RESISTOR 51K 2% .125W F TC=0+-100	24546	C4-1/8-T0-5102-G
A8R41	0757-0964	0		RESISTOR 47K 2% .125W F TC=0+-100	24546	C4-1/8-T0-4702-G
A8R42	0757-0955	9		RESISTOR 20K 2% .125W F TC=0+-100	24546	C4-1/8-T0-2002-G
A8R43	2100-1923	4	1	RESISTOR-TRMR 50K 5% WW SIDE-ADJ 1-TRN	28480	2100-1923
A8R44	0727-0002	4	1	RESISTOR 3 1% .5W CF TC=0-500	28480	0727-0002
A8R45	0757-0965	1		RESISTOR 51K 2% .125W F TC=0+-100	24546	C4-1/8-T0-5102-G
A8R46	0698-3431	6		RESISTOR 23.7 1% .125W F TC=0+-100	03888	PME55-1/8-T0-23R7-F
A8R47	0757-0965	1		RESISTOR 51K 2% .125W F TC=0+-100	24546	C4-1/8-T0-5102-G
A8R48	0757-0931	1		RESISTOR 2K 2% .125W F TC=0+-100	24546	C4-1/8-T0-2001-G
A8T1	9100-0340	4	1	TRANSFORMER 1 V; 60 CPS	28480	9100-0340
A9	05065-6015	4	1	BOARD ASSEMBLY, INTEGRATOR	28480	05065-6015
A9C1	0160-0168	1	1	CAPACITOR-FXD .1UF +-10% 200VDC POLYE	28480	0160-0168
A9C2	0150-0121	5		CAPACITOR-FXD .1UF +80-20% 50VDC CER	28480	0150-0121
A9C3	0170-0044	3	1	CAPACITOR-FXD .5UF +-10% 600VDC POLYE	28480	0170-0044
A9C4	0160-0161	4		CAPACITOR-FXD .01UF +-10% 200VDC POLYE	28480	0160-0161
A9CR1	1902-0025	4	1	DIODE-ZNR 10V 5% DO-7 PD=.4W TC=+.06%	28480	1902-0025
A9CR2	1901-0040	1		DIODE-SWITCHING 30V 50MA 2NS DO-35	28480	1901-0040
A9CR3	1901-0040	1		DIODE-SWITCHING 30V 50MA 2NS DO-35	28480	1901-0040
A9CR4	1901-0040	1		DIODE-SWITCHING 30V 50MA 2NS DO-35	28480	1901-0040
A9CR5	1901-0040	1		DIODE-SWITCHING 30V 50MA 2NS DO-35	28480	1901-0040
A9CR6	1901-0040	1		DIODE-SWITCHING 30V 50MA 2NS DO-35	28480	1901-0040
A9CR7	1901-0040	1		DIODE-SWITCHING 30V 50MA 2NS DO-35	28480	1901-0040
A9CR8	1902-0040	3	2	DIODE-ZNR 14V 5% DO-7 PD=.4W TC=+.056%	28480	1902-0040
A9CR9	1902-0040	3		DIODE-ZNR 14V 5% DO-7 PD=.4W TC=+.056%	28480	1902-0040
A9CR10	1901-0040	1		DIODE-SWITCHING 30V 50MA 2NS DO-35	28480	1901-0040
A9Q1A	1855-0049	1	2	TRANSISTOR-JFET DUAL N-CHAN D-MODE SI	28480	1855-0049
A9Q1B	1855-0049	1		TRANSISTOR-JFET DUAL N-CHAN D-MODE SI	28480	1855-0049
A9Q2	1854-0003	5		TRANSISTOR NPN SI TO-39 PD=800MW	28480	1854-0003
A9Q3	1853-0066	8	1	TRANSISTOR PNP SI TO-92 PD=625MW	28480	1853-0066
A9R1	0757-0972	0		RESISTOR 100K 2% .125W F TC=0+-100	24546	C4-1/8-T0-1002-G
A9R2	0757-0965	1		RESISTOR 51K 2% .125W F TC=0+-100	24546	C4-1/8-T0-5102-G
A9R3	2100-1655	9	1	RESISTOR-TRMR 200 5% WW SIDE-ADJ 22-TRN	32997	3057P-1-201
A9R4	0757-0966	2	2	RESISTOR 56K 2% .125W F TC=0+-100	24546	C4-1/8-T0-5602-G
A9R5	0757-0965	1		RESISTOR 51K 2% .125W F TC=0+-100	24546	C4-1/8-T0-5102-G
A9R6	0757-0972	0		RESISTOR 100K 2% .125W F TC=0+-100	24546	C4-1/8-T0-1002-G
A9R7	0757-0909	3		RESISTOR 240 2% .125W F TC=0+-100	24546	C4-1/8-T0-241-G
A9R8	0757-0924	2		RESISTOR 1K 2% .125W F TC=0+-100	24546	C4-1/8-T0-1001-G
A9R9	0698-3127	7		RESISTOR 4.75M 2% .125W CF TC=0-1300	91637	DC-1/8-4754-G
A9R10	2100-1662	8	1	RESISTOR-TRMR 50K 5% WW SIDE-ADJ 22-TRN	32997	3057P-1-503
A9R11	0757-0924	2		RESISTOR 1K 2% .125W F TC=0+-100	24546	C4-1/8-T0-1001-G
A9R12	0757-0959	3		RESISTOR 30K 2% .125W F TC=0+-100	24546	C4-1/8-T0-3002-G
A9R13	0757-0941	3		RESISTOR 5.1K 2% .125W F TC=0+-100	24546	C4-1/8-T0-5101-G
A9R14	0757-0948	0		RESISTOR 10K 2% .125W F TC=0+-100	24546	C4-1/8-T0-1002-G
A9R15	0757-0948	0		RESISTOR 10K 2% .125W F TC=0+-100	24546	C4-1/8-T0-1002-G
A9R16	0757-0930	0		RESISTOR 1.8K 2% .125W F TC=0+-100	24546	C4-1/8-T0-1801-G
A9R17	0757-0948	0		RESISTOR 10K 2% .125W F TC=0+-100	24546	C4-1/8-T0-1002-G
A9R18	0757-0924	2		RESISTOR 1K 2% .125W F TC=0+-100	24546	C4-1/8-T0-1001-G
A9R19	0757-0924	2		RESISTOR 1K 2% .125W F TC=0+-100	24546	C4-1/8-T0-1001-G
A9R20	0757-0940	2		RESISTOR 4.7K 2% .125W F TC=0+-100	24546	C4-1/8-T0-4701-G
A9R21	0757-0935	5		RESISTOR 3K 2% .125W F TC=0+-100	24546	C4-1/8-T0-3001-G
A9R22	0757-0931	1		RESISTOR 2K 2% .125W F TC=0+-100	24546	C4-1/8-T0-2001-G
A9R23	0757-0955	9		RESISTOR 20K 2% .125W F TC=0+-100	24546	C4-1/8-T0-2002-G
A9R24	0757-0955	9		RESISTOR 20K 2% .125W F TC=0+-100	24546	C4-1/8-T0-2002-G
A9R25	0757-0955	9		RESISTOR 20K 2% .125W F TC=0+-100	24546	C4-1/8-T0-2002-G
A10	00105-6013	1		OSCILLATOR ASSY: 5 MHz FACTORY REPAIR ONLY. FOR REPLACEMENT, ORDER HP PART NO. 00105-6034	28480	00105-6013

See introduction to this section for ordering information
*Indicates factory selected value

Table 6-2. Replaceable Parts (Continued)

Reference Designation	HP Part Number	C D	Qty	Description	Mfr Code	Mfr Part Number
A11	05065-6024	3	1	BOARD ASSEMBLY, CONTROLLER	28480	05065-6024
A11C1	0140-0188	3	1	CAPACITOR-FXD .05UF +-1% 300VDC MICA	72136	DM42F503F0300WV1CR
A11C2	0160-2278	8	2	CAPACITOR-FXD .034UF +-2% 100VDC MICA	28480	0160-2278
A11C3	0160-2278	8		CAPACITOR-FXD .034UF +-2% 100VDC MICA	28480	0160-2278
A11C4	0140-0186	1	1	CAPACITOR-FXD .02UF +-1% 300VDC MICA	72136	DM30F203F0300WV1CR
A11C5	0180-0100	3		CAPACITOR-FXD 4.7UF+-10% 35VDC TA	56289	150D475X9035B2
A11C6	0180-0100	3		CAPACITOR-FXD 4.7UF+-10% 35VDC TA	56289	150D475X9035B2
A11C7	0180-0100	3		CAPACITOR-FXD 4.7UF+-10% 35VDC TA	56289	150D475X9035B2
A11C8	0180-0100	3		CAPACITOR-FXD 4.7UF+-10% 35VDC TA	56289	150D475X9035B2
A11C9	0180-0100	3		CAPACITOR-FXD 4.7UF+-10% 35VDC TA	56289	150D475X9035B2
A11C10	0180-0100	3		CAPACITOR-FXD 4.7UF+-10% 35VDC TA	56289	150D475X9035B2
A11C11	0140-0176	9		CAPACITOR-FXD 100PF +-2% 300VDC MICA	72136	DM15F101G0300WV1CR
A11C12	0140-0176	9		CAPACITOR-FXD 100PF +-2% 300VDC MICA	72136	DM15F101G0300WV1CR
A11C13	0180-0100	3		CAPACITOR-FXD 4.7UF+-10% 35VDC TA	56289	150D475X9035B2
A11C14	0180-0100	3		CAPACITOR-FXD 4.7UF+-10% 35VDC TA	56289	150D475X9035B2
A11C15	0180-0100	3		CAPACITOR-FXD 4.7UF+-10% 35VDC TA	56289	150D475X9035B2
A11C16	0180-0100	3		CAPACITOR-FXD 4.7UF+-10% 35VDC TA	56289	150D475X9035B2
A11C17	0180-0100	3		CAPACITOR-FXD 4.7UF+-10% 35VDC TA	56289	150D475X9035B2
A11C18	0180-0100	3		CAPACITOR-FXD 4.7UF+-10% 35VDC TA	56289	150D475X9035B2
A11C19	0180-0228	6	2	CAPACITOR-FXD 22UF+-10% 15VDC TA	56289	150D226X9015B2
A11C20	0180-0228	6		CAPACITOR-FXD 22UF+-10% 15VDC TA	56289	150D226X9015B2
A11C21	0180-0100	3		CAPACITOR-FXD 4.7UF+-10% 35VDC TA	56289	150D475X9035B2
A11C22	0180-0100	3		CAPACITOR-FXD 4.7UF+-10% 35VDC TA	56289	150D475X9035B2
A11C23	0180-0049	9	2	CAPACITOR-FXD 20UF+75-10% 50VDC AL	56289	30D206G050CC2
A11C24	0180-0049	9		CAPACITOR-FXD 20UF+75-10% 50VDC AL	56289	30D206G050CC2
A11CR1	1901-0025	2		DIODE-GEN PRP 100V 200MA DO-7	28480	1901-0025
A11CR2	1901-0025	2		DIODE-GEN PRP 100V 200MA DO-7	28480	1901-0025
A11CR3	1901-0025	2		DIODE-GEN PRP 100V 200MA DO-7	28480	1901-0025
A11CR4	1901-0025	2		DIODE-GEN PRP 100V 200MA DO-7	28480	1901-0025
A11CR5	1901-0025	2		DIODE-GEN PRP 100V 200MA DO-7	28480	1901-0025
A11CR6	1901-0025	2		DIODE-GEN PRP 100V 200MA DO-7	28480	1901-0025
A11CR7	1901-0028	5	2	DIODE-PWR RECT 400V 750MA DO-29	28480	1901-0028
A11CR8	1901-0028	5		DIODE-PWR RECT 400V 750MA DO-29	28480	1901-0028
A11Q1	1854-0023	9		TRANSISTOR NPN SI TO-18 PD=360MW	28480	1854-0023
A11Q2	1854-0023	9		TRANSISTOR NPN SI TO-18 PD=360MW	28480	1854-0023
A11Q3	1854-0023	9		TRANSISTOR NPN SI TO-18 PD=360MW	28480	1854-0023
A11Q4	1854-0023	9		TRANSISTOR NPN SI TO-18 PD=360MW	28480	1854-0023
A11Q5	1854-0023	9		TRANSISTOR NPN SI TO-18 PD=360MW	28480	1854-0023
A11Q6	1854-0023	9		TRANSISTOR NPN SI TO-18 PD=360MW	28480	1854-0023
A11Q7	1854-0039	7	5	TRANSISTOR NPN 2N3053S SI TO-39 PD=1W	01928	2N3053S
A11Q8	1854-0039	7		TRANSISTOR NPN 2N3053S SI TO-39 PD=1W	01928	2N3053S
A11R1	0811-1777	1	2	RESISTOR 962.475 .1% .05W PWW TC=0+-10	28480	0811-1777
A11R2	0811-1777	1		RESISTOR 962.475 .1% .05W PWW TC=0+-10	28480	0811-1777
A11R3	0811-2603	4	2	RESISTOR 390 1% .125W PWW TC=0+-10	20940	135-1/8-D-391-F
A11R4	0811-2603	4		RESISTOR 390 1% .125W PWW TC=0+-10	20940	135-1/8-D-391-F
A11R5*	0811-2596	4	1	RESISTOR 430 1% .125W PWW TC=0+-10	20940	135-1/8-D-431-F
A11R6*	0811-2604	5	1	RESISTOR 180 1% .125W PWW TC=0+-10	20940	135-1/8-D-181-F
A11R7	0757-0893	4		RESISTOR 51 2% .125W F TC=0+-100	24546	C4-1/8-T0-51R0-G
A11R8	0757-0893	4		RESISTOR 51 2% .125W F TC=0+-100	24546	C4-1/8-T0-51R0-G
A11R9	0757-0939	9	4	RESISTOR 4.3K 2% .125W F TC=0+-100	24546	C4-1/8-T0-4301-G
A11R10	0757-0939	9		RESISTOR 4.3K 2% .125W F TC=0+-100	24546	C4-1/8-T0-4301-G
A11R11	0757-0939	9		RESISTOR 4.3K 2% .125W F TC=0+-100	24546	C4-1/8-T0-4301-G
A11R12	0757-0939	9		RESISTOR 4.3K 2% .125W F TC=0+-100	24546	C4-1/8-T0-4301-G
A11R13	0757-0931	1		RESISTOR 2K 2% .125W F TC=0+-100	24546	C4-1/8-T0-2001-G
A11R14	0757-0931	1		RESISTOR 2K 2% .125W F TC=0+-100	24546	C4-1/8-T0-2001-G
A11R15	0757-0955	9		RESISTOR 20K 2% .125W F TC=0+-100	24546	C4-1/8-T0-2002-G
A11R16	0757-0955	9		RESISTOR 20K 2% .125W F TC=0+-100	24546	C4-1/8-T0-2002-G
A11R17	0757-0900	4		RESISTOR 100 2% .125W F TC=0+-100	24546	C4-1/8-T0-101-G
A11R18	0757-0900	4		RESISTOR 100 2% .125W F TC=0+-100	24546	C4-1/8-T0-101-G
A11R19	0757-0904	8	2	RESISTOR 150 2% .125W F TC=0+-100	24546	C4-1/8-T0-151-G
A11R20	0757-0904	8		RESISTOR 150 2% .125W F TC=0+-100	24546	C4-1/8-T0-151-G
A11R21	0757-0913	9		RESISTOR 360 2% .125W F TC=0+-100	24546	C4-1/8-T0-361-G
A11R22	0757-0913	9		RESISTOR 360 2% .125W F TC=0+-100	24546	C4-1/8-T0-361-G
A11R23	0757-0913	9		RESISTOR 360 2% .125W F TC=0+-100	24546	C4-1/8-T0-361-G
A11R24	0757-0913	9		RESISTOR 360 2% .125W F TC=0+-100	24546	C4-1/8-T0-361-G
A11R25	0757-0948	0		RESISTOR 10K 2% .125W F TC=0+-100	24546	C4-1/8-T0-1002-G
A11R26	0757-0948	0		RESISTOR 10K 2% .125W F TC=0+-100	24546	C4-1/8-T0-1002-G
A11R27	0757-0954	8		RESISTOR 18K 2% .125W F TC=0+-100	24546	C4-1/8-T0-1802-G
A11R28	0757-0954	8		RESISTOR 18K 2% .125W F TC=0+-100	24546	C4-1/8-T0-1802-G
A11R29	0757-0924	2		RESISTOR 1K 2% .125W F TC=0+-100	24546	C4-1/8-T0-1001-G
A11R30	0757-0924	2		RESISTOR 1K 2% .125W F TC=0+-100	24546	C4-1/8-T0-1001-G
A11R31	0757-0924	2		RESISTOR 1K 2% .125W F TC=0+-100	24546	C4-1/8-T0-1001-G
A11R32	0811-1668	9	2	RESISTOR 1.5 5% 2W PW TC=0+-400	75042	BWH2-1R5-J
A11R33	0757-0924	2		RESISTOR 1K 2% .125W F TC=0+-100	24546	C4-1/8-T0-1001-G
A11R34	0811-1668	9		RESISTOR 1.5 5% 2W PW TC=0+-400	75042	BWH2-1R5-J

See introduction to this section for ordering information
*Indicates factory selected value

Table 6-2. Replaceable Parts (Continued)

Reference Designation	HP Part Number	C D	Qty	Description	Mfr Code	Mfr Part Number
A12				FOR CALL-OUTS OF COMP., SEE PAGE 6-20.		
A13	05065-6020	5	1	MODULE ASSEMBLY, BUFFER AMPLIFIER	28480	05065-6020
A13C1	0160-3036	8		CAPACITOR-FDTHRU 5000PF +80 -20% 200V	28480	0160-3036
A13C2	0160-3036	8		CAPACITOR-FDTHRU 5000PF +80 -20% 200V	28480	0160-3036
A13J1	1250-0901	2		CONNECTOR-RF SMB M SGL-HOLE-FR 50-OHM	28480	1250-0901
A13J2	1250-0901	2		CONNECTOR-RF SMB M SGL-HOLE-FR 50-OHM	28480	1250-0901
A13J3	1250-0901	2		CONNECTOR-RF SMB M SGL-HOLE-FR 50-OHM	28480	1250-0901
A13J4	1250-0901	2		CONNECTOR-RF SMB M SGL-HOLE-FR 50-OHM	28480	1250-0901
				A13 MISCELLANEOUS PARTS		
	5060-2059	6	1	PLATE, END	28480	5060-2059
	05065-0001	9	1	CHASSIS, BUFFER AMPLIFIER	28480	05065-0001
	05065-0002	1	1	COVER, BUFFER AMPLIFIER	28480	05065-0002
A13A1	05065-6021	7	1	BOARD ASSEMBLY, BUFFER AMPLIFIER (NOT FOR REPLACEMENT) FOR REPLACEMENT ORDER 05065-6020	28480	05065-6021
A13A1C1	0150-0093	0		CAPACITOR-FXD .01UF +80-20% 100VDC CER	28480	0150-0093
A13A1C2	0150-0093	0		CAPACITOR-FXD .01UF +80-20% 100VDC CER	28480	0150-0093
A13A1C3	0150-0093	0		CAPACITOR-FXD .01UF +80-20% 100VDC CER	28480	0150-0093
A13A1C4	0150-0093	0		CAPACITOR-FXD .01UF +80-20% 100VDC CER	28480	0150-0093
A13A1C5	0150-0093	0		CAPACITOR-FXD .01UF +80-20% 100VDC CER	28480	0150-0093
A13A1C6	0150-0093	0		CAPACITOR-FXD .01UF +80-20% 100VDC CER	28480	0150-0093
A13A1C7*	0160-0198	7	1	CAPACITOR-FXD 4UF +-20% 1KVDC PPR	53021	7110-4
A13A1C8*	0160-2204	0	1	CAPACITOR-FXD 100PF +-5% 300VDC MICA	28480	0160-2204
A13A1C9	0150-0093	0		CAPACITOR-FXD .01UF +80-20% 100VDC CER	28480	0150-0093
A13A1C10	0150-0093	0		CAPACITOR-FXD .01UF +80-20% 100VDC CER	28480	0150-0093
A13A1C11	0150-0121	5		CAPACITOR-FXD .1UF +80-20% 50VDC CER	28480	0150-0121
A13A1C12	0150-0093	0		CAPACITOR-FXD .01UF +80-20% 100VDC CER	28480	0150-0093
A13A1CR1	1902-3149	9		DIODE-ZNR 9.09V 5% DO-7 PD=.4W TC=+.057%	28480	1902-3149
A13A1CR2	1901-0040	1		DIODE-SWITCHING 30V 50MA 2NS DO-35	28480	1901-0040
A13A1L1	9140-0137	1		COIL-MLD 1MH 5% Q=60 .190Dx.44LG-NOM	28480	9140-0137
A13A1Q1	1854-0092	2		TRANSISTOR NPN SI PD=200MW FT=600MHZ	28480	1854-0092
A13A1Q2	1854-0092	2		TRANSISTOR NPN SI PD=200MW FT=600MHZ	28480	1854-0092
A13A1Q3	1854-0092	2		TRANSISTOR NPN SI PD=200MW FT=600MHZ	28480	1854-0092
A13A1R1	0757-0893	4		RESISTOR 51 2% .125W F TC=0+-100	24546	C4-1/8-T0-51R0-G
A13A1R2*	0757-0913	9	5	RESISTOR 360 2% .125W F TC=0+-100	24546	C4-1/8-T0-361-G
A13A1R3	0757-0936	6		RESISTOR 3.3K 2% .125W F TC=0+-100	24546	C4-1/8-T0-3301-G
A13A1R4	0757-0893	4		RESISTOR 51 2% .125W F TC=0+-100	24546	C4-1/8-T0-51R0-G
A13A1R5	0757-0917	3		RESISTOR 510 2% .125W F TC=0+-100	24546	C4-1/8-T0-511-G
A13A1R6	0757-0907	1		RESISTOR 200 2% .125W F TC=0+-100	24546	C4-1/8-T0-201-G
A13A1R7	0757-0924	2		RESISTOR 1K 2% .125W F TC=0+-100	24546	C4-1/8-T0-1001-G
A13A1R8	0757-0385	9	1	RESISTOR 22.1 1% .125W F TC=0+-100	19701	MF4C1/8-T0-22R1-F
A13A1R9	0757-0917	3		RESISTOR 510 2% .125W F TC=0+-100	24546	C4-1/8-T0-511-G
A13A1R10	0757-0917	3		RESISTOR 510 2% .125W F TC=0+-100	24546	C4-1/8-T0-511-G
A13A1R11	0757-0923	1	2	RESISTOR 910 2% .125W F TC=0+-100	24546	C4-1/8-T0-911-G
A13A1R12	0757-0923	1		RESISTOR 910 2% .125W F TC=0+-100	24546	C4-1/8-T0-911-G
A13A1R13	0757-0898	9	2	RESISTOR 82 2% .125W F TC=0+-100	24546	C4-1/8-T0-82R0-G
A13A1R14	0757-0898	9		RESISTOR 82 2% .125W F TC=0+-100	24546	C4-1/8-T0-82R0-G
A13A1R15	0757-0893	4		RESISTOR 51 2% .125W F TC=0+-100	24546	C4-1/8-T0-51R0-G
A13A1R16	0757-0917	3		RESISTOR 510 2% .125W F TC=0+-100	24546	C4-1/8-T0-511-G
A13A1R17	0757-0938	8		RESISTOR 3.9K 2% .125W F TC=0+-100	24546	C4-1/8-T0-3901-G
A13A1R18	0757-0938	8		RESISTOR 3.9K 2% .125W F TC=0+-100	24546	C4-1/8-T0-3901-G
A13A1T1	00105-8007	8	2	TRANSFORMER, POWER AMPLIFIER	28480	00105-8007
A13A1T2	00105-8007	8		TRANSFORMER, POWER AMPLIFIER	28480	00105-8007
A14	05065-6012	8	1	BOARD ASSEMBLY, LOGIC	28480	05065-6012
A14C1	0180-0117	2		CAPACITOR-FXD 2.7UF+-10% 35VDC TA	56289	150D275X903582
A14C2	0150-0121	5		CAPACITOR-FXD .1UF +80-20% 50VDC CER	28480	0150-0121
A14C3	0180-0117	2		CAPACITOR-FXD 2.7UF+-10% 35VDC TA	56289	150D275X903582
A14C4	0180-0106	9		CAPACITOR-FXD 60UF+-20% 6VDC TA	56289	150D606X000682
A14C5	0180-0106	9		CAPACITOR-FXD 60UF+-20% 6VDC TA	56289	150D606X000682
A14CR1	1901-0040	1		DIODE-SWITCHING 30V 50MA 2NS DO-35	28480	1901-0040
A14CR2	1901-0040	1		DIODE-SWITCHING 30V 50MA 2NS DO-35	28480	1901-0040
A14CR3	1901-0040	1		DIODE-SWITCHING 30V 50MA 2NS DO-35	28480	1901-0040
A14CR4	1901-0040	1		DIODE-SWITCHING 30V 50MA 2NS DO-35	28480	1901-0040
A14CR5	1901-0040	1		DIODE-SWITCHING 30V 50MA 2NS DO-35	28480	1901-0040
A14CR6	1902-0034	5	1	DIODE-ZNR 5.76V 10% DO-7 PD=.4W	28480	1902-0034
A14CR7	1902-0041	4	1	DIODE-ZNR 5.11V 5% DO-7 PD=.4W TC=-.009%	28480	1902-0041
A14CR8	1901-0040	1		DIODE-SWITCHING 30V 50MA 2NS DO-35	28480	1901-0040
A14CR9	1901-0040	1		DIODE-SWITCHING 30V 50MA 2NS DO-35	28480	1901-0040
A14CR10	1901-0040	1		DIODE-SWITCHING 30V 50MA 2NS DO-35	28480	1901-0040

See introduction to this section for ordering information
*Indicates factory selected value

Table 6-2. Replaceable Parts (Continued)

Reference Designation	HP Part Number	C D	Qty	Description	Mfr Code	Mfr Part Number
A14CR11	1901-0040	1		DIODE-SWITCHING 30V 50MA 2NS DO-35	28480	1901-0040
A14CR12	1901-0040	1		DIODE-SWITCHING 30V 50MA 2NS DO-35	28480	1901-0040
A14CR13	1884-0003	8	1	THYRISTOR-SCR 3N58 TO-72 VRRM=40	03508	3N58
A14CR14	1902-3024	9	1	DIODE-ZNR 2.87V 5% DO-7 PD=.4W TC=-.07%	28480	1902-3024
A14Q1				NOT ASSIGNED		
A14Q2	1854-0023	9		TRANSISTOR NPN SI TO-18 PD=360MW	28480	1854-0023
A14Q3	1854-0023	9		TRANSISTOR NPN SI TO-18 PD=360MW	28480	1854-0023
A14Q4	1854-0003	5		TRANSISTOR NPN SI TO-39 PD=800MW	28480	1854-0003
A14Q5	1854-0003	5		TRANSISTOR NPN SI TO-39 PD=800MW	28480	1854-0003
A14Q6	1853-0001	1	3	TRANSISTOR PNP SI TO-39 PD=600MW	28480	1853-0001
A14Q7	1854-0023	9		TRANSISTOR NPN SI TO-18 PD=360MW	28480	1854-0023
A14Q8	1854-0003	5		TRANSISTOR NPN SI TO-39 PD=800MW	28480	1854-0003
A14Q9	1854-0003	5		TRANSISTOR NPN SI TO-39 PD=800MW	28480	1854-0003
A14Q10	1853-0001	1		TRANSISTOR PNP SI TO-39 PD=600MW	28480	1853-0001
A14Q11	1854-0003	5		TRANSISTOR NPN SI TO-39 PD=800MW	28480	1854-0003
A14Q12	1854-0003	5		TRANSISTOR NPN SI TO-39 PD=800MW	28480	1854-0003
A14Q13	1854-0003	5		TRANSISTOR NPN SI TO-39 PD=800MW	28480	1854-0003
A14Q14	1854-0003	5		TRANSISTOR NPN SI TO-39 PD=800MW	28480	1854-0003
A14Q15	1854-0003	5		TRANSISTOR NPN SI TO-39 PD=800MW	28480	1854-0003
A14Q16	1854-0003	5		TRANSISTOR NPN SI TO-39 PD=800MW	28480	1854-0003
A14Q17	1854-0003	5		TRANSISTOR NPN SI TO-39 PD=800MW	28480	1854-0003
A14Q18	1854-0003	5		TRANSISTOR NPN SI TO-39 PD=800MW	28480	1854-0003
A14R1				NOT ASSIGNED		
A14R2	0757-0959	3		RESISTOR 30K 2% .125W F TC=0+-100	24546	C4-1/8-T0-3002-G
A14R3	0757-0972	0		RESISTOR 100K 2% .125W F TC=0+-100	24546	C4-1/8-T0-1002-G
A14R4	0757-0948	0		RESISTOR 10K 2% .125W F TC=0+-100	24546	C4-1/8-T0-1002-G
A14R5				NOT ASSIGNED		
A14R6	0757-0948	0		RESISTOR 10K 2% .125W F TC=0+-100	24546	C4-1/8-T0-1002-G
A14R7	0757-0957	1		RESISTOR 24K 2% .125W F TC=0+-100	24546	C4-1/8-T0-2402-G
A14R8	2100-1775	4		RESISTOR-TRMR 5K 5% WW TOP-ADJ 1-TRN	28480	2100-1775
A14R9	0757-0963	9		RESISTOR 43K 2% .125W F TC=0+-100	24546	C4-1/8-T0-4302-G
A14R10	0757-0916	2		RESISTOR 470 2% .125W F TC=0+-100	24546	C4-1/8-T0-471-G
A14R11	0757-0955	9		RESISTOR 20K 2% .125W F TC=0+-100	24546	C4-1/8-T0-2002-G
A14R12	0757-0955	9		RESISTOR 20K 2% .125W F TC=0+-100	24546	C4-1/8-T0-2002-G
A14R13	0757-0957	1		RESISTOR 24K 2% .125W F TC=0+-100	24546	C4-1/8-T0-2402-G
A14R14	0757-0957	1		RESISTOR 24K 2% .125W F TC=0+-100	24546	C4-1/8-T0-2402-G
A14R15				NOT ASSIGNED		
A14R16	0757-0972	0		RESISTOR 100K 2% .125W F TC=0+-100	24546	C4-1/8-T0-1002-G
A14R17	0757-0955	9		RESISTOR 20K 2% .125W F TC=0+-100	24546	C4-1/8-T0-2002-G
A14R18	0757-0957	1		RESISTOR 24K 2% .125W F TC=0+-100	24546	C4-1/8-T0-2402-G
A14R19	0757-0955	9		RESISTOR 20K 2% .125W F TC=0+-100	24546	C4-1/8-T0-2002-G
A14R20	0757-0933	3		RESISTOR 2.4K 2% .125W F TC=0+-100	24546	C4-1/8-T0-2401-G
A14R21	0757-0957	1		RESISTOR 24K 2% .125W F TC=0+-100	24546	C4-1/8-T0-2402-G
A14R22	0757-0957	1		RESISTOR 24K 2% .125W F TC=0+-100	24546	C4-1/8-T0-2402-G
A14R23	0757-0955	9		RESISTOR 20K 2% .125W F TC=0+-100	24546	C4-1/8-T0-2002-G
A14R24	0757-0957	1		RESISTOR 24K 2% .125W F TC=0+-100	24546	C4-1/8-T0-2402-G
A14R25	0757-0948	0		RESISTOR 10K 2% .125W F TC=0+-100	24546	C4-1/8-T0-1002-G
A14R26	0757-0960	6		RESISTOR 33K 2% .125W F TC=0+-100	24546	C4-1/8-T0-3302-G
A14R27	0757-0955	9		RESISTOR 20K 2% .125W F TC=0+-100	24546	C4-1/8-T0-2002-G
A14R28	0757-0960	6		RESISTOR 33K 2% .125W F TC=0+-100	24546	C4-1/8-T0-3302-G
A14R29	0757-0941	3		RESISTOR 5.1K 2% .125W F TC=0+-100	24546	C4-1/8-T0-5101-G
A14R30	0757-0968	4	1	RESISTOR 68K 2% .125W F TC=0+-100	24546	C4-1/8-T0-6802-G
A14R31	0757-0948	0		RESISTOR 10K 2% .125W F TC=0+-100	24546	C4-1/8-T0-1002-G
A14R32	0757-0952	6		RESISTOR 15K 2% .125W F TC=0+-100	24546	C4-1/8-T0-1502-G
A14R33	0757-0957	1		RESISTOR 24K 2% .125W F TC=0+-100	24546	C4-1/8-T0-2402-G
A14R34	0757-0945	7		RESISTOR 7.5K 2% .125W F TC=0+-100	24546	C4-1/8-T0-7501-G
A14R35	0757-0924	2		RESISTOR 1K 2% .125W F TC=0+-100	24546	C4-1/8-T0-1001-G
A14R36	0757-0955	9		RESISTOR 20K 2% .125W F TC=0+-100	24546	C4-1/8-T0-2002-G
A14R37	0757-0975	3	1	RESISTOR 130K 2% .125W F TC=0+-100	24546	C4-1/8-T0-1302-G
A15	05065-6023	1	1	BOARD ASSEMBLY, VOLTAGE REGULATOR (SERIES 1840)	28480	05065-6023
A15C1	0150-0052	1	1	CAPACITOR-FXD .05UF +-20% 400VDC CER	28480	0150-0052
A15C2	0180-0117	2		CAPACITOR-FXD 2.7UF+-10% 35VDC TA	56289	150D275X903582
A15C3	0140-0196	3		CAPACITOR-FXD 150PF +-5% 300VDC MICA	72136	DM15F151J0300WV1CR
A15C4	0180-0117	2		CAPACITOR-FXD 2.7UF+-10% 35VDC TA	56289	150D275X903582
A15C5	0180-0117	2		CAPACITOR-FXD 2.7UF+-10% 35VDC TA	56289	150D275X903582
A15C6	0180-0097	7		CAPACITOR-FXD 47UF+-10% 35VDC TA	56289	150D476X903582
A15C7	0160-0127	2		CAPACITOR-FXD 1UF +-20% 25VDC CER	28480	0160-0127
A15C8	0180-0113	8		CAPACITOR-FXD 100UF+20-15% 30VDC TA	06001	69F355G7
A15C9	0180-0113	8		CAPACITOR-FXD 100UF+20-15% 30VDC TA	06001	69F355G7
A15C10	0180-0113	8		CAPACITOR-FXD 100UF+20-15% 30VDC TA	06001	69F355G7
A15C11	0180-1704	5	1	CAPACITOR-FXD 47UF+-10% 6VDC TA	56289	150D476X900682

See introduction to this section for ordering information
*Indicates factory selected value

Table 6-2. Replaceable Parts (Continued)

Reference Designation	HP Part Number	C D	Qty	Description	Mfr Code	Mfr Part Number
A15CR1	1901-0200	5	6	DIODE-PWR RECT 100V 1.5A	28480	1901-0200
A15CR2	1901-0200	5		DIODE-PWR RECT 100V 1.5A	28480	1901-0200
A15CR3	1901-0200	5		DIODE-PWR RECT 100V 1.5A	28480	1901-0200
A15CR4	1901-0200	5		DIODE-PWR RECT 100V 1.5A	28480	1901-0200
A15CR5	1902-0787	5	1	DIODE-ZNR 1N938 9V 5% DO-7 PD=.5W	28480	1902-0787
A15CR6	1901-0033	2		DIODE-GEN PRP 180V 200MA DO-7	28480	1901-0033
A15CR7	1901-0033	2		DIODE-GEN PRP 180V 200MA DO-7	28480	1901-0033
A15CR8	1901-0025	2		DIODE-GEN PRP 100V 200MA DO-7	28480	1901-0025
A15CR9A				PART OF A15CR9A		
A15CR9A	1902-0247	2	1	DIODE-ZNR 20V 1% DO-7 PD=.4W TC=+.005%	28480	1902-0247
A15L1	9140-0137	1		COIL-MLD 1MH 5% Q=60 .19DX.44LG-NOM	28480	9140-0137
A15L2	9140-0179	1	1	COIL-MLD 22UH 10% Q=75 .155DX.375LG-NOM	28480	9140-0179
A15Q1	1854-0039	7		TRANSISTOR NPN 2N3053S SI TO-39 PD=1W	01928	2N3053S
A15Q2	1854-0003	5		TRANSISTOR NPN SI TO-39 PD=800MW	28480	1854-0003
A15Q3	1853-0001	1		TRANSISTOR PNP SI TO-39 PD=600MW	28480	1853-0001
A15Q4	1855-0081	1	1	TRANSISTOR J-FET N-CHAN D-MODE SI	01295	2N5245
A15Q5A	1854-0221	9	2	TRANSISTOR-DUAL NPN PD=750MW	28480	1854-0221
A15Q5B				PART OF A15Q5A		
A15Q6A	1854-0221	9		TRANSISTOR-DUAL NPN PD=750MW	28480	1854-0221
A15Q6B				PART OF A15Q6A		
A15Q7	1853-0006	6	1	TRANSISTOR PNP 2N3134 SI TO-5 PD=600MW	04713	2N3134
A15Q8	1854-0039	7		TRANSISTOR NPN 2N3053S SI TO-39 PD=1W	01928	2N3053S
A15Q9	1854-0039	7		TRANSISTOR NPN 2N3053S SI TO-39 PD=1W	01928	2N3053S
A15Q10	1853-0024	8	1	TRANSISTOR PNP 2N4234 SI TO-5 PD=1W	04713	2N4234
A15R1	0757-0926	4		RESISTOR 1.2K 2% .125W F TC=0+-100	24546	C4-1/8-T0-1201-G
A15R2	0811-1661	2	1	RESISTOR .39 5% 2W PW TC=0+-800	75042	BWH2-39/100-J
A15R3	0757-0966	2		RESISTOR 56K 2% .125W F TC=0+-100	24546	C4-1/8-T0-5602-G
A15R4	0811-2593	1	1	RESISTOR 9K 1% .125W PWW TC=0+-10	20940	135-1/8-D-9001-F
A15R5	0757-0973	1	1	RESISTOR 110K 2% .125W F TC=0+-100	24546	C4-1/8-T0-1102-G
A15R6	0811-2592	0	1	RESISTOR 11K 1% .125W PWW TC=0+-10	28480	0811-2592
A15R7	0811-2591	9	1	RESISTOR 925 1% .125W PWW TC=0+-10	20940	135-1/8-D-925R-F
A15R8	0811-2590	8	1	RESISTOR 1,333K 1% .125W PWW TC=0+-5	20940	135-1/8-C-1333R-F
A15R9	0757-0956	0	1	RESISTOR 22K 2% .125W F TC=0+-100	24546	C4-1/8-T0-2202-G
A15R10*						
A15R11	0811-2588	4	1	RESISTOR 725 .1% .125W PWW TC=0+-2.5	20940	135-1/8-A-725R-B
A15R12	0811-2589	5	1	RESISTOR 333 1% .125W PWW TC=0+-5	20940	135-1/8-C-333R-F
A15R13	0757-0948	0		RESISTOR 10K 2% .125W F TC=0+-100	24546	C4-1/8-T0-1002-G
A15R14	0757-0346	2	2	RESISTOR 10 1% .125W F TC=0+-100	24546	C4-1/8-T0-10R0-F
A15R15	0757-0346	2		RESISTOR 10 1% .125W F TC=0+-100	24546	C4-1/8-T0-10R0-F
A15R16	0757-0900	4		RESISTOR 100 2% .125W F TC=0+-100	24546	C4-1/8-T0-101-G
A15R17	2100-1774	3	1	RESISTOR-TRMR 2K 5% WW TOP-ADJ 1-TRN	28480	2100-1774
A15T1	9100-2478	3	1	TRANSFORMER XFMR,1KHZ,10VCT-12VCT	28480	9100-2478
A16				FOR CALL-OUTS OF COMP., SEE TABLE 6-4.		
A17	05065-6014	2	1	BOARD ASSEMBLY, TERMINAL	28480	05065-6014
A17R1	0757-0485	0	2	RESISTOR 681K 1% .125W F TC=0+-100	28480	0757-0485
A17R2	0757-0482	7	1	RESISTOR 511K 1% .125W F TC=0+-100	28480	0757-0482
A17R3	0757-0952	6		RESISTOR 15K 2% .125W F TC=0+-100	24546	C4-1/8-T0-1502-G
A17R4	0757-0485	0		RESISTOR 681K 1% .125W F TC=0+-100	28480	0757-0485
A17R5	0757-0475	8	1	RESISTOR 274K 1% .125W F TC=0+-100	24546	C4-1/8-T0-2743-F
A17R6	0698-3453	2	1	RESISTOR 196K 1% .125W F TC=0+-100	24546	C4-1/8-T0-1963-F
A17R7	0757-0965	1		RESISTOR 51K 2% .125W F TC=0+-100	24546	C4-1/8-T0-5102-G
A17R8	0757-0972	0		RESISTOR 100K 2% .125W F TC=0+-100	24546	C4-1/8-T0-1002-G
A17R9	0757-0955	9		RESISTOR 20K 2% .125W F TC=0+-100	24546	C4-1/8-T0-2002-G
A17R10	0757-0470	3	1	RESISTOR 162K 1% .125W F TC=0+-100	24546	C4-1/8-T0-1623-F
A17R11	0757-0962	8		RESISTOR 39K 2% .125W F TC=0+-100	24546	C4-1/8-T0-3902-G
A17R12	0757-0960	6		RESISTOR 33K 2% .125W F TC=0+-100	24546	C4-1/8-T0-3302-G
A18	05065-6057	2	1	JUMPER BOARD ASSEMBLY	28480	05065-6057
A18CR1	1901-0200	5		DIODE-PWR RECT 100V 1.5A	28480	1901-0200
A18CR2	1901-0200	5		DIODE-PWR RECT 100V 1.5A	28480	1901-0200
				A18 MISCELLANEOUS PARTS		
	05065-6066	1	1	KIT, ACCESSORY	28480	05065-6066
	1250-0813	5	1	ADAPTER-COAX STR M-BMB M-BMB	28480	1250-0813
	1251-0126	5	1	CONNECTOR 5-PIN F CIRC STANDARD	28480	1251-0126
	8710-0033	4	1	ALIGNMENT TOOL	28480	8710-0033
	05060-6116	3	1	CABLE ASSEMBLY, TEST	28480	05060-6116
	05061-6073	2	1	BOARD ASSEMBLY, EXTENDER	28480	05061-6073
	05065-6064	7	1	BOARD ASSEMBLY, EXTENDER 15-PIN	28480	05065-6064
	05065-6065	9	1	BOARD ASSEMBLY, EXTENDER 15-PIN	28480	05065-6065

See introduction to this section for ordering information
*Indicates factory selected value

Table 6-2. Replaceable Parts (Continued)

Reference Designation	HP Part Number	C D	Qty	Description	Mfr Code	Mfr Part Number
				CHASSIS PARTS		
C1	0180-0204	8	2	CAPACITOR-FXD 2800UF+100-10% 40VDC AL	28480	0180-0204
C2	0180-0204	8		CAPACITOR-FXD 2800UF+100-10% 40VDC AL	28480	0180-0204
C3				NOT ASSIGNED		
C4	0180-0056	8	1	CAPACITOR-FXD 1000UF+100-10% 50VDC AL	28480	0180-0056
C5A	0160-3611	5	1	CAPACITOR-FXD 7200PF/7200PF +-10%	28480	0160-3611
C5B			1	PART OF C5A		
C6	0160-2218	6	1	CAPACITOR-FXD 1000PF +-5% 300VDC MICA	28480	0160-2218
	1520-0001	6	1	PLATE-MOUNTING FOR TWIST LOCK TYPE CAP	28480	1520-0001
C7	0170-0064	7	1	CAPACITOR-FXD .47UF +-10% 100VDC POLYE	84411	663UW47491W
CR1	1901-0040	1	2	DIODE-SWITCHING 30V 50MA 2NS DO-35	28480	1901-0040
CR2	1901-0040	1		DIODE-SWITCHING 30V 50MA 2NS DO-35	28480	1901-0040
CR3	1901-0327	7	1	DIODE-PWR RECT 200V 1A 6US	03508	A14B
DS1	2140-0025	9	2	LAMP-INCAND 327 28VDC 40MA T-1-3/4-BULB	28480	2140-0025
	1450-0705	8	1	LAMPHOLDER GRN-TP .332-DIA MINTR-FLG-SKT	28480	1450-0705
DS2	2140-0025	9		LAMP-INCAND 327 28VDC 40MA T-1-3/4-BULB	28480	2140-0025
	1450-0114	3	1	LAMPHOLDER AMB-TP .332-DIA	28480	1450-0114
F1	2110-0564	8	2	FUSEHOLDER BODY 12A MAX FOR UL	H9027	031.1657
	2110-0569	3	2		28480	2110-0569
	00310-48801	0	2	SHOULDER WASHER FOR FUSEHOLDERS	28480	00310-48801
F2	2110-0564	8		FUSEHOLDER BODY 12A MAX FOR UL	H9027	031.1657
	2110-0565	9		FUSEHOLDER CAP 12A MAX FOR UL	28480	2110-0565
	2110-0565	9	2	FUSEHOLDER CAP 12A MAX FOR UL	28480	2110-0565
	2110-0569	3			28480	2110-0569
	00310-48801	0		SHOULDER WASHER FOR FUSEHOLDERS	28480	00310-48801
J1	1250-0140	1	5	CONNECTOR-RF BNC FEM SGL-HOLE-RR 50-OHM	28480	1250-0140
J2	1250-0140	1		CONNECTOR-RF BNC FEM SGL-HOLE-RR 50-OHM	28480	1250-0140
J3	1250-0140	1		CONNECTOR-RF BNC FEM SGL-HOLE-RR 50-OHM	28480	1250-0140
J4	1250-0140	1		CONNECTOR-RF BNC FEM SGL-HOLE-RR 50-OHM	28480	1250-0140
J5	1250-0140	1		CONNECTOR-RF BNC FEM SGL-HOLE-RR 50-OHM	28480	1250-0140
J6				NOT ASSIGNED		
J7				NOT ASSIGNED		
J8	1251-2458	0	1	CONNECTOR 3-PIN M CIRC STANDARD	28480	1251-2458
J9	1251-0111	8	1	CONNECTOR 5-PIN M CIRC STANDARD	28480	1251-0111
J10	1250-0102	5	4	CONNECTOR-RF BNC FEM SGL-HOLE-FR 50-OHM	28480	1250-0102
J11	1250-0102	5		CONNECTOR-RF BNC FEM SGL-HOLE-FR 50-OHM	28480	1250-0102
J12	1250-0102	5		CONNECTOR-RF BNC FEM SGL-HOLE-FR 50-OHM	28480	1250-0102
J13				PART OF OPTION 001		
J14	1250-0102	5		CONNECTOR-RF BNC FEM SGL-HOLE-FR 50-OHM	28480	1250-0102
L1	9100-0337	9	1	TRANSFORMER-AUDIO 1 V; 120 CPS; 50 MH	28480	9100-0337
M1	1120-1472	9	1	METER 1.75-IN; 100 UA FSD; PVT & JEWEL	28480	1120-1472
Q1	1854-0020	6	1	TRANSISTOR NPN SI TO-8 PD=25W	28480	1854-0020
Q2	1854-0300	5	3	TRANSISTOR NPN SI PD=25W FT=4MHZ	28480	1854-0300
Q3	1854-0300	5		TRANSISTOR NPN SI PD=25W FT=4MHZ	28480	1854-0300
Q4	1854-0300	5		TRANSISTOR NPN SI PD=25W FT=4MHZ	28480	1854-0300
R1*						
R2	0757-0952	6	1	RESISTOR 15K 2% .125W F TC=0+-100	24546	C4-1/8-T0-1502-G
R3	2100-2425	3	1	RESISTOR-VAR PREC WW 5-TRN 20K 3%	28480	2100-2425
	1140-0014	5	1	TURNS DIAL 15 TURNS (MOD. 2606)	28480	1140-0014
R4	0757-0948	0	1	RESISTOR 10K 2% .125W F TC=0+-100	24546	C4-1/8-T0-1002-G
R5	0757-0972	0	1	RESISTOR 100K 2% .125W F TC=0+-100	24546	C4-1/8-T0-1002-G
R6	2100-2575	4	1	RESISTOR-VAR PREC WW 10-TRN 1K 5%	28480	2100-2575
R7	0757-0959	3	1	RESISTOR 30K 2% .125W F TC=0+-100	24546	C4-1/8-T0-3002-G
S1	3101-1234	3	1	SWITCH-SL DPDT STD 1.5A 250VAC SLDR-LUG	28480	3101-1234
S2	3101-1155	7	1	SWITCH-TGL SUBMIN SPDT 5A 115VAC	28480	3101-1155
S3	3101-0052	1	1	SWITCH-PB SPST-NO MOM .25A 30VAC BLK-BTN	82389	961
S4	3100-0893	6	1	SWITCH-ROTARY 0.812 STRUT CTR SPCG; 12	28480	3100-0893
	0370-0077	6	1	KNOB SMRTD BAR;BLK;FOR .250SHFT1.625D	28480	0370-0077
S5	3100-2910	2	1	SWITCH-ROTARY 0.812 STRUT CTR SPCG; 2	28480	3100-2910
T1	9100-2742	4	1	TRANSFORMER-POWER 115/230V 50-1000HZ	28480	9100-2742
W1	05065-6032	0	1	CABLE ASSEMBLY, A3 TO A1	28480	05065-6032
	1250-0921	6	12	CONNECTOR-RF SMB FEM UNMTD 50-OHM	28480	1250-0921
	8120-0229	9	19	CABLE-COAX 50-OHM 29PF/FT	28480	8120-0229
W2	05065-6033	2	1	CABLE ASSEMBLY, A3 TO A10	28480	05065-6033
	1250-0921	6		CONNECTOR-RF SMB FEM UNMTD 50-OHM	28480	1250-0921
	8120-0229	9		CABLE-COAX 50-OHM 29PF/FT	28480	8120-0229
W3	05065-6034	4	1	CABLE ASSEMBLY, A3 TO A13	28480	05065-6034
	1250-0921	6		CONNECTOR-RF SMB FEM UNMTD 50-OHM	28480	1250-0921
	8120-0229	9		CABLE-COAX 50-OHM 29PF/FT	28480	8120-0229
W4	05065-6075	0	1	CABLE ASSEMBLY, A3 TO A3	28480	05065-6075
	1250-0921	6		CONNECTOR-RF SMB FEM UNMTD 50-OHM	28480	1250-0921
	8120-0229	9		CABLE-COAX 50-OHM 29PF/FT	28480	8120-0229

See introduction to this section for ordering information
*Indicates factory selected value

Table 6-2. Replaceable Parts (Continued)

Reference Designation	HP Part Number	C D	Qty	Description	Mfr Code	Mfr Part Number
W5	05065-6036	8	1	CABLE ASSEMBLY, A13 TO A1	28480	05065-6036
	1250-0921	6		CONNECTOR-RF SMB FEM UNMTD 50-OHM	28480	1250-0921
	8120-0229	9		CABLE-COAX 50-OHM 29PF/FT	28480	8120-0229
W6	05065-6037	0	1	CABLE ASSEMBLY, REAR PANEL TO A13	28480	05065-6037
	1250-0050	2	8	NUT-RF CONNECTOR BNC1.562 LI.062ID	02660	31-2125-2
	1250-0051	3	7	CONTACT-RF CONN SERIES BNC: FEMALE	02660	31-2109
	8120-0229	9		CABLE-COAX 50-OHM 29PF/FT	28480	8120-0229
W7	05065-6038	2	1	CABLE ASSEMBLY, REAR PANEL TO A6	28480	05065-6038
	1250-0050	2		NUT-RF CONNECTOR BNC1.562 LI.062ID	02660	31-2125-2
	1250-0051	3		CONTACT-RF CONN SERIES BNC: FEMALE	02660	31-2109
	8120-0229	9		CABLE-COAX 50-OHM 29PF/FT	28480	8120-0229
W8				NOT ASSIGNED		
W9	05065-6039	4	1	CABLE ASSEMBLY, REAR PANEL TO A4	28480	05065-6039
	1250-0050	2		NUT-RF CONNECTOR BNC1.562 LI.062ID	02660	31-2125-2
	1250-0051	3		CONTACT-RF CONN SERIES BNC: FEMALE	02660	31-2109
	8120-0229	9		CABLE-COAX 50-OHM 29PF/FT	28480	8120-0229
W10	05065-6040	7	1	CABLE ASSEMBLY, FRONT PANEL TO A4	28480	05065-6040
	1250-0050	2		NUT-RF CONNECTOR BNC1.562 LI.062ID	02660	31-2125-2
	1250-0051	3		CONTACT-RF CONN SERIES BNC: FEMALE	02660	31-2109
	8120-0229	9		CABLE-COAX 50-OHM 29PF/FT	28480	8120-0229
W11	05065-6041	9	1	CABLE ASSEMBLY, FRONT PANEL TO W11	28480	05065-6041
	1250-0050	2		NUT-RF CONNECTOR BNC1.562 LI.062ID	02660	31-2125-2
	8120-0229	9		CABLE-COAX 50-OHM 29PF/FT	28480	8120-0229
W12	05065-6042	1	1	CABLE ASSEMBLY, A10 TO A6	28480	05065-6042
	1250-0921	6		CONNECTOR-RF SMB FEM UNMTD 50-OHM	28480	1250-0921
	8120-0229	9		CABLE-COAX 50-OHM 29PF/FT	28480	8120-0229
W13	05065-6043	3	1	CABLE ASSEMBLY, A10 TO A9	28480	05065-6043
	1250-0921	6		CONNECTOR-RF SMB FEM UNMTD 50-OHM	28480	1250-0921
	8120-0229	9		CABLE-COAX 50-OHM 29PF/FT	28480	8120-0229
W14	05065-6044	5	1	CABLE ASSEMBLY, A10 TO A10 (+EFC)	28480	05065-6044
	1250-0921	6		CONNECTOR-RF SMB FEM UNMTD 50-OHM	28480	1250-0921
	8120-0229	9		CABLE-COAX 50-OHM 29PF/FT	28480	8120-0229
W15	05065-6045	7	1	CABLE ASSEMBLY, A3 TO A8	28480	05065-6045
	1250-0921	6		CONNECTOR-RF SMB FEM UNMTD 50-OHM	28480	1250-0921
	8120-0229	9		CABLE-COAX 50-OHM 29PF/FT	28480	8120-0229
W16	05065-6046	9	1	CABLE ASSEMBLY, REAR PANEL TO A13	28480	05065-6046
	1250-0050	2		NUT-RF CONNECTOR BNC1.562 LI.062ID	02660	31-2125-2
	1250-0051	3		CONTACT-RF CONN SERIES BNC: FEMALE	02660	31-2109
	1250-0921	6		CONNECTOR-RF SMB FEM UNMTD 50-OHM	28480	1250-0921
	8120-0229	9		CABLE-COAX 50-OHM 29PF/FT	28480	8120-0229
W17	05065-6047	1	1	CABLE ASSEMBLY, FRONT PANEL TO A13	28480	05065-6047
	1250-0050	2		NUT-RF CONNECTOR BNC1.562 LI.062ID	02660	31-2125-2
	1250-0051	3		CONTACT-RF CONN SERIES BNC: FEMALE	02660	31-2109
	1250-0921	6		CONNECTOR-RF SMB FEM UNMTD 50-OHM	28480	1250-0921
	8120-0229	9		CABLE-COAX 50-OHM 29PF/FT	28480	8120-0229
W18	05065-6048	3	1	CABLE ASSEMBLY, A1 TO FRONT PANEL	28480	05065-6048
	1250-0050	2		NUT-RF CONNECTOR BNC1.562 LI.062ID	02660	31-2125-2
	1250-0051	3		CONTACT-RF CONN SERIES BNC: FEMALE	02660	31-2109
	1250-0921	6		CONNECTOR-RF SMB FEM UNMTD 50-OHM	28480	1250-0921
	8120-0229	9		CABLE-COAX 50-OHM 29PF/FT	28480	8120-0229
W19	05065-6049	5	1	CABLE ASSEMBLY, A9 TO 85	28480	05065-6049
	8120-0229	9		CABLE-COAX 50-OHM 29PF/FT	28480	8120-0229
W20				SAME AS W19, USE PREFIX W20		
W21	05065-6050	8	1	CABLE ASSEMBLY, A9 TO 85	28480	05065-6050
	8120-0229	9		CABLE-COAX 50-OHM 29PF/FT	28480	8120-0229
XA1				NOT ASSIGNED		
XA2	1251-0160	7	8	CONNECTOR-PC EDGE 15-CONT/ROW 1-ROW	28480	1251-0160
XA3				NOT ASSIGNED		
XA4	1251-0160	7		CONNECTOR-PC EDGE 15-CONT/ROW 1-ROW	28480	1251-0160
XA5				NOT ASSIGNED		
XA6	1251-0160	7		CONNECTOR-PC EDGE 15-CONT/ROW 1-ROW	28480	1251-0160
XA7				NOT ASSIGNED		
XA8	1251-0160	7		CONNECTOR-PC EDGE 15-CONT/ROW 1-ROW	28480	1251-0160
XA9	1251-0160	7		CONNECTOR-PC EDGE 15-CONT/ROW 1-ROW	28480	1251-0160
XA10				NOT ASSIGNED		
XA11	1251-0160	7		CONNECTOR-PC EDGE 15-CONT/ROW 1-ROW	28480	1251-0160
XA12				NOT ASSIGNED		
XA13				NOT ASSIGNED		
XA14	1251-0160	7		CONNECTOR-PC EDGE 15-CONT/ROW 1-ROW	28480	1251-0160
XA15	1251-0160	7		CONNECTOR-PC EDGE 15-CONT/ROW 1-ROW	28480	1251-0160
				MISCELLANEOUS PARTS		
	1251-0159	4	1	CONNECTOR-PC EDGE 15-CONT/ROW 2-ROWS	28480	1251-0159
	1251-0214	2	1	CONNECTOR 9-PIN F D SERIES	28480	1251-0214
	5020-0176	0	1	INSULATOR FOR SNAP-ON PINS	28480	5020-0176
	5060-0766	8	1	HANDLE ASSY;RETAINER(LIGHT GRAY)	28480	5060-0766
	05061-6091	0	1	CABLE ASSEMBLY, POWER	28480	05061-6091

See introduction to this section for ordering information
*Indicates factory selected value

Table 6-2. Replaceable Parts (Continued)

Reference Designation	HP Part Number	C D	Qty	Description	Mfr Code	Mfr Part Number
	05060-2083	8	1	COVER, FIELD DIAL	28480	05060-2083
	05065-0016	0	1	DECK, R.V.F.R.	28480	05065-0016
	05065-0018	4	1	DECK, MAIN	28480	05065-0018
	05065-0017	2	1	DECK, OSCILLATOR	28480	05065-0017
	05065-0027	3	1	CLAMP, R.V.F.R.	28480	05065-0027
	05065-0041	3	1	PAD, CLAMP	28480	05065-0041
	05065-2018	6	1	DOOR, FRONT	28480	05065-2018
				CABINET PARTS		
1	5060-0732	8	1	SIDE FRAME ASSY	28480	5060-0732
2	05061-2041	1	1	COVER, TOP	28480	05061-2041
3	05065-2048	9	1	COVER, BOTTOM	28480	05065-2048
4	05065-0008	3	1	PANEL, FRONT	28480	05065-0008
5	05065-0009	5	1	PANEL, REAR	28480	05065-0009
6	05065-2017	4	1	PLATE, LEFT PANEL	28480	05065-2017
7	5060-0766	8	2	HANDLE ASSY:RETAINER(LIGHT GRAY)	28480	5060-0766
8	5060-0222	1	1	HANDLE ASSY:SM SIDE	28480	5060-0222
9	5060-0767	9	1	FOOT ASSY:FM	28480	5060-0767
10	5000-0051	8	1	TRIM STRIP	28480	5000-0051
11	5060-0775	9	1	KIT:RACK MOUNT, SM(LIGHT GRAY)	28480	5060-0775
A12	05065-6001	5	1	RUBIDIUM VAPOR FREQUENCY REFERENCE FACTORY REPAIR ONLY. FOR REPLACEMENT ORDER HP PART NO. 05065-6071 REPLACEMENT R.V.F.R. KIT.	28480	05065-6001
	05065-6074	8	1	CABLE ASSEMBLY TO HARMONIC GENERATOR	28480	05065-6074
				CABLE ASSEMBLY, HARMONIC GENERATOR TO MULTI. & SOLAR CELL TO SIGNAL AMPL.		
	05065-6051	0	1	CABLE ASSEMBLY TO DECK	28480	05065-6051
A12C1	0160-2049	1	1	CAPACITOR-FD THRU 5000PF +80 -20% 500V	33095	54-743-009-X5V0-502Z
A12A1	05065-6004	1	1	BOARD ASSEMBLY, LAMP OSCILLATOR PART OF A12A1 LAMP ASSEMBLY	28480	05065-6004
A12A1C1	0150-0093	0	1	CAPACITOR-FXD .01UF +80-20% 100VDC CER	28480	0150-0093
A12A1C2	0140-0194	1	1	CAPACITOR-FXD 110PF +-5% 300VDC MICA	72136	DM15F111J0300WV1CR
A12A1C3	0160-2258	4	1	CAPACITOR-FXD 11PF +-5% 500VDC CER 0+-30	28480	0160-2258
A12A1C4	0160-2247	1	1	CAPACITOR-FXD 3.9PF +-.25PF 500VDC CER	28480	0160-2247
A12A1CR1	1901-0460	9	1	DIODE-STABISTOR 30V 150MA DO-7	28480	1901-0460
A12A1L2	9140-0112	2	2	COIL-MLD 4.7UH 10% Q=33 .155DX.375LG-NOM	28480	9140-0112
A12A1L3	9140-0112	2		COIL-MLD 4.7UH 10% Q=33 .155DX.375LG-NOM	28480	9140-0112
A12A1Q1	1854-0308	3	1	TRANSISTOR NPN 2N3553 SI TO-39 PD=1W	01928	2N3553
A12A1R1	0698-3406	5	1	RESISTOR 1.33K 1% .5W F TC=0+-100	28480	0698-3406
A12A1R2	0757-0931	1	1	RESISTOR 2K 2% .125W F TC=0+-100	24546	C4-1/8-T0-2001-G
A12A1R3	0757-0346	2	1	RESISTOR 10 1% .125W F TC=0+-100	24546	C4-1/8-T0-10R0-F
A12A2	05065-6005	3	1	TUNER ASSEMBLY, CAVITY	28480	05065-6005
	05065-8005	5	1	LAMP AND COIL ASSEMBLY PART OF A12A2 LAMP & COIL ASSEMBLY	28480	05065-8005
	05065-2010	0	1	SUPPORT, LAMP	28480	05065-2010
A12A2DS1	05065-8002	9	1	LAMP	28480	05065-8002
A12A3	05065-6002	7	1	OVEN ASSEMBLY NOT RECOMMENDED FOR FIELD REPAIR	28480	05065-6002

See introduction to this section for ordering information
*Indicates factory selected value

Table 6-3. Option 002 and 003 Replaceable Parts

Reference Designation	HP Part Number	C D	Qty	Description	Mfr Code	Mfr Part Number
				OPTION 002 & 003		
A2	05065-6022	9	1	BOARD ASSEMBLY, CHARGER	28480	05065-6022
A2C1	0150-0052	1	1	CAPACITOR-FXD .05UF +-20% 400VDC CER	28480	0150-0052
A2C2	0180-0049	9	2	CAPACITOR-FXD 20UF+75-10% 50VDC AL	56289	30D206G050CC2
A2C3	0180-0049	9		CAPACITOR-FXD 20UF+75-10% 50VDC AL	56289	30D206G050CC2
A2C4	0180-0097	7	1	CAPACITOR-FXD 47UF+-10% 35VDC TA	56289	150D476X9035B2
A2C5	0150-0121	5	1	CAPACITOR-FXD .1UF +80-20% 50VDC CER	28480	0150-0121
A2CR1	1901-0028	5	5	DIODE-PWR RECT 400V 750MA DO-29	28480	1901-0028
A2CR2	1901-0028	5		DIODE-PWR RECT 400V 750MA DO-29	28480	1901-0028
A2CR3	1901-0028	5		DIODE-PWR RECT 400V 750MA DO-29	28480	1901-0028
A2CR4	1901-0028	5		DIODE-PWR RECT 400V 750MA DO-29	28480	1901-0028
A2CR5	1901-0028	5		DIODE-PWR RECT 400V 750MA DO-29	28480	1901-0028
A2CR6	1902-3070	5	1	DIODE-ZNR 4.22V 5% DO-7 PD=.4W TC=-.038%	28480	1902-3070
A2CR7	1902-3290	1	1	DIODE-ZNR 31.6V 5% DO-7 PD=.4W TC=+.074%	28480	1902-3290
A2CR8	1884-0003	8	1	THYRISTOR-SCR 3N58 TO-72 VRRM=40	03508	3N58
A2CR9	1902-3172	8	1	DIODE-ZNR 11V 2% DO-7 PD=.4W TC=+.062%	28480	1902-3172
A2CR10				DELETED		
A2CR11	1902-3224	1	1	DIODE-ZNR 17.8V 5% DO-7 PD=.4W TC=+.067%	28480	1902-3224
A2CR12				DELETED		
A2CR13	1901-0200	5	1	DIODE-PWR RECT 100V 1.5A	28480	1901-0200
A2CR14				DELETED		
A2CR15	1902-3104	6	1	DIODE-ZNR 5.62V 5% DO-7 PD=.4W TC=+.016%	28480	1902-3104
A2CR16	1902-3203	6	1	DIODE-ZNR 14.7V 5% DO-7 PD=.4W TC=+.057%	28480	1902-3203
A2K1	0490-0475	2	1	RELAY 2C 24VDC-COIL 2A 28VDC	28480	0490-0475
A2Q1	1854-0003	5	12	TRANSISTOR NPN SI TO-39 PD=800MW	28480	1854-0003
A2Q2	1854-0003	5		TRANSISTOR NPN SI TO-39 PD=800MW	28480	1854-0003
A2Q3	1854-0003	5		TRANSISTOR NPN SI TO-39 PD=800MW	28480	1854-0003
A2Q4	1854-0003	5		TRANSISTOR NPN SI TO-39 PD=800MW	28480	1854-0003
A2Q5	1854-0003	5		TRANSISTOR NPN SI TO-39 PD=800MW	28480	1854-0003
A2Q6	1854-0003	5		TRANSISTOR NPN SI TO-39 PD=800MW	28480	1854-0003
A2Q7	1854-0003	5		TRANSISTOR NPN SI TO-39 PD=800MW	28480	1854-0003
A2Q8	1854-0003	5		TRANSISTOR NPN SI TO-39 PD=800MW	28480	1854-0003
A2Q9	1854-0003	5		TRANSISTOR NPN SI TO-39 PD=800MW	28480	1854-0003
A2Q10	1854-0003	5		TRANSISTOR NPN SI TO-39 PD=800MW	28480	1854-0003
A2Q11	1854-0003	5		TRANSISTOR NPN SI TO-39 PD=800MW	28480	1854-0003
A2Q12	1853-0001	1	1	TRANSISTOR PNP SI TO-39 PD=600MW	28480	1853-0001
A2Q13	1853-0024	8	1	TRANSISTOR PNP 2N4234 SI TO-5 PD=1W	04713	2N4234
A2Q14	1854-0020	6	1	TRANSISTOR NPN SI TO-8 PD=25W	28480	1854-0020
A2Q15	1854-0003	5		TRANSISTOR NPN SI TO-39 PD=800MW	28480	1854-0003
A2R1	0757-0930	0	1	RESISTOR 1.8K 2% .125W F TC=0+-100	24546	C4-1/8-T0-1801-G
A2R2	0757-0955	9	3	RESISTOR 20K 2% .125W F TC=0+-100	24546	C4-1/8-T0-2002-G
A2R3	0757-0907	1	2	RESISTOR 200 2% .125W F TC=0+-100	24546	C4-1/8-T0-201-G
A2R4	0757-0955	9		RESISTOR 20K 2% .125W F TC=0+-100	24546	C4-1/8-T0-2002-G
A2R5	0757-0972	0	2	RESISTOR 100K 2% .125W F TC=0+-100	24546	C4-1/8-T0-1002-G
A2R6	0757-0911	7	1	RESISTOR 300 2% .125W F TC=0+-100	24546	C4-1/8-T0-301-G
A2R7	0757-0929	7	1	RESISTOR 1.6K 2% .125W F TC=0+-100	24546	C4-1/8-T0-1601-G
A2R8	0757-0955	9		RESISTOR 20K 2% .125W F TC=0+-100	24546	C4-1/8-T0-2002-G
A2R9	0757-0900	4	1	RESISTOR 100 2% .125W F TC=0+-100	24546	C4-1/8-T0-101-G
A2R10	0757-0948	0	7	RESISTOR 10K 2% .125W F TC=0+-100	24546	C4-1/8-T0-1002-G
A2R11	0757-0948	0		RESISTOR 10K 2% .125W F TC=0+-100	24546	C4-1/8-T0-1002-G
A2R12	0727-0004	6	1	RESISTOR 5 1% .5W CF TC=0+500	28480	0727-0004
A2R13	0683-0365	8	1	RESISTOR 3.6 5% .25W FC TC=+400/+500	01121	CB36G5
A2R14	0757-0948	0		RESISTOR 10K 2% .125W F TC=0+-100	24546	C4-1/8-T0-1002-G
A2R15*			1			
A2R16	0757-0948	0		RESISTOR 10K 2% .125W F TC=0+-100	24546	C4-1/8-T0-1002-G
A2R18	0757-0926	4	1	RESISTOR 1.2K 2% .125W F TC=0+-100	24546	C4-1/8-T0-1201-G
A2R19	0757-0931	1	1	RESISTOR 2K 2% .125W F TC=0+-100	24546	C4-1/8-T0-2001-G
A2R20	0757-0948	0		RESISTOR 10K 2% .125W F TC=0+-100	24546	C4-1/8-T0-1002-G
A2R21	0757-0948	0		RESISTOR 10K 2% .125W F TC=0+-100	24546	C4-1/8-T0-1002-G
A2R22	0757-0907	1		RESISTOR 200 2% .125W F TC=0+-100	24546	C4-1/8-T0-201-G
A2R23	0757-0288	1	1	RESISTOR 9.09K 1% .125W F TC=0+-100	19701	MF4C1/8-T0-9091-F
A2R24	0757-0924	2	1	RESISTOR 1K 2% .125W F TC=0+-100	24546	C4-1/8-T0-1001-G
A2R25	0757-0447	4	1	RESISTOR 16.2K 1% .125W F TC=0+-100	24546	C4-1/8-T0-1622-F
A2R26	0757-0443	0	1	RESISTOR 11K 1% .125W F TC=0+-100	24546	C4-1/8-T0-1102-F
A2R27	0757-0948	0		RESISTOR 10K 2% .125W F TC=0+-100	24546	C4-1/8-T0-1002-G
A2R28	0757-0941	3	2	RESISTOR 5.1K 2% .125W F TC=0+-100	24546	C4-1/8-T0-5101-G
A2R29	0757-0941	3		RESISTOR 5.1K 2% .125W F TC=0+-100	24546	C4-1/8-T0-5101-G
A2R30	0757-0972	0		RESISTOR 100K 2% .125W F TC=0+-100	24546	C4-1/8-T0-1002-G
A2R31	0757-0934	4	1	RESISTOR 2.7K 2% .125W F TC=0+-100	24546	C4-1/8-T0-2701-G
A2XF1	2110-0564	8	1	FUSEHOLDER BODY 12A MAX FOR UL	H9027	031.1657
	2110-0565	9	1	FUSEHOLDER CAP 12A MAX FOR UL	28480	2110-0565
	2110-0569	3	1		28480	2110-0569

See introduction to this section for ordering information
*Indicates factory selected value

Table 6-3. Option 002 and 003 Replaceable Parts (Cont'd)

Reference Designation	HP Part Number	C D	Qty	Description	Mfr Code	Mfr Part Number
	05065-0026	1	1	HOLDER, BATTERY	28480	05065-0026
BT1	05065-6062	3	1	CABLE ASSEMBLY, BATTERY	28480	05065-6062
DS3	2140-0025	9	1	LAMP-INCAND 327 28VDC 40MA T-1-3/4-BULB	28480	2140-0025
	1420-0066	1	1	BATTERY 25.2V 1.25A-HR NI-CD W-FLEX	28480	1420-0066
S6	3101-1164	8	1	SWITCH-TGL SUBMIN DPDT 5A 115VAC	28480	3101-1164
	1450-0114	3	1	LAMPHOLDER AMB-TP .332-DIA	28480	1450-0114

See introduction to this section for ordering information
*Indicates factory selected value

Table 6-4. Option 001 Replaceable Parts

Reference Designation	HP Part Number	C D	Qty	Description	Mfr Code	Mfr Part Number
				FOR OPTION 001 ONLY		
A5	05065-6084	9	1	MODULE ASSEMBLY, DIGITAL DIVIDER (SERIES 1904)	28480	05065-6084
A5J4	1250-0102	5	1	CONNECTOR-RF BNC FEM SGL-HOLE-FR 50-OHM	28480	1250-0102
A5S2	3101-1159	1	1	SWITCH-PB SPDT MOM .25A BLK-BTN	82389	963
A5W22	05065-6055	8	1	CABLE ASSEMBLY, 1 PPS	28480	05065-6055
	1250-0051	3	2	CONTACT-RF CONN SERIES BNC: FEMALE	02660	31-2109
	1250-0921	6	3	CONNECTOR-RF SMB FEM UNMTD 50-OHM	28480	1250-0921
	8120-0229	9	5	CABLE-COAX 50-OHM 29PF/FT	28480	8120-0229
A5W23	05065-6056	0	1	CABLE ASSEMBLY, CLOCK MOVEMENT	28480	05065-6056
	8120-0101	6	1	CABLE-8MLD 26AWG 3-CNDCT JGK-JKT	28480	8120-0101
	5020-0176	0	1	INSULATOR FOR SNAP-ON PINS	28480	5020-0176
A5W24	05065-6053	4	1	CABLE ASSEMBLY, DIGITAL DIVIDER	28480	05065-6053
	1250-0050	2	1	NUT-RF CONNECTOR BNC:.562 LG,.062ID	02660	31-2125-2
	1250-0051	3		CONTACT-RF CONN SERIES BNC: FEMALE	02660	31-2109
	1250-0259	3	4	CONNECTOR-RF SMB FEM UNMTD 50-OHM	28480	1250-0259
	1250-0260	6	4	CONT-RF CONN SUBMIN SERIES	28480	1250-0260
	1250-0261	7	4	INSULATOR-RF CONN SUBMIN: .040 ID	28480	1250-0261
	1250-0263	9	4	WASHER-RF CONN SUBMIN: .104 ID	28480	1250-0263
	1250-0264	0	4	WASHER-RF CONN SUBMIN: 112 ID	28480	1250-0264
	1250-0265	1	4	NUT-RF CONN SUBMIN: FOR 50 OHM	28480	1250-0265
	8120-0229	9		CABLE-COAX 50-OHM 29PF/FT	28480	8120-0229
A5W25	05065-6052	2	1	CABLE ASSEMBLY, DIGITAL DIVIDER	28480	05065-6052
	1250-0259	3		CONNECTOR-RF SMB FEM UNMTD 50-OHM	28480	1250-0259
	1250-0260	6		CONT-RF CONN SUBMIN SERIES	28480	1250-0260
	1250-0261	7		INSULATOR-RF CONN SUBMIN: .040 ID	28480	1250-0261
	1250-0262	8	2	FERRULE-RF CONN SUBMIN: .065 ID	28480	1250-0262
	1250-0263	9		WASHER-RF CONN SUBMIN: .104 ID	28480	1250-0263
	1250-0264	0		WASHER-RF CONN SUBMIN: 112 ID	28480	1250-0264
	1250-0265	1		NUT-RF CONN SUBMIN: FOR 50 OHM	28480	1250-0265
	8120-0229	9		CABLE-COAX 50-OHM 29PF/FT	28480	8120-0229
A5W26	05065-6054	6	1	CABLE ASSEMBLY, DIGITAL DIVIDER	28480	05065-6054
	1250-0259	3		CONNECTOR-RF SMB FEM UNMTD 50-OHM	28480	1250-0259
	1250-0260	6		CONT-RF CONN SUBMIN SERIES	28480	1250-0260
	1250-0261	7		INSULATOR-RF CONN SUBMIN: .040 ID	28480	1250-0261
	1250-0263	9		WASHER-RF CONN SUBMIN: .104 ID	28480	1250-0263
	1250-0264	0		WASHER-RF CONN SUBMIN: 112 ID	28480	1250-0264
	1250-0265	1		NUT-RF CONN SUBMIN: FOR 50 OHM	28480	1250-0265
	1250-0921	6		CONNECTOR-RF SMB FEM UNMTD 50-OHM	28480	1250-0921
	8120-0229	9		CABLE-COAX 50-OHM 29PF/FT	28480	8120-0229
A5W27	05065-6063	5	1	CABLE ASSEMBLY, DIGITAL DIVIDER	28480	05065-6063
	1250-0259	3		CONNECTOR-RF SMB FEM UNMTD 50-OHM	28480	1250-0259
	1250-0260	6		CONT-RF CONN SUBMIN SERIES	28480	1250-0260
	1250-0261	7		INSULATOR-RF CONN SUBMIN: .040 ID	28480	1250-0261
	1250-0262	8		FERRULE-RF CONN SUBMIN: .065 ID	28480	1250-0262
	1250-0263	9		WASHER-RF CONN SUBMIN: .104 ID	28480	1250-0263
	1250-0264	0		WASHER-RF CONN SUBMIN: 112 ID	28480	1250-0264
	1250-0265	1		NUT-RF CONN SUBMIN: FOR 50 OHM	28480	1250-0265
	1250-0921	6		CONNECTOR-RF SMB FEM UNMTD 50-OHM	28480	1250-0921
	8120-0229	9		CABLE-COAX 50-OHM 29PF/FT	28480	8120-0229
				A5 MISCELLANEOUS PARTS		
	05061-0022	9	1	PANEL, CENTER	28480	05061-0022
	05061-0013	0	1	BRACKET, DIGITAL DIVIDER	28480	05061-0013
	05065-0028	5	1	BRACKET, SWITCH MOUNTING	28480	05065-0028
	05065-0048	7	1	CHASSIS, DIGITAL DIVIDER	28480	05065-0048
	05065-0038	6	1	COVER, DIGITAL DIVIDER	28480	05065-0038
	05065-2006	1	1	PLATE, END, DIGITAL DIVIDER	28480	05065-2006
A5A1	05065-6027	9	1	BOARD ASSEMBLY, ADAPTER	28480	05065-6027
	05065-6026	7	1	BOARD ASSEMBLY, INTERCONNECTING	28480	05065-6026
A5A1J1	1250-0257	1	4	CONNECTOR-RF SMB M PC 50-OHM	28480	1250-0257
A5A1J2	1250-0257	1		CONNECTOR-RF SMB M PC 50-OHM	28480	1250-0257
A5A1J3	1250-0257	1		CONNECTOR-RF SMB M PC 50-OHM	28480	1250-0257
A5A1J4	1250-0257	1		CONNECTOR-RF SMB M PC 50-OHM	28480	1250-0257
A5A2	05061-6014	8	1	BOARD ASSEMBLY, MAST CLOCK (SERIES 1840)	28480	05061-6014
A5A2C1	0150-0121	5	2	CAPACITOR-FXD .1UF +80-20% 50VDC CER	28480	0150-0121
A5A2C2	0150-0093	0	2	CAPACITOR-FXD .01UF +80-20% 100VDC CER	28480	0150-0093
A5A2C3	0160-0127	2	1	CAPACITOR-FXD 1UF +-20% 25VDC CER	28480	0160-0127
A5A2C4	0140-0180	5	1	CAPACITOR-FXD 2000PF +-2% 300VDC MICA	72136	DM19F202G0300WV1CR
A5A2C5	0150-0121	5		CAPACITOR-FXD .1UF +80-20% 50VDC CER	28480	0150-0121
A5A2C6	0140-0234	0	2	CAPACITOR-FXD 500PF +-1% 300VDC MICA	72136	DM15F501F0300WV1C
A5A2C7	0160-0196	5	1	CAPACITOR-FXD 24PF +-5% 300VDC MICA	28480	0160-0196
A5A2C8	0140-0234	0		CAPACITOR-FXD 500PF +-1% 300VDC MICA	72136	DM15F501F0300WV1C
A5A2C9	0121-0105	4	1	CAPACITOR-V TRMR-CER 9-35PF 200V PC-MTG	52763	304324 9/35PF N650
A5A2C10	0140-0208	8	1	CAPACITOR-FXD 680PF +-5% 300VDC MICA	72136	DM15F681J0300WV1CR

See introduction to this section for ordering information
*Indicates factory selected value

Table 6-4. Option 001 Replaceable Parts (Cont'd)

Reference Designation	HP Part Number	C D	Qty	Description	Mfr Code	Mfr Part Number
A5A2C11	0150-0093	0		CAPACITOR-FXD .01UF +80-20% 100VDC CER	28480	0150-0093
A5A2C12	0140-0202	2	1	CAPACITOR-FXD 15PF +-5% 500VDC MICA	72136	DM15C150J0500WV1CR
A5A2C13	0160-2197	0	1	CAPACITOR-FXD 10PF +-5% 300VDC MICA	28480	0160-2197
A5A2CR1	1901-0040	1	6	DIODE-SWITCHING 30V 50MA 2NS DO-35	28480	1901-0040
A5A2CR2	1901-0040	1		DIODE-SWITCHING 30V 50MA 2NS DO-35	28480	1901-0040
A5A2CR3	1902-0064	1	1	DIODE-ZNR 7.5V 5% DO-7 PD=.4W TC=+.05%	28480	1902-0064
A5A2CR4	1901-0028	5	4	DIODE-PWR RECT 400V 750MA DO-29	28480	1901-0028
A5A2CR5	1901-0028	5		DIODE-PWR RECT 400V 750MA DO-29	28480	1901-0028
A5A2CR6	1901-0028	5		DIODE-PWR RECT 400V 750MA DO-29	28480	1901-0028
A5A2CR7	1901-0028	5		DIODE-PWR RECT 400V 750MA DO-29	28480	1901-0028
A5A2CR8	1902-3193	3	1	DIODE-ZNR 13.3V 5% DO-7 PD=.4W TC=+.059%	28480	1902-3193
A5A2CR9	1901-0040	1		DIODE-SWITCHING 30V 50MA 2NS DO-35	28480	1901-0040
A5A2CR10	1901-0040	1		DIODE-SWITCHING 30V 50MA 2NS DO-35	28480	1901-0040
A5A2CR11	1902-0554	4	1	DIODE-ZNR 10V 5% DO-15 PD=1W TC=+.06%	28480	1902-0554
A5A2IC1	1820-0315	1	6	IC MV DTL MONOSTBL	07263	951HC
A5A2IC2	1820-0315	1		IC MV DTL MONOSTBL	07263	951HC
A5A2IC3	1820-0315	1		IC MV DTL MONOSTBL	07263	951HC
A5A2IC4	1820-0094	3	4	IC GATE DTL NAND QUAD 2-INP	01295	SN15846N
A5A2IC5	1820-0094	3		IC GATE DTL NAND QUAD 2-INP	01295	SN15846N
A5A2IC6	1820-0329	7	12	IC CNTR TTL DECD	28480	1820-0329
A5A2IC7	1820-0329	7		IC CNTR TTL DECD	28480	1820-0329
A5A2IC8	1820-0329	7		IC CNTR TTL DECD	28480	1820-0329
A5A2IC9	1820-0329	7		IC CNTR TTL DECD	28480	1820-0329
A5A2IC10	1820-0329	7		IC CNTR TTL DECD	28480	1820-0329
A5A2IC11	1820-0329	7		IC CNTR TTL DECD	28480	1820-0329
A5A2IC12	1820-0086	3	4	IC GATE DTL NAND DUAL 4-INP	01295	SN15830N
A5A2IC13	1820-0086	3		IC GATE DTL NAND DUAL 4-INP	01295	SN15830N
A5A2IC14	1820-0086	3		IC GATE DTL NAND DUAL 4-INP	01295	SN15830N
A5A2L2	9140-0137	1	1	COIL-MLD 1MH 5% Q=60 .19Dx.44LG-NOM	28480	9140-0137
A5A2L3	9140-0154	2	1	COIL-MLD 53.8UH 1% Q=55 .156Dx.375LG-NOM	28480	9140-0154
A5A2Q1	1854-0005	7	3	TRANSISTOR NPN 2N708 SI TO-18 PD=360MW	04713	2N708
A5A2Q2	1854-0005	7		TRANSISTOR NPN 2N708 SI TO-18 PD=360MW	04713	2N708
A5A2Q3	1854-0009	1	16	TRANSISTOR NPN SI PD=300MW FT=600MHZ	04713	2N709
A5A2Q4	1854-0009	1		TRANSISTOR NPN SI PD=300MW FT=600MHZ	04713	2N709
A5A2Q5	1854-0009	1		TRANSISTOR NPN SI PD=300MW FT=600MHZ	04713	2N709
A5A2Q6	1854-0009	1		TRANSISTOR NPN SI PD=300MW FT=600MHZ	04713	2N709
A5A2Q7	1854-0009	1		TRANSISTOR NPN SI PD=300MW FT=600MHZ	04713	2N709
A5A2R1	0757-0924	2	23	RESISTOR 1K 2% .125W F TC=0+-100	24546	C4-1/8-T0-1001-G
A5A2R2	0757-0946	8	1	RESISTOR 8.2K 2% .125W F TC=0+-100	24546	C4-1/8-T0-8201-G
A5A2R3	0757-0948	0	9	RESISTOR 10K 2% .125W F TC=0+-100	24546	C4-1/8-T0-1002-G
A5A2R4	0757-0924	2		RESISTOR 1K 2% .125W F TC=0+-100	24546	C4-1/8-T0-1001-G
A5A2R5	0757-0900	4	5	RESISTOR 100 2% .125W F TC=0+-100	24546	C4-1/8-T0-101-G
A5A2R6	0757-0900	4		RESISTOR 100 2% .125W F TC=0+-100	24546	C4-1/8-T0-101-G
A5A2R7	0757-0920	6	1	RESISTOR 680 2% .125W F TC=0+-100	24546	C4-1/8-T0-681-G
A5A2R8	0757-0900	4		RESISTOR 100 2% .125W F TC=0+-100	24546	C4-1/8-T0-101-G
A5A2R9	0757-0924	2		RESISTOR 1K 2% .125W F TC=0+-100	24546	C4-1/8-T0-1001-G
A5A2R10	0757-0900	4		RESISTOR 100 2% .125W F TC=0+-100	24546	C4-1/8-T0-101-G
A5A2R11	0757-0924	2		RESISTOR 1K 2% .125W F TC=0+-100	24546	C4-1/8-T0-1001-G
A5A2R12	0757-0924	2		RESISTOR 1K 2% .125W F TC=0+-100	24546	C4-1/8-T0-1001-G
A5A2R13	0757-0931	1	45	RESISTOR 2K 2% .125W F TC=0+-100	24546	C4-1/8-T0-2001-G
A5A2R14	0757-0948	0		RESISTOR 10K 2% .125W F TC=0+-100	24546	C4-1/8-T0-1002-G
A5A2R15	0757-0948	0		RESISTOR 10K 2% .125W F TC=0+-100	24546	C4-1/8-T0-1002-G
A5A2R16	0757-0948	0		RESISTOR 10K 2% .125W F TC=0+-100	24546	C4-1/8-T0-1002-G
A5A2R17	0757-0924	2		RESISTOR 1K 2% .125W F TC=0+-100	24546	C4-1/8-T0-1001-G
A5A2R18	0757-0917	3	4	RESISTOR 510 2% .125W F TC=0+-100	24546	C4-1/8-T0-511-G
A5A2R19	0757-0931	1		RESISTOR 2K 2% .125W F TC=0+-100	24546	C4-1/8-T0-2001-G
A5A2R20	0757-0972	0	1	RESISTOR 100K 2% .125W F TC=0+-100	24546	C4-1/8-T0-1002-G
A5A2R21	0757-0924	2		RESISTOR 1K 2% .125W F TC=0+-100	24546	C4-1/8-T0-1001-G
A5A2R22	0757-0938	8	2	RESISTOR 3.9K 2% .125W F TC=0+-100	24546	C4-1/8-T0-3901-G
A5A2R23	0757-0924	2		RESISTOR 1K 2% .125W F TC=0+-100	24546	C4-1/8-T0-1001-G
A5A2R24	0757-0900	4		RESISTOR 100 2% .125W F TC=0+-100	24546	C4-1/8-T0-101-G
A5A2R25	0757-0924	2		RESISTOR 1K 2% .125W F TC=0+-100	24546	C4-1/8-T0-1001-G
A5A2R26	0757-0931	1		RESISTOR 2K 2% .125W F TC=0+-100	24546	C4-1/8-T0-2001-G
A5A2R27	0757-0948	0		RESISTOR 10K 2% .125W F TC=0+-100	24546	C4-1/8-T0-1002-G
A5A2R28	0757-0948	0		RESISTOR 10K 2% .125W F TC=0+-100	24546	C4-1/8-T0-1002-G
A5A2R29	0757-0931	1		RESISTOR 2K 2% .125W F TC=0+-100	24546	C4-1/8-T0-2001-G
A5A2R30	0757-0931	1		RESISTOR 2K 2% .125W F TC=0+-100	24546	C4-1/8-T0-2001-G
A5A2R31	0757-0931	1		RESISTOR 2K 2% .125W F TC=0+-100	24546	C4-1/8-T0-2001-G
A5A2R32	0757-0931	1		RESISTOR 2K 2% .125W F TC=0+-100	24546	C4-1/8-T0-2001-G
A5A2R33	0757-0931	1		RESISTOR 2K 2% .125W F TC=0+-100	24546	C4-1/8-T0-2001-G
A5A2R34	0757-0931	1		RESISTOR 2K 2% .125W F TC=0+-100	24546	C4-1/8-T0-2001-G
A5A2R35	0757-0931	1		RESISTOR 2K 2% .125W F TC=0+-100	24546	C4-1/8-T0-2001-G

See introduction to this section for ordering information
*Indicates factory selected value

Table 6-4. Option 001 Replaceable Parts (Cont'd)

Reference Designation	HP Part Number	C D	Qty	Description	Mfr Code	Mfr Part Number
A5A2R36	0757-0931	1		RESISTOR 2K 2% .125W F TC=0+-100	24546	C4-1/8-T0-2001-G
A5A2R37	0757-0931	1		RESISTOR 2K 2% .125W F TC=0+-100	24546	C4-1/8-T0-2001-G
A5A2R38	0757-0931	1		RESISTOR 2K 2% .125W F TC=0+-100	24546	C4-1/8-T0-2001-G
A5A2R39	0757-0931	1		RESISTOR 2K 2% .125W F TC=0+-100	24546	C4-1/8-T0-2001-G
A5A2R40	0757-0931	1		RESISTOR 2K 2% .125W F TC=0+-100	24546	C4-1/8-T0-2001-G
A5A2R41	0757-0931	1		RESISTOR 2K 2% .125W F TC=0+-100	24546	C4-1/8-T0-2001-G
A5A2R42	0757-0931	1		RESISTOR 2K 2% .125W F TC=0+-100	24546	C4-1/8-T0-2001-G
A5A2R43	0757-0931	1		RESISTOR 2K 2% .125W F TC=0+-100	24546	C4-1/8-T0-2001-G
A5A2R44	0757-0931	1		RESISTOR 2K 2% .125W F TC=0+-100	24546	C4-1/8-T0-2001-G
A5A2R45	0757-0931	1		RESISTOR 2K 2% .125W F TC=0+-100	24546	C4-1/8-T0-2001-G
A5A2R46	0757-0931	1		RESISTOR 2K 2% .125W F TC=0+-100	24546	C4-1/8-T0-2001-G
A5A2T1	05061-6005	1	1	TRANSFORMER, 1 MHZ - 4 MHZ	28480	05061-6005
A5A2T2	05061-6009	9	1	TRANSFORMER, SYNC	28480	05061-6009
A5A2XY1	1200-0159	7	1	SOCKET-XTAL 2-CONT HC-6/U DIP-SLDR	28480	1200-0159
A5A2Y1	0410-0012	5	1	CRYSTAL-QUARTZ 1.00000 MHZ	28480	0410-0012
A5A3	05061-6013	6	1	BOARD ASSEMBLY, PRESET-CLOCK	28480	05061-6013
A5A3C1	0140-0196	3		CAPACITOR-FXD 150PF +-5% 300VDC MICA	72136	DM15F151J0300WV1CR
A5A3C2	0140-0191	8	1	CAPACITOR-FXD 56PF +-5% 300VDC MICA	72136	DM15E560J0300WV1CR
A5A3C3	0140-0196	3		CAPACITOR-FXD 150PF +-5% 300VDC MICA	72136	DM15F151J0300WV1CR
A5A3CR1	1910-0016	0	24	DIODE-GE 60V 60MA 1US DO-7	28480	1910-0016
A5A3CR2	1910-0016	0		DIODE-GE 60V 60MA 1US DO-7	28480	1910-0016
A5A3CR3	1910-0016	0		DIODE-GE 60V 60MA 1US DO-7	28480	1910-0016
A5A3CR4	1910-0016	0		DIODE-GE 60V 60MA 1US DO-7	28480	1910-0016
A5A3CR5	1910-0016	0		DIODE-GE 60V 60MA 1US DO-7	28480	1910-0016
A5A3CR6	1910-0016	0		DIODE-GE 60V 60MA 1US DO-7	28480	1910-0016
A5A3CR7	1910-0016	0		DIODE-GE 60V 60MA 1US DO-7	28480	1910-0016
A5A3CR8	1910-0016	0		DIODE-GE 60V 60MA 1US DO-7	28480	1910-0016
A5A3CR9	1910-0016	0		DIODE-GE 60V 60MA 1US DO-7	28480	1910-0016
A5A3CR10	1910-0016	0		DIODE-GE 60V 60MA 1US DO-7	28480	1910-0016
A5A3CR11	1910-0016	0		DIODE-GE 60V 60MA 1US DO-7	28480	1910-0016
A5A3CR12	1910-0016	0		DIODE-GE 60V 60MA 1US DO-7	28480	1910-0016
A5A3CR13	1910-0016	0		DIODE-GE 60V 60MA 1US DO-7	28480	1910-0016
A5A3CR14	1910-0016	0		DIODE-GE 60V 60MA 1US DO-7	28480	1910-0016
A5A3CR15	1910-0016	0		DIODE-GE 60V 60MA 1US DO-7	28480	1910-0016
A5A3CR16	1910-0016	0		DIODE-GE 60V 60MA 1US DO-7	28480	1910-0016
A5A3CR17	1901-0040	1		DIODE-SWITCHING 30V 50MA 2NS DO-35	28480	1901-0040
A5A3CR18	1901-0040	1		DIODE-SWITCHING 30V 50MA 2NS DO-35	28480	1901-0040
A5A3CR19	1910-0016	0		DIODE-GE 60V 60MA 1US DO-7	28480	1910-0016
A5A3CR20	1910-0016	0		DIODE-GE 60V 60MA 1US DO-7	28480	1910-0016
A5A3CR21	1910-0016	0		DIODE-GE 60V 60MA 1US DO-7	28480	1910-0016
A5A3CR22	1910-0016	0		DIODE-GE 60V 60MA 1US DO-7	28480	1910-0016
A5A3CR23	1910-0016	0		DIODE-GE 60V 60MA 1US DO-7	28480	1910-0016
A5A3CR24	1910-0016	0		DIODE-GE 60V 60MA 1US DO-7	28480	1910-0016
A5A3CR25	1910-0016	0		DIODE-GE 60V 60MA 1US DO-7	28480	1910-0016
A5A3CR26	1910-0016	0		DIODE-GE 60V 60MA 1US DO-7	28480	1910-0016
A5A3IC1	1820-0094	3		IC GATE DTL NAND QUAD 2-INP	01295	SN15846N
A5A3IC2	1820-0094	3		IC GATE DTL NAND QUAD 2-INP	01295	SN15846N
A5A3IC3	1820-0329	7		IC CNTR TTL DECD	28480	1820-0329
A5A3IC4	1820-0329	7		IC CNTR TTL DECD	28480	1820-0329
A5A3IC5	1820-0329	7		IC CNTR TTL DECD	28480	1820-0329
A5A3IC6	1820-0329	7		IC CNTR TTL DECD	28480	1820-0329
A5A3IC7	1820-0329	7		IC CNTR TTL DECD	28480	1820-0329
A5A3IC8	1820-0329	7		IC CNTR TTL DECD	28480	1820-0329
A5A3IC9	1820-0080	7	4	IC GATE RTL NOR DUAL 2-INP	04713	MC810G
A5A3IC10	1820-0080	7		IC GATE RTL NOR DUAL 2-INP	04713	MC810G
A5A3IC11	1820-0080	7		IC GATE RTL NOR DUAL 2-INP	04713	MC810G
A5A3IC12	1820-0086	3		IC GATE DTL NAND DUAL 4-INP	01295	SN15830N
A5A3IC13	1820-0315	1		IC MV DTL MONOSTBL	07263	951MC
A5A3IC14				NOT ASSIGNED		
A5A3IC15	1820-0315	1		IC MV DTL MONOSTBL	07263	951MC
A5A3IC16	1820-0315	1		IC MV DTL MONOSTBL	07263	951MC
A5A3IC17	1820-0080	7		IC GATE RTL NOR DUAL 2-INP	04713	MC810G
A5A3Q1	1854-0009	1		TRANSISTOR NPN SI PD=300MW FT=600MHZ	04713	2N709
A5A3Q2	1854-0009	1		TRANSISTOR NPN SI PD=300MW FT=600MHZ	04713	2N709
A5A3Q3	1854-0009	1		TRANSISTOR NPN SI PD=300MW FT=600MHZ	04713	2N709
A5A3Q4	1854-0009	1		TRANSISTOR NPN SI PD=300MW FT=600MHZ	04713	2N709
A5A3Q5	1854-0009	1		TRANSISTOR NPN SI PD=300MW FT=600MHZ	04713	2N709
A5A3Q6	1854-0009	1		TRANSISTOR NPN SI PD=300MW FT=600MHZ	04713	2N709
A5A3Q7	1854-0009	1		TRANSISTOR NPN SI PD=300MW FT=600MHZ	04713	2N709
A5A3Q8	1854-0018	2	3	TRANSISTOR NPN SI TO-18 PD=360MW	28480	1854-0018
A5A3Q9	1854-0009	1		TRANSISTOR NPN SI PD=300MW FT=600MHZ	04713	2N709
A5A3Q10	1854-0018	2		TRANSISTOR NPN SI TO-18 PD=360MW	28480	1854-0018

See introduction to this section for ordering information
*Indicates factory selected value

Table 6-4. Option 001 Replaceable Parts (Cont'd)

Reference Designation	HP Part Number	C D	Qty	Description	Mfr Code	Mfr Part Number
A5A3Q11	1854-0009	1		TRANSISTOR NPN SI PD=300MW FT=600MHZ	04713	2N709
A5A3Q12	1854-0018	2		TRANSISTOR NPN SI TO-18 PD=360MW	28480	1854-0018
A5A3Q13	1854-0009	1		TRANSISTOR NPN SI PD=300MW FT=600MHZ	04713	2N709
A5A3Q14	1854-0003	5	1	TRANSISTOR NPN SI TO-39 PD=800MW	28480	1854-0003
A5A3Q15	1854-0009	1		TRANSISTOR NPN SI PD=300MW FT=600MHZ	04713	2N709
A5A3R1	0757-0931	1		RESISTOR 2K 2% .125W F TC=0+-100	24546	C4-1/8-T0-2001-G
A5A3R2	0757-0931	1		RESISTOR 2K 2% .125W F TC=0+-100	24546	C4-1/8-T0-2001-G
A5A3R3	0757-0928	6	12	RESISTOR 1.5K 2% .125W F TC=0+-100	24546	C4-1/8-T0-1501-G
A5A3R4	0757-0928	6		RESISTOR 1.5K 2% .125W F TC=0+-100	24546	C4-1/8-T0-1501-G
A5A3R5	0757-0935	5	5	RESISTOR 3K 2% .125W F TC=0+-100	24546	C4-1/8-T0-3001-G
A5A3R6	0757-0931	1		RESISTOR 2K 2% .125W F TC=0+-100	24546	C4-1/8-T0-2001-G
A5A3R7	0757-0931	1		RESISTOR 2K 2% .125W F TC=0+-100	24546	C4-1/8-T0-2001-G
A5A3R8	0757-0931	1		RESISTOR 2K 2% .125W F TC=0+-100	24546	C4-1/8-T0-2001-G
A5A3R9	0757-0928	6		RESISTOR 1.5K 2% .125W F TC=0+-100	24546	C4-1/8-T0-1501-G
A5A3R10	0757-0928	6		RESISTOR 1.5K 2% .125W F TC=0+-100	24546	C4-1/8-T0-1501-G
A5A3R11	0757-0935	5		RESISTOR 3K 2% .125W F TC=0+-100	24546	C4-1/8-T0-3001-G
A5A3R12	0757-0931	1		RESISTOR 2K 2% .125W F TC=0+-100	24546	C4-1/8-T0-2001-G
A5A3R13	0757-0931	1		RESISTOR 2K 2% .125W F TC=0+-100	24546	C4-1/8-T0-2001-G
A5A3R14	0757-0931	1		RESISTOR 2K 2% .125W F TC=0+-100	24546	C4-1/8-T0-2001-G
A5A3R15	0757-0928	6		RESISTOR 1.5K 2% .125W F TC=0+-100	24546	C4-1/8-T0-1501-G
A5A3R16	0757-0928	6		RESISTOR 1.5K 2% .125W F TC=0+-100	24546	C4-1/8-T0-1501-G
A5A3R17	0757-0935	5		RESISTOR 3K 2% .125W F TC=0+-100	24546	C4-1/8-T0-3001-G
A5A3R18	0757-0931	1		RESISTOR 2K 2% .125W F TC=0+-100	24546	C4-1/8-T0-2001-G
A5A3R19	0757-0931	1		RESISTOR 2K 2% .125W F TC=0+-100	24546	C4-1/8-T0-2001-G
A5A3R20	0757-0931	1		RESISTOR 2K 2% .125W F TC=0+-100	24546	C4-1/8-T0-2001-G
A5A3R21	0757-0928	6		RESISTOR 1.5K 2% .125W F TC=0+-100	24546	C4-1/8-T0-1501-G
A5A3R22	0757-0928	6		RESISTOR 1.5K 2% .125W F TC=0+-100	24546	C4-1/8-T0-1501-G
A5A3R23	0757-0935	5		RESISTOR 3K 2% .125W F TC=0+-100	24546	C4-1/8-T0-3001-G
A5A3R24	0757-0931	1		RESISTOR 2K 2% .125W F TC=0+-100	24546	C4-1/8-T0-2001-G
A5A3R25	0757-0931	1		RESISTOR 2K 2% .125W F TC=0+-100	24546	C4-1/8-T0-2001-G
A5A3R26	0757-0931	1		RESISTOR 2K 2% .125W F TC=0+-100	24546	C4-1/8-T0-2001-G
A5A3R27	0757-0928	6		RESISTOR 1.5K 2% .125W F TC=0+-100	24546	C4-1/8-T0-1501-G
A5A3R28	0757-0928	6		RESISTOR 1.5K 2% .125W F TC=0+-100	24546	C4-1/8-T0-1501-G
A5A3R29	0757-0935	5		RESISTOR 3K 2% .125W F TC=0+-100	24546	C4-1/8-T0-3001-G
A5A3R30	0757-0931	1		RESISTOR 2K 2% .125W F TC=0+-100	24546	C4-1/8-T0-2001-G
A5A3R31	0757-0931	1		RESISTOR 2K 2% .125W F TC=0+-100	24546	C4-1/8-T0-2001-G
A5A3R32	0757-0931	1		RESISTOR 2K 2% .125W F TC=0+-100	24546	C4-1/8-T0-2001-G
A5A3R33	0757-0928	6		RESISTOR 1.5K 2% .125W F TC=0+-100	24546	C4-1/8-T0-1501-G
A5A3R34	0757-0928	6		RESISTOR 1.5K 2% .125W F TC=0+-100	24546	C4-1/8-T0-1501-G
A5A3R35	0757-0931	1		RESISTOR 2K 2% .125W F TC=0+-100	24546	C4-1/8-T0-2001-G
A5A3R36	0757-0931	1		RESISTOR 2K 2% .125W F TC=0+-100	24546	C4-1/8-T0-2001-G
A5A3R37	0757-0931	1		RESISTOR 2K 2% .125W F TC=0+-100	24546	C4-1/8-T0-2001-G
A5A3R38	0757-0931	1		RESISTOR 2K 2% .125W F TC=0+-100	24546	C4-1/8-T0-2001-G
A5A3R39	0757-0924	2		RESISTOR 1K 2% .125W F TC=0+-100	24546	C4-1/8-T0-1001-G
A5A3R40	0757-0931	1		RESISTOR 2K 2% .125W F TC=0+-100	24546	C4-1/8-T0-2001-G
A5A3R41	0757-0931	1		RESISTOR 2K 2% .125W F TC=0+-100	24546	C4-1/8-T0-2001-G
A5A3R42	0757-0917	3		RESISTOR 510 2% .125W F TC=0+-100	24546	C4-1/8-T0-511-G
A5A3R43	0757-0948	0		RESISTOR 10K 2% .125W F TC=0+-100	24546	C4-1/8-T0-1002-G
A5A3R44	0757-0924	2		RESISTOR 1K 2% .125W F TC=0+-100	24546	C4-1/8-T0-1001-G
A5A3R45	0757-0924	2		RESISTOR 1K 2% .125W F TC=0+-100	24546	C4-1/8-T0-1001-G
A5A3R46	0757-0948	0		RESISTOR 10K 2% .125W F TC=0+-100	24546	C4-1/8-T0-1002-G
A5A3R47	0757-0924	2		RESISTOR 1K 2% .125W F TC=0+-100	24546	C4-1/8-T0-1001-G
A5A3R48	0757-0924	2		RESISTOR 1K 2% .125W F TC=0+-100	24546	C4-1/8-T0-1001-G
A5A3R49	0757-0924	2		RESISTOR 1K 2% .125W F TC=0+-100	24546	C4-1/8-T0-1001-G
A5A3R50	0757-0917	3		RESISTOR 510 2% .125W F TC=0+-100	24546	C4-1/8-T0-511-G
A5A3R51	0757-0924	2		RESISTOR 1K 2% .125W F TC=0+-100	24546	C4-1/8-T0-1001-G
A5A3R52	0757-0924	2		RESISTOR 1K 2% .125W F TC=0+-100	24546	C4-1/8-T0-1001-G
A5A3R53	0757-0924	2		RESISTOR 1K 2% .125W F TC=0+-100	24546	C4-1/8-T0-1001-G
A5A3R54	0757-0917	3		RESISTOR 510 2% .125W F TC=0+-100	24546	C4-1/8-T0-511-G
A5A3R55	0757-0924	2		RESISTOR 1K 2% .125W F TC=0+-100	24546	C4-1/8-T0-1001-G
A5A3R56	0757-0924	2		RESISTOR 1K 2% .125W F TC=0+-100	24546	C4-1/8-T0-1001-G
A5A3R57	0757-0948	0		RESISTOR 10K 2% .125W F TC=0+-100	24546	C4-1/8-T0-1002-G
A5A3R58	0757-0924	2		RESISTOR 1K 2% .125W F TC=0+-100	24546	C4-1/8-T0-1001-G
A5A3R59	0757-0938	8		RESISTOR 3.9K 2% .125W F TC=0+-100	24546	C4-1/8-T0-3901-G
A5A3R60	0757-0931	1		RESISTOR 2K 2% .125W F TC=0+-100	24546	C4-1/8-T0-2001-G
A5A3R61	0757-0924	2		RESISTOR 1K 2% .125W F TC=0+-100	24546	C4-1/8-T0-1001-G
A5A3R62	0757-0924	2		RESISTOR 1K 2% .125W F TC=0+-100	24546	C4-1/8-T0-1001-G
A5A381	3100-2061	4	1	SWITCH-THUMBWHEEL MOD; BCD WITH ONE	28480	3100-2061
A5A4	05061-6152	0	1	BOARD ASSEMBLY, SWITCH CIRCUIT (SERIES 1904)	28480	05061-6152
A5A4C1*	0140-0196	3	3	CAPACITOR-FXD 150PF +-5% 300VDC MICA	72136	DM15F151J0300WV1CR
A5A4Q1	1854-0005	7		TRANSISTOR NPN 2N708 SI TO-18 PD=360MW	04713	2N708
A5A4R1	0757-0280	3	1	RESISTOR 1K 1% .125W F TC=0+-100	24546	C4-1/8-TO-1001-F
A5A4R2	0757-0283	6	1	RESISTOR 2K 1% .125W F TC=0+-100	24546	C4-1/8-TO-2001-F
A5A4R3	0757-0442	9	1	RESISTOR 10K 1% .125W F TC=0+-100	24546	C4-1/8-TO-1002-F
A5A4R4	2100-0896	8	1	RESISTOR-TRMR 15K 5% WW TOP-ADJ 1-TRN	28480	2100-0896
A5A4UC1	1820-1437	0	1	IC MV TTL LS MONOSTBL DUAL	01295	SN74LS221N

See introduction to this section for ordering information
*Indicates factory selected value

Table 6-5. Options 001, 003 Only Replaceable Parts

Reference Designation	HP Part Number	C D	Qty	Description	Mfr Code	Mfr Part Number
				FOR OPTIONS 001,003 ONLY		
A16	05065-6085	1	1	MODULE ASSEMBLY, CLOCK POWER SUPPLY (SERIES 1912)	28480	05065-6085
	05065-6055	8	1	CABLE ASSEMBLY, 1 PPS	28480	05065-6055
A16J1	1250-0901	2	2	CONNECTOR-RF SMB M SGL-HOLE-FR 50-OHM	28480	1250-0901
A16J2	1250-0901	2		CONNECTOR-RF SMB M SGL-HOLE-FR 50-OHM	28480	1250-0901
A16J3	1250-0258	2	2	CONNECTOR-RF SMB M SGL-HOLE-FR 50-OHM	28480	1250-0258
A16J4	1250-0258	2		CONNECTOR-RF SMB M SGL-HOLE-FR 50-OHM	28480	1250-0258
				A16 MISCELLANEOUS PARTS		
	0340-0119	4	1	TERMINAL-STUD SGL-PIN PRESS-MTG	28480	0340-0119
	05065-0039	8	1	COVER, POWER SUPPLY	28480	05065-0039
	05065-0040	1	1	CHASSIS, POWER SUPPLY	28480	05065-0040
	05065-2039	0	1	PLATE, POWER SUPPLY	28480	05065-2039
A16A1	05065-6082	5	1	BOARD ASSEMBLY, POWER SUPPLY (NOT FOR REPLACEMENT) FOR REPLACEMENT ORDER NEXT HIGHER ASSY	28480	05065-6082
A16A1C1	0180-0113	8	1	CAPACITOR-FXD 100UF+20-15% 30VDC TA	06001	69F355G7
A16A1C2	0180-0097	7	1	CAPACITOR-FXD 47UF+-10% 35VDC TA	56289	150D476X903582
A16A1C3	0160-0162	5	1	CAPACITOR-FXD .022UF +-10% 200VDC POLYE	28480	0160-0162
A16A1C4	0150-0096	3	2	CAPACITOR-FXD .05UF +80-20% 100VDC CER	28480	0150-0096
A16A1C5	0150-0096	3		CAPACITOR-FXD .05UF +80-20% 100VDC CER	28480	0150-0096
A16A1C6	0180-0098	8	3	CAPACITOR-FXD 100UF+-20% 20VDC TA	56289	150D107X002082
A16A1C7	0180-0098	8		CAPACITOR-FXD 100UF+-20% 20VDC TA	56289	150D107X002082
A16A1C8	0180-0117	2	4	CAPACITOR-FXD 2.7UF+-10% 35VDC TA	56289	150D275X903582
A16A1C9	0180-0117	2		CAPACITOR-FXD 2.7UF+-10% 35VDC TA	56289	150D275X903582
A16A1C10	0150-0093	0	2	CAPACITOR-FXD .01UF +80-20% 100VDC CER	28480	0150-0093
A16A1C11	0180-0117	2		CAPACITOR-FXD 2.7UF+-10% 35VDC TA	56289	150D275X903582
A16A1C12	0140-0203	3	1	CAPACITOR-FXD 30PF +-5% 500VDC MICA	72136	DM15E300J0500WV1CR
A16A1C13	0160-0127	2	1	CAPACITOR-FXD 1UF +-20% 25VDC CER	28480	0160-0127
A16A1C14	0180-0117	2		CAPACITOR-FXD 2.7UF+-10% 35VDC TA	56289	150D275X903582
A16A1C15	0160-0174	9	1	CAPACITOR-FXD .47UF +80-20% 25VDC CER	28480	0160-0174
A16A1C16	0180-0116	1	2	CAPACITOR-FXD 6.8UF+-10% 35VDC TA	56289	150D685X903582
A16A1C17	0150-0093	0		CAPACITOR-FXD .01UF +80-20% 100VDC CER	28480	0150-0093
A16A1C18	0180-0098	8		CAPACITOR-FXD 100UF+-20% 20VDC TA	56289	150D107X002082
A16A1C19	0180-0116	1		CAPACITOR-FXD 6.8UF+-10% 35VDC TA	56289	150D685X903582
A16A1CR1	1901-0040	1	4	DIODE-SWITCHING 30V 50MA 2NS DO-35	28480	1901-0040
A16A1CR2	1901-0410	9	2	DIODE-PWR RECT 1N4720 100V 1.5A	04713	1N4720
A16A1CR3	1901-0410	9		DIODE-PWR RECT 1N4720 100V 1.5A	04713	1N4720
A16A1CR4	1901-0049	0	4	DIODE-PWR RECT 50V 750MA DO-29	28480	1901-0049
A16A1CR5	1901-0049	0		DIODE-PWR RECT 50V 750MA DO-29	28480	1901-0049
A16A1CR6	1901-0049	0		DIODE-PWR RECT 50V 750MA DO-29	28480	1901-0049
A16A1CR7	1901-0049	0		DIODE-PWR RECT 50V 750MA DO-29	28480	1901-0049
A16A1CR8	1902-3193	3	1	DIODE-ZNR 13.3V 5% DO-7 PD=.4W TC=+.059%	28480	1902-3193
A16A1CR9	1901-0040	1		DIODE-SWITCHING 30V 50MA 2NS DO-35	28480	1901-0040
A16A1CR10	1901-0040	1		DIODE-SWITCHING 30V 50MA 2NS DO-35	28480	1901-0040
A16A1CR11	1902-0554	4	2	DIODE-ZNR 10V 5% DO-15 PD=1W TC=+.06%	28480	1902-0554
A16A1CR12	1902-0554	4		DIODE-ZNR 10V 5% DO-15 PD=1W TC=+.06%	28480	1902-0554
A16A1CR13				DELETED		
A16A1CR14				DELETED		
A16A1CR15	1901-0040	1		DIODE-SWITCHING 30V 50MA 2NS DO-35	28480	1901-0040
A16A1L2	9140-0154	2	1	COIL-MLD 53.8UH 1% Q=55 .156DX.375LG-NOM	28480	9140-0154
A16A1L3	9140-0029	0	1	COIL-MLD 100UH 10% Q=30 .25DX.313LG-NOM	28480	9140-0029
A16A1Q1	1854-0020	6	3	TRANSISTOR NPN SI TO-8 PD=25W	28480	1854-0020
A16A1Q2	1854-0020	6		TRANSISTOR NPN SI TO-8 PD=25W	28480	1854-0020
A16A1Q3	1853-0001	1	1	TRANSISTOR PNP SI TO-39 PD=600MW	28480	1853-0001
A16A1Q4	1854-0023	9	1	TRANSISTOR NPN SI TO-18 PD=360MW	28480	1854-0023
A16A1Q5	1854-0020	6		TRANSISTOR NPN SI TO-8 PD=25W	28480	1854-0020
A16A1Q6	1854-0003	5	1	TRANSISTOR NPN SI TO-39 PD=800MW	28480	1854-0003
A16A1Q7	1854-0005	7	1	TRANSISTOR NPN 2N708 SI TO-18 PD=360MW	04713	2N708
A16A1Q8	1854-0547	2	1	TRANSISTOR NPN 2N3725 SI TO-5 PD=800MW	01295	2N3725
A16A1Q9	1854-0039	7	2	TRANSISTOR NPN 2N3053S SI TO-39 PD=1W	01928	2N3053S
A16A1Q10	1854-0039	7		TRANSISTOR NPN 2N3053S SI TO-39 PD=1W	01928	2N3053S
A16A1Q11				DELETED		
A16A1Q12				DELETED		
A16A1R1	0757-0942	4	1	RESISTOR 5.6K 2% .125W F TC=0+-100	24546	C4-1/8-T0-5601-G
A16A1R2	0757-0900	4	6	RESISTOR 100 2% .125W F TC=0+-100	24546	C4-1/8-T0-101-G
A16A1R3	0757-0900	4		RESISTOR 100 2% .125W F TC=0+-100	24546	C4-1/8-T0-101-G
A16A1R4	0757-0894	5	1	RESISTOR 56 1% .125W F TC=0+-100	24546	C4-1/8-T0-56R0-G
A16A1R5	0757-0929	7	1	RESISTOR 1.6K 2% .125W F TC=0+-100	24546	C4-1/8-T0-1601-G

See introduction to this section for ordering information
*Indicates factory selected value

Table 6-5. Options 001, 003 Only Replaceable Parts (Cont'd)

Reference Designation	HP Part Number	C D	Qty	Description	Mfr Code	Mfr Part Number
A1θA1R6	0757-0914	0	2	RESISTOR 390 2% .125W F TC=0+-100	24546	C4-1/8-T0-391-G
A1θA1R7	0757-0900	4		RESISTOR 100 2% .125W F TC=0+-100	24546	C4-1/8-T0-101-G
A1θA1R8	0757-0900	4		RESISTOR 100 2% .125W F TC=0+-100	24546	C4-1/8-T0-101-G
A1θA1R9	0757-0346	2	2	RESISTOR 10 1% .125W F TC=0+-100	24546	C4-1/8-T0-10R0-F
A1θA1R10	0757-0948	0	1	RESISTOR 10K 2% .125W F TC=0+-100	24546	C4-1/8-T0-1002-G
A1θA1R11	0757-0914	0		RESISTOR 390 2% .125W F TC=0+-100	24546	C4-1/8-T0-391-G
A1θA1R12	0757-0900	4		RESISTOR 100 2% .125W F TC=0+-100	24546	C4-1/8-T0-101-G
A1θA1R13	2100-1773	2	1	RESISTOR-TRMR 1K 5% WW TOP-ADJ 1-TRN	28480	2100-1773
A1θA1R14	0757-0346	2		RESISTOR 10 1% .125W F TC=0+-100	24546	C4-1/8-T0-10R0-F
A1θA1R15	0757-0907	1	3	RESISTOR 200 2% .125W F TC=0+-100	24546	C4-1/8-T0-201-G
A1θA1R16	0757-0920	8	2	RESISTOR 680 2% .125W F TC=0+-100	24546	C4-1/8-T0-681-G
A1θA1R17	0757-0920	8		RESISTOR 680 2% .125W F TC=0+-100	24546	C4-1/8-T0-681-G
A1θA1R18	0757-0900	4		RESISTOR 100 2% .125W F TC=0+-100	24546	C4-1/8-T0-101-G
A1θA1R19	0757-0907	1		RESISTOR 200 2% .125W F TC=0+-100	24546	C4-1/8-T0-201-G
A1θA1R20	0757-0907	1		RESISTOR 200 2% .125W F TC=0+-100	24546	C4-1/8-T0-201-G
A1θA1T1	9100-2448	7	1	TRANSFORMER TRANSFORMER; EP=18VCT	28480	9100-2448
A1θA1T2	05061-8010	2	1	TRANSFORMER	28480	05061-8010

See introduction to this section for ordering information
*Indicates factory selected value

Table 6-5. Options 001, 003 Only Replaceable Parts (Cont'd)

Reference Designation	HP Part Number	C D	Qty	Description	Mfr Code	Mfr Part Number
A19	05061-6125	3	1	CLOCK DISPLAY ASSEMBLY (OPT 001 ONLY) (SERIES 1740)	28480	05061-6125
A19	05061-6136	6	1	CLOCK DISPLAY ASSEMBLY (OPT 003 ONLY) (SERIES 1740)	28480	05061-6136
	05061-6137	8	1	CABLE ASSEMBLY, CLOCK DISPLAY	28480	05061-6137
	1200-0063	2	2	CONNECTOR-SGL CONT SKT .04-IN-BSC-SZ RND	28480	1200-0063
	1250-0102	5	1	CONNECTOR-RF BNC FEM SGL-HOLE-FR 50-OHM	28480	1250-0102
A19S1	3101-0052	1	1	SWITCH-PB SPST-NO MOM .25A 30VAC BLK-BTN	82389	961
	5020-0176	0	2	INSULATOR FOR SNAP-ON PINS	28480	5020-0176
	05061-2118	4	1	PANEL, CENTER (OPT. 001 ONLY)	28480	05061-2118
	05061-2119	6		PANEL, CENTER (OPT. 003 ONLY)	28480	05061-2119
	05061-2120	9		PLATE, CENTER	28480	05061-2120
	05062-20162	7		WINDOW, DISPLAY	28480	05062-20162
A19A1	05061-6146	7	1	REGULATOR/DRIVE (SERIES 1740)	28480	05061-6146
A19A1C1	0180-2827	5	4	CAPACITOR-FXD 47UF+100-10% 40VDC AL	28480	0180-2827
A19A1C2	0180-2827	5		CAPACITOR-FXD 47UF+100-10% 40VDC AL	28480	0180-2827
A19A1C3	0160-0576	5	6	CAPACITOR-FXD .1UF +-20% 50VDC CER	28480	0160-0576
A19A1C4	0180-0210	6	1	CAPACITOR-FXD 3.3UF+-20% 15VDC TA	56289	150D335X0015A2
A19A1C5	0160-3879	7	3	CAPACITOR-FXD .01UF +-20% 100VDC CER	28480	0160-3879
A19A1C6	0160-0576	5		CAPACITOR-FXD .1UF +-20% 50VDC CER	28480	0160-0576
A19A1C7	0160-0573	2	1	CAPACITOR-FXD 4700PF +-20% 100VDC CER	28480	0160-0573
A19A1C8	0180-0291	3	1	CAPACITOR-FXD 1UF+-10% 35VDC TA	56289	150D105X9035A2
A19A1C9	0160-0576	5		CAPACITOR-FXD .1UF +-20% 50VDC CER	28480	0160-0576
A19A1C10	0180-2827	5		CAPACITOR-FXD 47UF+100-10% 40VDC AL	28480	0180-2827
A19A1C11	0160-0576	5		CAPACITOR-FXD .1UF +-20% 50VDC CER	28480	0160-0576
A19A1C12	0160-3879	7		CAPACITOR-FXD .01UF +-20% 100VDC CER	28480	0160-3879
A19A1C13	0160-0576	5		CAPACITOR-FXD .1UF +-20% 50VDC CER	28480	0160-0576
A19A1C14	0180-2827	5		CAPACITOR-FXD 47UF+100-10% 40VDC AL	28480	0180-2827
A19A1C15	0160-0576	5		CAPACITOR-FXD .1UF +-20% 50VDC CER	28480	0160-0576
A19A1CR1	1902-3234	3	1	DIODE-ZNR 19.6V 5% DO-7 PD=.4W TC=+.073%	28480	1902-3234
A19A1CR2	1901-0040	1	2	DIODE-SWITCHING 30V 50MA 2NS DO-35	28480	1901-0040
A19A1CR3	1902-1286	1	1	DIODE-ZNR 1N5342B 6.8V 5% PD=5W TC=+200%	04713	1N5342B
A19A1CR4	1901-0040	1		DIODE-SWITCHING 30V 50MA 2NS DO-35	28480	1901-0040
A19A1CR5	1901-0693	0	1	DIODE-PWR RECT 1N4934 100V 1A 200NS	04713	1N4934
A19A1F1	2110-0099	4	2	FUSE 1A 125V FAST-BLO .281X.093	28480	2110-0099
A19A1F2	2110-0099	4		FUSE 1A 125V FAST-BLO .281X.093	28480	2110-0099
A19A1L1	49140-0237	2	1		28480	49140-0237
A19A1L2	9100-0537	1	1	COIL 400UH 15% 1.12D-NOM SRF-1MHZ	28480	9100-0537
A19A1Q1	1854-0215	1	2	TRANSISTOR NPN SI PD=350MW FT=300MHZ	04713	2N3904
A19A1Q2	1854-0215	1		TRANSISTOR NPN SI PD=350MW FT=300MHZ	04713	2N3904
A19A1Q3	1853-0314	9	1	TRANSISTOR PNP 2N2905A SI TO-39 PD=600MW	04713	2N2905A
A19A1Q4	1853-0036	2	1	TRANSISTOR PNP SI PD=310MW FT=250MHZ	28480	1853-0036
A19A1R1	0757-0442	9	10	RESISTOR 10K 1% .125W F TC=0+-100	24546	C4-1/8-T0-1002-F
A19A1R2	0757-0280	3	3	RESISTOR 1K 1% .125W F TC=0+-100	24546	C4-1/8-T0-1001-F
A19A1R3	0757-0465	6	2	RESISTOR 100K 1% .125W F TC=0+-100	24546	C4-1/8-T0-1003-F
A19A1R4	0757-0442	9		RESISTOR 10K 1% .125W F TC=0+-100	24546	C4-1/8-T0-1002-F
A19A1R5	0757-0442	9		RESISTOR 10K 1% .125W F TC=0+-100	24546	C4-1/8-T0-1002-F
A19A1R6	0757-0427	0	1	RESISTOR 1.5K 1% .125W F TC=0+-100	24546	C4-1/8-T0-1501-F
A19A1R7	0757-0465	6		RESISTOR 100K 1% .125W F TC=0+-100	24546	C4-1/8-T0-1003-F
A19A1R8	0757-0442	9		RESISTOR 10K 1% .125W F TC=0+-100	24546	C4-1/8-T0-1002-F
A19A1R9	0757-0442	9		RESISTOR 10K 1% .125W F TC=0+-100	24546	C4-1/8-T0-1002-F
A19A1R10	0757-0442	9		RESISTOR 10K 1% .125W F TC=0+-100	24546	C4-1/8-T0-1002-F
A19A1R11	0757-0442	9		RESISTOR 10K 1% .125W F TC=0+-100	24546	C4-1/8-T0-1002-F
A19A1R12	0757-0442	9		RESISTOR 10K 1% .125W F TC=0+-100	24546	C4-1/8-T0-1002-F
A19A1R13	0757-0442	9		RESISTOR 10K 1% .125W F TC=0+-100	24546	C4-1/8-T0-1002-F
A19A1R14	0757-0442	9		RESISTOR 10K 1% .125W F TC=0+-100	24546	C4-1/8-T0-1002-F
A19A1R15	0757-0338	2	1	RESISTOR 1K 1% .25W F TC=0+-100	24546	C5-1/4-T0-1001-F
A19A1R16	0757-0280	3		RESISTOR 1K 1% .125W F TC=0+-100	24546	C4-1/8-T0-1001-F
A19A1R17	0757-0280	3		RESISTOR 1K 1% .125W F TC=0+-100	24546	C4-1/8-T0-1001-F
A19A1R18	0698-8812	7	1	RESISTOR 1 1% .125W F TC=0+-100	28480	0698-8812
A19A1S1	3101-0878	9	1	SWITCH-TGL SUBMIN SPDT 2A 250VAC	28480	3101-0878
A19A1S2	3101-0557	1	2	SWITCH-PB SPST-NO MOM .5A 120VAC	28480	3101-0557
A19A1S3	3101-0557	1		SWITCH-PB SPST-NO MOM .5A 120VAC	28480	3101-0557
A19A1U1	1826-0180	0	1	IC TIMER TTL MONO/ASTBL	04713	MC1455P1
A19A1U2	1826-0428	9	1	IC 3524 MODULATOR 16-DIP-C	01295	SG3524J
				A19A1 MISCELLANEOUS PARTS		
	1251-3955	4	1		28480	1251-3955
	3050-0107	8	1	WASHER-FL MTLC NO. 6 .156-IN-ID	28480	3050-0107
	05061-0085	1	1	BRACKET, SWITCH	28480	05061-0085
	05061-2037	2	3	SPACER, RIVET-ON	28480	05061-2037

See introduction to this section for ordering information
*Indicates factory selected value

Table 6-5. Options 001, 003 Only Replaceable Parts (Cont'd)

Reference Designation	HP Part Number	C D	Qty	Description	Mfr Code	Mfr Part Number
A19A2	05061-6145	5	1	BOARD ASSEMBLY, DISPLAY (SERIES 1740)	28480	05061-6145
A19A2C1	0160-3879	7		CAPACITOR-FXD .01UF +-20% 100VDC CER	28480	0160-3879
A19A2DS1	1990-0452	6	6	DISPLAY-NUM-SEG 1-CHAR .3-H	28480	5082-7731, CAT C-E
A19A2DS2	1990-0452	6		DISPLAY-NUM-SEG 1-CHAR .3-H	28480	5082-7731, CAT C-E
A19A2DS3	1990-0452	6		DISPLAY-NUM-SEG 1-CHAR .3-H	28480	5082-7731, CAT C-E
A19A2DS4	1990-0452	6		DISPLAY-NUM-SEG 1-CHAR .3-H	28480	5082-7731, CAT C-E
A19A2DS5	1990-0452	6		DISPLAY-NUM-SEG 1-CHAR .3-H	28480	5082-7731, CAT C-E
A19A2DS6	1990-0452	6		DISPLAY-NUM-SEG 1-CHAR .3-H	28480	5082-7731, CAT C-E
A19A2Q1	1853-0058	8	6	TRANSISTOR PNP SI PD=300MW FT=200MHZ	07263	832248
A19A2Q2	1853-0058	8		TRANSISTOR PNP SI PD=300MW FT=200MHZ	07263	832248
A19A2Q3	1853-0058	8		TRANSISTOR PNP SI PD=300MW FT=200MHZ	07263	832248
A19A2Q4	1853-0058	8		TRANSISTOR PNP SI PD=300MW FT=200MHZ	07263	832248
A19A2Q5	1853-0058	8		TRANSISTOR PNP SI PD=300MW FT=200MHZ	07263	832248
A19A2Q6	1853-0058	8		TRANSISTOR PNP SI PD=300MW FT=200MHZ	07263	832248
A19A2R1	0698-7284	5	1	RESISTOR 100K 1% .05W F TC=0+-100	24546	C3-1/8-T0-1003-G
A19A2R2	0698-7244	7	7	RESISTOR 2.15K 1% .05W F TC=0+-100	24546	C3-1/8-T0-2151-G
A19A2R3	0698-7244	7		RESISTOR 2.15K 1% .05W F TC=0+-100	24546	C3-1/8-T0-2151-G
A19A2R4	0698-7244	7		RESISTOR 2.15K 1% .05W F TC=0+-100	24546	C3-1/8-T0-2151-G
A19A2R5	0698-7244	7		RESISTOR 2.15K 1% .05W F TC=0+-100	24546	C3-1/8-T0-2151-G
A19A2R6	0698-7244	7		RESISTOR 2.15K 1% .05W F TC=0+-100	24546	C3-1/8-T0-2151-G
A19A2R7	0698-7244	7		RESISTOR 2.15K 1% .05W F TC=0+-100	24546	C3-1/8-T0-2151-G
A19A2R8	0698-7244	7		RESISTOR 2.15K 1% .05W F TC=0+-100	24546	C3-1/8-T0-2151-G
A19A2R9	0698-7202	7	7	RESISTOR 38.3 1% .05W F TC=0+-100	24546	C3-1/8-T00-38R3-G
A19A2R10	0698-7202	7		RESISTOR 38.3 1% .05W F TC=0+-100	24546	C3-1/8-T00-38R3-G
A19A2R11	0698-7202	7		RESISTOR 38.3 1% .05W F TC=0+-100	24546	C3-1/8-T00-38R3-G
A19A2R12	0698-7202	7		RESISTOR 38.3 1% .05W F TC=0+-100	24546	C3-1/8-T00-38R3-G
A19A2R13	0698-7202	7		RESISTOR 38.3 1% .05W F TC=0+-100	24546	C3-1/8-T00-38R3-G
A19A2R14	0698-7202	7		RESISTOR 38.3 1% .05W F TC=0+-100	24546	C3-1/8-T00-38R3-G
A19A2R15	0698-7202	7		RESISTOR 38.3 1% .05W F TC=0+-100	24546	C3-1/8-T00-38R3-G
A19A2RP1	1810-0055	5	1	NETWORK-RES 9-SIP10.0K OHM X 8	28480	1810-0055
A19A2RP2	1810-0151	2	1	NETWORK-RES 7-SIP10.0K OHM X 6	91637	CSP07C07-103J
A19A2U1	1820-2126	6	1	IC MISC PMOS	27014	MM5313N(76+)
A19A2U2	1858-0023	7	1	TRANSISTOR ARRAY	01928	CA3081E
A19A2U3	1820-1146	8	1	IC BFR CMOS NON-INV HEX	01928	CD4050AF
	1200-0496	5	1	SOCKET,IC 14-PIN	28480	1200-0496

See introduction to this section for ordering information
*Indicates factory selected value

Table 6-6. Manufacturers Code List

Mfr No.	Manufacturer Name	Address	Zip Code
H9027	SCHURTER A G H	LUZERN, SW	
01002	GE CO INDUSTRIAL & POWER CAP DEPT	HUDSON FALLS, NY	12839
01221	ALLEN-BRADLEY CO	MILWAUKEE, WI	53204
01295	TEXAS INSTR INC SEMICOND CMPNT DIV	DALLAS, TX	75222
0192B	RCA CORP SOLID STATE DIV	SOMERVILLE, NJ	08876
02660	AMPHENOL SALES DIV OF BUNKER-RAMO	BROADVIEW, IL	60153
03508	GE CO SEMICONDUCTOR PROD DEPT	SYRACUSE, NY	13201
03888	KDI PYROFILM CORP	WHIPPANY, NJ	07981
04713	MOTOROLA SEMICONDUCTOR PRODUCTS	PHOENIX, AZ	85062
06001	GE CO ELEK CAP & BAT PROD DEPT	IRMO, SC	29063
07263	FAIRCHILD SEMICONDUCTOR DIV	MOUNTAIN VIEW, CA	94042
18324	SIGNETICS CORP	SUNNYVALE, CA	94086
19701	MEPCO/ELECTRA CORP	MINERAL WELLS, TX	76067
20940	MICRO-OHM CORP	EL MONTE, CA	91731
24546	CORNING GLASS WORKS (BRADFORD)	BRADFORD, PA	16701
27014	NATIONAL SEMICONDUCTOR CORP	SANTA CLARA, CA	95051
28480	HEWLETT-PACKARD CO CORPORATE HQ	PALO ALTO, CA	94304
32997	BOURNS INC TRIMPOT PROD DIV	RIVERSIDE, CA	92507
33095	SPECTRUM CONTROL INC	FAIRVIEW, PA	16415
52763	STETTNER-TRUSH INC	CAZENOVIA, NY	13035
53021	SANGAMO ELECTRIC CO	SPRINGFIELD, IL	62702
56289	SPRAGUE ELECTRIC CO	NORTH ADAMS, MA	01247
72136	ELECTRO MOTIVE CORP SUB IEC	WILLIMANTIC, CT	06226
75042	TRW INC PHILADELPHIA DIV	PHILADELPHIA, PA	19108
82389	SWITCHCRAFT INC	CHICAGO, IL	60630
84411	TRW CAPACITOR DIV	OGALLALA, NE	69153
91637	DALE ELECTRONICS INC	COLUMBUS, NE	68601

SECTION VII

MANUAL CHANGES AND OPTIONS

7-1. MANUAL CHANGES

7-2. This manual applies directly to Model 5065A Rubidium Vapor Frequency Standard having serial number prefix 1104.

7-3. NEWER INSTRUMENTS

7-4. As changes are made, newer instruments may have serial prefix numbers not listed in this manual. The manuals for these instruments will be supplied with an additional "manual changes" sheet containing the required information; contact the nearest Hewlett-Packard Sales and Service Office for information if this sheet is missing.

7-5. OLDER INSTRUMENTS

7-6. This manual with changes listed in Table 7-1 applies to Model 5065A Rubidium Vapor Frequency Standard having serial number prefix 968 and below.

7-7. OPTIONS

7-8. There is one option available; Option 001 Time Standard. Some instruments were Option 002 or Option 003.

a. Option 002: (Standby Power Supply) Add Figure 7-1 and Table 7-2 to manual. Perform manual changes listed in Paragraph 7-5. Applicable to instrument serial prefix 916 and below.

b. Option 003: (Combines Option 001, 002) Add Figure 7-1, and Table 7-2 to manual. Perform manual changes listed in Paragraph 7-5.

7-9. Option 001 Time Standard

7-10. For Option 001, see Figures 8-13 to 8-15.

7-11. Three changes that alter a particular assembly series number but not the instrument series number are located at the end of this section. They are:

Change A: (Option 001 A16 Series 1532 Only)
Change B: (Option 001 A5 Series 1840 Only)
Change C: (Option 001 A5 Series 723 Only)

CHANGE 1 (820-):

Figure 8-18, A8 Phase Detector Assembly:
Delete R50 10K resistor. Make appropriate changes to Section VI tables

Table 7-1. Manual Changes

Serial Prefix No.	Make Manual Changes
820	1 through 24
836	2 through 24
840	3 through 24
848	4 through 24
852	5 through 24
902	6 through 24
916	7 through 24
928	8 through 24
940	9 through 24
956	10 through 24
956	11 through 24
964	12 through 24
968	13 through 24
1104	14 through 24
1220	15 through 24
1320	16 through 24
1340	17 through 24
1416	18 through 24
1420	19 through 24
1532A00631 and Below	20 through 24
1532A00632 through 1532A00790	21 through 24
1736	22 through 24
1820	23 through 24
1840	24 only.

Figure 8-16, A6 1 MHz Divider Assembly:
Change L2 to 17 μh 9140-0107. Make appropriate changes to Section VI tables

Figure 8-25, A13 Buffer Amplifier Assembly:
Change A13A1R12 to 910 ohm 0757-0923.
Change A13A1Q1, Q2, Q3 to 1854-0092 (2N3563). Make appropriate changes to Section VI tables.

Figure 7-2, A2 Battery Charger Assembly (Option 002):
Change CR7 to 31.6 V 1902-3290. Make appropriate changes to Section VII tables.

Figure 8-27, A15 Voltage Regulator Assembly:
Change R16 to 100 ohms 0757-0900. Make appropriate changes to Section VI tables.

Figure 8-6, (Wiring Diagram 2 of 3):
Delete R7 from A17(6) and ground
Make appropriate changes to Section VI tables.
Delete R4. Make appropriate changes to Section VI tables.

Figure 8-11, A3 Multiplier Assembly:
Delete L1, 2, 4, 3 from J1, J2, J3, J5 BNC's.
Add jumper wires in place of deleted coils.
Make appropriate changes to Section VI tables.

Figure 7-2, A2 Battery Charger (Option 002):
Change BT1 to 24.0 V, 1420-0009.
Make appropriate changes to Section VII tables.

CHANGES 2 (836-):

Figure 8-17, A7 AC Amplifier Assembly:
Change A7A1C9 to 1.0 mf 0160-0127.
Change A7A1R17 to 11K-0757-0949.
Change A7A1R18 to 10K-0757-0948.
Make appropriate changes to Section VI tables.

Figure 8-8, A1 Synthesizer Assembly:
Delete C47, CR41.
Add R96, 1K-0757-0924 in place of CR41.
Change Q17, Q19 to 1854-0005 (2N708).
Make appropriate changes to Section VI tables.

CHANGE 3 (840-):

Table 6-2, A3 60 MHz Multiplier Assembly:
Change A3A1T1 to 00105-8003.

Table 6-2, A13 Buffer Amplifier Assembly:
Change A13A1T1 to 00105-8003.

Figure 7-1, A2 Battery Charger Assembly (Option 002):
Change Q5, Q6 to 1854-0003.
Change CR11 to 1902-3224 (17.8 V).
Change CR15 to 1902-3104 (5.62 V).
Add CR14 between CR15-R27 junction and Q11 base (anode to A11).
Make appropriate changes to Table 7-2.

CHANGE 4 (848-):

Figure 8-11, A3 Multiplier Assembly:
Change Q1 to 1854-0092.
Change Q2, Q5, Q6, Q8 to 1855-0081.
Change Q4 to 1854-0060.
Change Q7 to 1853-0015.
Change C3 to 91 pf.
Make appropriate changes to Section VI tables.

Figure 8-25, A13 Buffer Amplifier:
Change C7 to 100 pf. Make appropriate changes to Section VI tables.

Figure 8-9, A1 Synthesizer Assembly:
Delete R97, 98, 99. Make appropriate changes to Section VI tables.

CHANGE 5 (852-):

Figure 8-27, A15 Voltage Regulator Assembly:
Delete C12.
Make appropriate changes to Section VI tables.

CHANGE 6 (902-):

Figure 8-9, A1 Synthesizer Assembly:
Change R19 to R:Fixed:2K. Make appropriate changes to Section VI tables.

Table 6-2, A14 Logic Assembly:
Change CR13 to 1884-0003.

Table 7-2, A2 Battery Charger Assembly (Option 002):
Change CR8 to 1884-0003.

CHANGE 7 (916-):

Page 6-7, 6-8, Table 6-2, A4:
Replace A4 portion of Table 6-1 with Table 7-3.

Page 8-18, 8-19, Figure 8-12:
Replace A4 related text, Component locator and Figure 8-12 with A4, 100 kHz text in Section VII and with Figures 7-3, 7-4, and 7-5.

Page 7-4, Table 7-2:
Change for A2 Battery Charger, Option 002 Board Assembly only (Series No. 916 to 904).

Page 7-4, Table 7-2:
Change A2R12 to 0811-2586, R:Fxd w.w. 910 OHMS, 3%, 2W.
Change A2R13 to 0811-2587, R:Fxd w.w. 4.1 OHMS, 3%, 2W.
Change A2R18 to 0757-0948, R:Fxd met flm, 10K OHM, 2%, ¼W.

Page 6-23, Table 6-3, A12:
Change 05065-6074 to 5065-6030.

Page 6-9, Table 6-2, A7:
Change A7J1 to 1250-0258.

Page 6-5, Table 6-2, A3:
Change A3, 0565-6078 to 05065-6008.
Change A3J4 to 1250-0258.
Change A3J7 to 1250-0258.
Change A3J8 to 1250-0258.

Page 6-16, Table 6-2:
Change W4 to 05065-6035.

Figure 7-2
A2 BATTERY CHARGER ASSEMBLY

(See Page 7-3)

Figure 7-1. Battery Charger Assy A2 Option 002

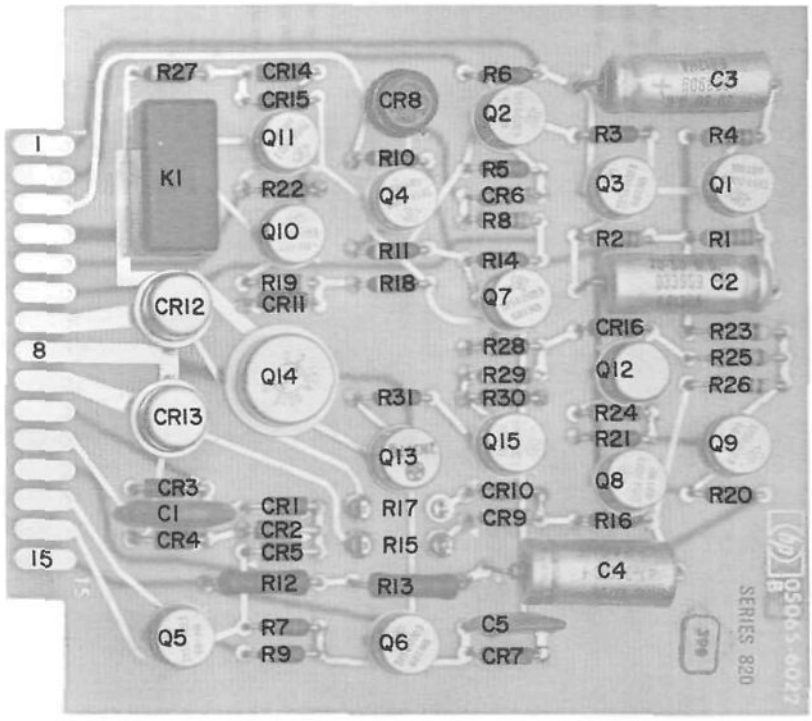

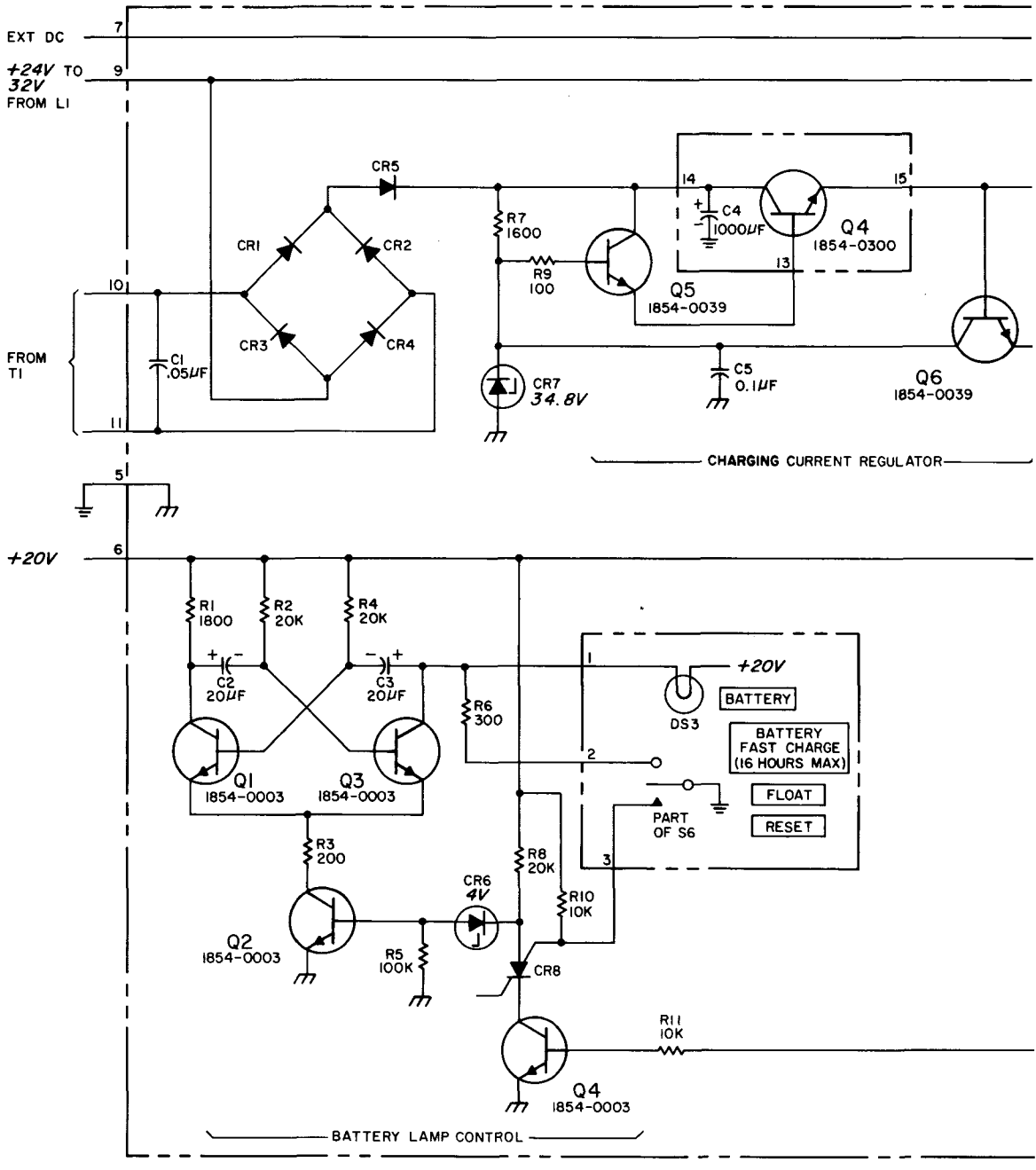

NOTES

1. REFERENCE DESIGNATIONS WITHIN THIS ASSEMBLY ARE ABBREVIATED. ADD ASSEMBLY NUMBER TO ABBREVIATION FOR COMPLETE DESCRIPTION.
2. UNLESS OTHERWISE INDICATED:
   RESISTANCE IN OHMS;
   CAPACITANCE IN PICOFARADS;
3. ASTERISK (*) INDICATES SELECTED COMPONENT, AVERAGE VALUES SHOWN

A2 BATTERY CHARGER ASSEMBLY (05065-6022) (NOTE 1) SERIES 964

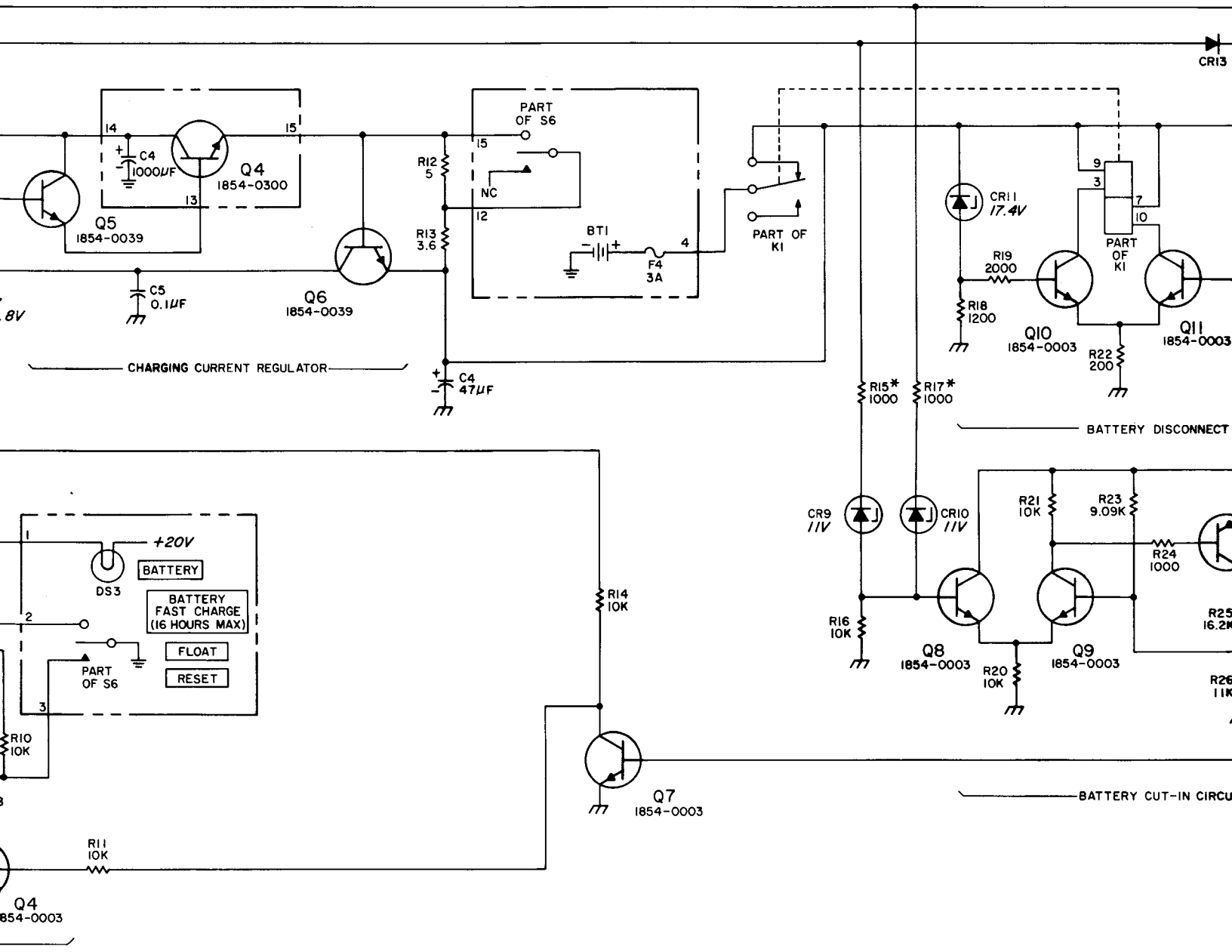

REFERENCE DESIGNATIONS

NO PREFIX	A2
BT1	
C4	C1-5 CR1-16
DS3	
F4	
Q4	K1 Q1-15 R1-31
S6	S1

DELETED:
CR12, 14

THIN THIS
ADD
VIATION

:

S:

TED
SHOWN

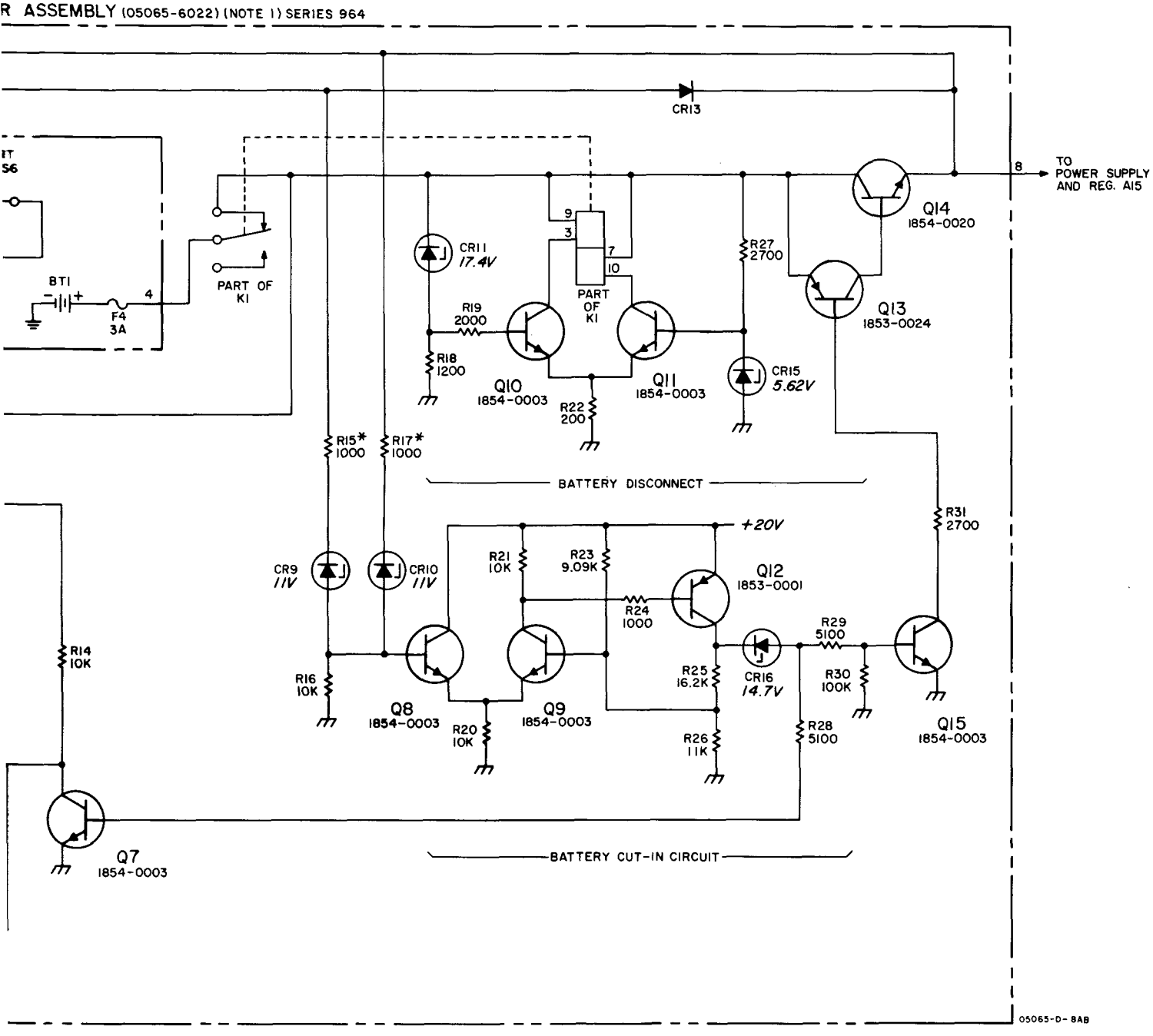

REFERENCE DESIGNATIONS

NO PREFIX	A2
BT1	
C4	C1-5 CR1-16
DS3	
F4	K1
Q4	Q1-15
S6	R1-31 S1

DELETED:
CR12, 14

Figure 7-2. A2 Battery Charger Assembly

CHANGE 8 (928-):

Page 8-5, Figure 8-4:
Delete T.E.D device and P17/J17 of A12 and connections going to Q1, A15(5).

Page 8-7, Figure 8-6:
Delete CR3, P17/J17 and T.E.D. device.
Connect Q1 emitter directly to A15(5) and label wire WHT-BLK-BLU.

Page 8-10, UNIT THEORY OF OPERATION:
Replace "PRESET DIVIDER TEXT" and "POWER SUPPLY" text with Paragraph 7-11 through 7-16, and Synthesizer Timing Diagram and Thumbwheel Switch Section.

Page 8-11, Figure 8-8:
Replace Figure 8-8 with Figure 7-6.

Page 8-13, Figure 8-9:
Replace Figure 8-9, component locator and waveforms with Figures 7-7, 7-8, and 7-9.

Page 8-15, Figure 8-10:
Replace Figure 8-10 and component locator with Figure 7-10 and 7-11.

Page 8-43, Figure 8-14:
Delete T.E.D device and P17/J17 information from A12 R.V.F.R.

Pages 6-3, 6-4, 6-5, Table 6-2:
Replace A1 portion of Table 6-2 with Table 7-4.

Page 5-15:
Add Tables 7-5, 7-6, 7-7, and 7-8.

Page 6-15, Table 6-2:
Delete CR3, J17.

CHANGE 9 (940):

Page 8-45, Figure 8-25, A12 RVFR Assembly:
Change A12A1C3 to 10 pf.
Change A12A1C4 to 5.6 pf.

Page 6-23, Table 6-3, A12 Parts List:
Change A12A1C3 to 0160-2199, C:Fxd Mica 10 pf 5%.
Change A12A1C4 to 0160-2251, C:Fxd Cer. 5.6 -.25 pf Vdc w.

CHANGE 10 (956):

Page 8-29, Figure 8-17, A7 Assembly:
Replace Figure 8-17 with Figure 7-13, Page 7-31.
Replace A7 text on Page 8-28 with Page 7-27.
Replace text and component locator on Page 8-29 with Page 7-29 (includes Figure 7-12).

Pages 6-9, 6-10, Table 6-2, A7 Parts List:
Replace A7 parts list on those pages with contents of Table 7-9, Pages 7-33 and 7-35.

CHANGE 11 (960):

Page 1-2, Table 1-1:
Change AC POWER CABLE to HP Part No. 05061-6091.

Page 1-2, Table 1-2:
Change Standby Power Supply description test line to 115/230 Vac ±10% 50-400 Hz.

Page 2-2, Table 2-2:
Add CLOCK, 4 pin male (J7); Connector HP Part 1251-0128; Mating Connector HP Part No. 1251-0127; Mating Connector Descriptin 4-pin Male plug.

Change AC LINE, 3-pin make jack (J8) Connector HP Part No. to 1251-0146 and Mating Connector HP Part No. to 1251-0257.

Page 6-15, Table 6-2:
Change C5A, B to 0160-3043, C:FXD CER 2 x .005 UF 250V
Add J6, 1250-0140, Connector BNC.
Add J7, 1251-0128, Connector female 4 contact.
Change J8 to 1251-0146, Connector 3-pin male.
Add F3, Fuse 2110-0001, Fuse: 1A, 250V.
F3, Fuseholder 1400-0084, Extractor Post-type.
Change F1 to 2110-0001.
Change DS1 to 1450-0113, Lampholder: Red Lens.
Change S1 to 3101-0033.

Page 6-16, Table 6-2:
Add W8 05065-6039, Cable Assy: Rear Panel to A4.
Add W8 1250-0050, Nut:Clamp.
Add W8 1250-0051, Pin: Connector.
Add W8 8120-0229, Cable:Coax 50-OHM, RG-188A/U.
Change ac power cable (under misc.) to 114B-16A.

Page 7-5, Table 7-2:
Change A3DS3 to 1450-0113, Lampholder: Red Lens.

Page 8-3, Figure 8-2, Block Diagram:
Change DS1, Integrator Limit color to Red.
Change DS3, Battery Lamp color to Red.
Change DS2, Continuous Operation Lamp color to Amber.
Add Following J6 Figure to A4 Block:

Table 7-2. Battery Charger Replaceable Parts

Reference Designation	HP Part Number	Qty	Description	Mfr Code	Mfr Part Number
A2	05065-6068	1	STANDBY POWER SUPPLY	28480	05065-6068
A2			FOR OPTION 02 ONLY		
A2	05065-0026	1	HOLDER:BATTERY	28480	05065-0026
A2	05065-6062	1	CABLE ASSY:BATTERY	28480	05065-6062
A2	05065-6022	1	BOARD ASSY:CHARGER	28480	05065-6022
A2	05065-2034	1	BOARD:BLANK PC	28480	05065-2034
A2BT1	1420-0066	1	BATTERY:RECHARGEABLE 25.2VOLTS	28480	1420-0066
A2C1	0150-0052	3	C:FXD CER 0.05 UF 20% 400VDCW	56289	33C17A
A2C2	0180-0049	2	C:FXD ELECT 20 UF +75-10% 50VDCW	56289	30D206G050CC2-DSM
A2C3	0180-0049		C:FXD ELECT 20 UF +75-10% 50VDCW	56289	30D206G050CC2-DSM
A2C4	0180-0097	1	C:FXD TANT. 47 UF 10% 35VDCW	56289	150D476X9035S2-DYS
A2C5	0150-0121	1	C:FXD CER 0.1 UF +80-20% 50VDCW	56289	5C50B1S-CML
A2CR1	1901-0026	5	DIODE:SILICON 0.75A 200PIV	04713	SR1358-8
A2CR2	1901-0026		DIODE:SILICON 0.75A 200PIV	04713	SR1358-8
A2CR3	1901-0026		DIODE:SILICON 0.75A 200PIV	04713	SR1358-8
A2CR4	1901-0026		DIODE:SILICON 0.75A 200PIV	04713	SR1358-8
A2CR5	1901-0026		DIODE:SILICON 0.75A 200PIV	04713	SR1358-8
A2CR6	1902-3070	1	DIODE:BREAKDOWN 4.22V 5%	04713	SZ10939-74
A2CR7	1902-3290	1	DIODE BREAKDOWN:SILICON 31.6V 5%	28480	1902-3290
A2CR8	1884-0003	1	SWITCH:SILICON CONTROLLED	03508	3N58
A2CR9	1902-3172	2	DIODE BREAKDOWN:11.0V 2%	28480	1902-3172
A2CR10	1902-3172		DIODE BREAKDOWN:11.0V 2%	28480	1902-3172
A2CR11	1902-3224	1	DIODE:BREAKDOWN 17.8V 5% 400MW	28480	1902-3224
A2CR12	1901-0200	2	DIODE:SILICON 100 PIV 3A	02735	1N4998
A2CR13	1901-0200		DIODE:SILICON 100 PIV 3A	02735	1N4998
A2CR14	1901-0025	1	DIODE:SILICON 100MA/1V	07263	FD 2387
A2CR15	1902-3104	1	DIODE:BREAKDOWN 5.62V 5%	04713	SZ10939-110
A2CR16	1902-3203	1	DIODE BREAKDOWN:SILICON 14.7V 5%	28480	1902-3203
A2DS3	2140-0025	1	LAMP:INCANDESCENT 28.0V 0.04 AMPS	08806	327
A2DS3	1450-0114	1	LAMPHOLDER:AMBER LENS	07137	RDL-B3-F3-000
A2K1	0490-0475	1	RELAY:DPDT 28V 2A	99928	LSA-2C-24B
A2Q1	1854-0003	12	TSTR:SI NPN(SELECTED FROM 2N1711)	28480	1854-0003
A2Q2	1854-0003		TSTR:SI NPN(SELECTED FROM 2N1711)	28480	1854-0003
A2Q3	1854-0003		TSTR:SI NPN(SELECTED FROM 2N1711)	28480	1854-0003
A2Q4	1854-0003		TSTR:SI NPN(SELECTED FROM 2N1711)	28480	1854-0003
A2Q5	1854-0003		TSTR:SI NPN(SELECTED FROM 2N1711)	28480	1854-0003
A2Q6	1854-0003		TSTR:SI NPN(SELECTED FROM 2N1711)	28480	1854-0003
A2Q7	1854-0003		TSTR:SI NPN(SELECTED FROM 2N1711)	28480	1854-0003
A2Q8	1854-0003		TSTR:SI NPN(SELECTED FROM 2N1711)	28480	1854-0003
A2Q9	1854-0003		TSTR:SI NPN(SELECTED FROM 2N1711)	28480	1854-0003
A2Q10	1854-0003		TSTR:SI NPN(SELECTED FROM 2N1711)	28480	1854-0003
A2Q11	1854-0003		TSTR:SI NPN(SELECTED FROM 2N1711)	28480	1854-0003
A2Q12	1853-0001	1	TSTR:SI PNP(SELECTED FROM 2N1132)	28480	1853-0001
A2Q13	1853-0024	1	TSTR:SI PNP	80131	2N3778
A2Q14	1854-0020	1	TSTR:SI NPN	28480	1854-0020
A2Q15	1854-0003		TSTR:SI NPN(SELECTED FROM 2N1711)	28480	1854-0003
A2R1	0757-0930	1	R:FXD FLM 1.8K OHM 2% 1/8W	28480	0757-0930
A2R2	0757-0955	3	R:FXD FLM 20K OHM 2% 1/8W	28480	0757-0955
A2R3	0757-0907	2	R:FXD FLM 200 OHM 2% 1/8W	28480	0757-0907
A2R4	0757-0955		R:FXD FLM 20K OHM 2% 1/8W	28480	0757-0955
A2R5	0757-0972	2	R:FXD FLM 100K OHM 2% 1/8W	28480	0757-0972
A2R6	0757-0911	1	R:FXD FLM 300 OHM 2% 1/8W	28480	0757-0911
A2R7	0757-0929	1	R:FXD FLM 1.6K OHM 2% 1/8W	28480	0757-0929
A2R8	0757-0955		R:FXD FLM 20K OHM 2% 1/8W	28480	0757-0955
A2R9	0757-0900	1	R:FXD MET FLM 100 OHM 2% 1/8W	28480	0757-0900
A2R10	0757-0948	7	R:FXD FLM 10K OHM 2% 1/8W	28480	0757-0948
A2R11	0757-0948		R:FXD FLM 10K OHM 2% 1/8W	28480	0757-0948
A2R12	0727-0004	1	R:FXD DEPC 5 OHM 1% 1/2W	28480	0727-0004
A2R13	0683-0365	1	R:FXD COMP 3.6 OHM 5% 1/4W	01121	CB-36G5
A2R14	0757-0948		R:FXD FLM 10K OHM 2% 1/8W	28480	0757-0948
A2R15	0757-0924	3	R:FXD MET FLM 1K OHM 2% 1/8W	28480	0757-0924
A2R16	0757-0948		R:FXD FLM 10K OHM 2% 1/8W	28480	0757-0948
A2R17	0757-0924		R:FXD MET FLM 1K OHM 2% 1/8W	28480	0757-0924
A2R18	0757-0926	1	R:FXD FLM 1.2K OHM 2% 1/8W	28480	0757-0926
A2R19	0757-0931	1	R:FXD FLM 2K OHM 2% 1/8W	28480	0757-0931
A2R20	0757-0948		R:FXD FLM 10K OHM 2% 1/8W	28480	0757-0948
A2R21	0757-0948		R:FXD FLM 10K OHM 2% 1/8W	28480	0757-0948
A2R22	0757-0907		R:FXD FLM 200 OHM 2% 1/8W	28480	0757-0907
A2R23	0757-0288	1	R:FXD MET FLM 9.09K OHM 1% 1/8W	28480	0757-0288
A2R24	0757-0924		R:FXD MET FLM 1K OHM 2% 1/8W	28480	0757-0924
A2R25	0757-0447	1	R:FXD MET FLM 16.2K OHM 1% 1/8W	28480	0757-0447
A2R26	0757-0443	1	R:FXD MET FLM 11.0K OHM 1% 1/8W	28480	0757-0443
A2R27	0757-0948		R:FXD FLM 10K OHM 2% 1/8W	28480	0757-0948
A2R28	0757-0941	2	R:FXD FLM 5.1K OHM 2% 1/8W	28480	0757-0941
A2R29	0757-0941		R:FXD FLM 5.1K OHM 2% 1/8W	28480	0757-0941

See introduction to this section for ordering information

Table 7-2. Battery Charger Replaceable Parts (Continued)

Reference Designation	HP Part Number	Qty	Description	Mfr Code	Mfr Part Number
A2R30	0757-0972		R:FXD FLM 100K OHM 2% 1/8W	28480	0757-0972
A2R31	0757-0934	1	R:FXD FLM 2.7K OHM 2% 1/8W	28480	0757-0934
A2S6	3101-1164	1	SWITCH:TOGGLE DPDT 5A 115V AC	28480	3101-1164

Page 8-7, Figure 8-6:

Figure A

Figure B

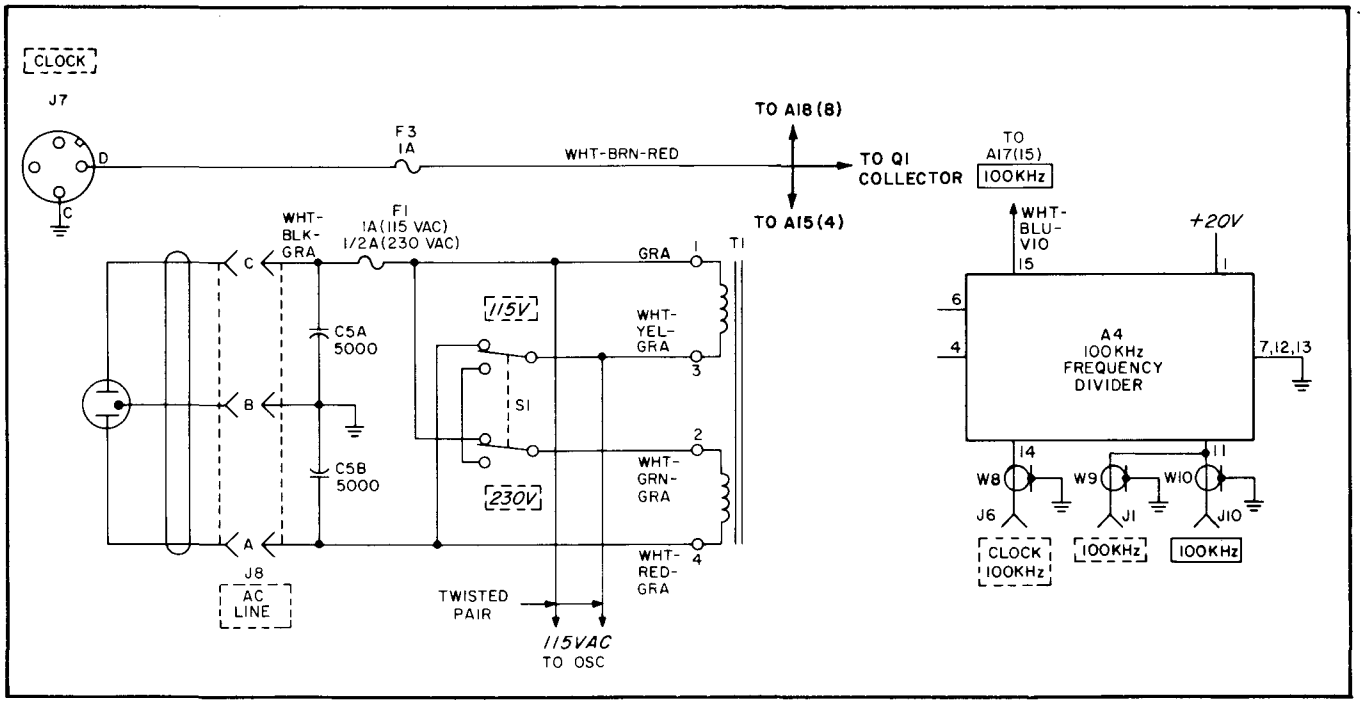

Change input ac wiring, C5A,B values as shown in Figure A.
Add J7, F3 and wire as shown in Figure A.
Add J6, W8 to A4(14) as shown in Figure B.

Page 8-9, Figure 8-7:
Change input ac wiring, C5A,B values as shown in Figure A.
Add J7, F3 and wire as shown in Figure A.
Add J6, W8 to A4(14) as shown in Figure B.

Page 6-3, Table 6-2:
Change A1A1C1 to 0140-0221, F:FXD MICA 220 PF 1% Factory select.

Page 6-4, Table 6-2:
Change A1A1R71 to 0757-0968, R:FXD Met Flm OHM 2%, ⅛W Factory Select.

Page 6-5, Table 6-2:
Change A1A1R85 to 0757-0943, R:Fxd Flm 6.2 Ohm, 2% ⅛W, Factory Select.

Page 8-13, Figure 8-9, A1 Assembly:
Change A1A1C2 to 220 pf.

Page 8-15, Figure 8-10, A1 Assembly:
Change A1A1R71 to 68K.
Change A1A1R85 to 6200.

Page 7-4, Table 7-2, Battery Charger Parts List:
Change A2R18 to 0757-0929, R:Fxd Met Flm 1600 Ohm 2% ⅛W.

Page 7-6, Figure 7-2, A2 Battery Charger:
Change A2R18 to 1600 Ohm.
Delete Series 964 reference at top of Schematic Diagram.

Page 6-10, Table 6-2, A7 Assembly:
Change A7A1C6 to 0160-0166.
Change A7A1C7, C8 to 0160-0163.
Change A7A1C18, to 0160-0166.
Change A7A1C19, 20 to 0161-0163.

CHANGE 12 (964):

Page 8-15, Figure 8-10, A1 Synthesizer Assembly:
Change R87 to 12K Ohm.
Change A1 Series to 964.

Page 6-5, Table 6-2:
Change A1R87 to 0757-0950 R:MET FLM 6200 Ohm 2% ⅛W.

Page 6-7, Table 6-2:
Change A4C3 to -160-2225.
Change A4C10 to 0160-2218.
Change A4C12 to 0140-0182.
Change A4C19 to 0140-0184.
Change A4C21 to0140-0184.

Page 6-15, Table 6-2:
Change S5 to 3100-2402.

CHANGE 13 (968):

Page 8-31, Figure 8-18, A8 PHASE DETECTOR Assembly:
Change A1 to Q3, Q8 to Q11 to 1854-0003.

Page 6-11, Table 6-2:
Change A8Q1 to A8Q3 and A8Q8 to A8Q11 to 1854-0003.

The A4 Module uses regenerative division to divide 1 MHz to 100 kHz as shown. Operation is similar to that of A7 1 MHz Frequency Divider.

Figure 7-3. 100 kHz Regenerative Divider

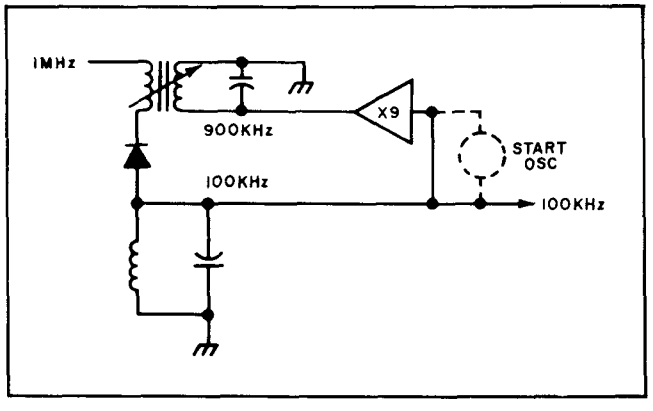

The 100 kHz divider is a regenerative divide-by-ten circuit followed by an amplifier stage. This assembly includes signal-sensing logic to control the divider-start circuit in response to both the 100 kHz output and the dc start signal that comes from A7 1 MHz Frequency Divider. Assume the 1 MHz signal is present at the divider circuit input, but the 100 kHz output has not started. Divider operation requires 100 kHz at the base of Q3, the X9 multiplier. This 100 kHz signal is derived from the output signal once the divider starts. During divider start, the required 100 kHz signal is obtained by converting tuned amplifier A6 into a 100 kHz oscillator by feeding a signal from its output back to its input through FET switch Q5.

The 1 MHz signal input to A4 is amplified by Q1. The input is also coupled through Q2 whose output connects through A4(2) to A5 Digital Divider. The start signal connects from A6 1 MHz Frequency Divider through A4(4) to Q4; Q4 biases Q5 "on" to complete the feedback path for Q7 which then oscillates at 100 kHz.

When the regenerative division process starts, the start circuit is no longer required. A small sample of the 100 kHz output connects to CR3 and CR5 to produce a negative bias to cut off Q7. The resulting increased voltage at Q4 emitter cuts this stage off, which in turn positively biases FET switch "off" to open the start oscillator path. The regenerative dividing process is maintained as long as there is continuity in the 1 MHz input.

Multiplier stage Q3 converts 100 kHz at its base to 900 kHz in its tuned collector circuit. The resulting 900 kHz mixes with the input 1 MHz from T1 in mixing diode CR2. The parallel resonance of L3 and C8, tuned to 100 kHz, traps all undesired frequencies in the mixing product. 100 kHz couples to Q7 to complete the regenative path.

Q9 and Q10 feed the 100 kHz front and rear panel output jacks. Adjustable T3 tunes Q10 for optimum power out. A second 100 kHz output is supplied by clock amplifier Q8 through A4()14). Diode CR5 and C29 in T3 output provide a rectified and filtered dc output for the 100 kHz position of the CIRCUIT CHECK meter.

A4 MAINTENANCE

NORMAL OPERATION

The A4 circuits process the A6 1 MHz output by means of regenerative division to produce 100 kHz. The A4 Assembly starts dividing when both 1 MHz and the dc start signal from A6 are present at A4 inputs. A4 outputs are as follows:

a. 100 kHz to front and rear-panel jacks from A4(11).

b. A buffer amplifier 1 MHz output to A5 Digital Divider Assembly from A4(2).

c. Rectified 100 kHz output to CIRCUIT CHECK meter from A4(15).

d. A separate rear panel CLOCK 100 kHz output from A4(14).

OPERATIONAL CHECK

a. A simple check of A4 operation can be made by observing the CIRCUIT CHECK 100 kHz indication and comparing it with the reference meter readings on the front-panel door. In addition, the rear-panel CLOCK 100 kHz output should be 1 volt rms into 1000 ohms; also, the 1 MHz buffer amplfiier output at A4(2) should be .5 volts rms into 1000 ohms.

b. To check operation of the START AUTO-START switch, set this switch to the center position and momentarily disconnect J4 of A10 Oscillator. Note that with the top cover removed, A10J4 is accessible. Without a 5 MHz input to A6, there is no A6 1 MHz output and consequently no 100 kHz output. With A10J4 reconnected, there should be no 100 kHz output until the START AUTO-START switch is placed at either START or AUTO-START.

c. To check that the 1 MHz output (J1 and J10) outputs are within specifications, proceed as follows:

1) Using the 5065A 5 MHz output as an external time base input to a counter connect the 100 kHz front-panel jack to the counter input and check for 100 kHz ± one count. Disconnect the counter.

2) Connect the front panel 100 kHz jack through a 50-ohm feedthrough to an RF voltmeter. Check for 1.0 to 1.5 volts rms. Disconnect the voltmeter and connect an oscilloscope in its place. Check that the 100 kHz output is a clean undistorted sinewave. Disconnect the oscilloscope.

3) If a distortion check of the 100 kHz output is desired, refer to steps 4 and 5 of Table 5-2, In-Cabinet Performance Check.

TROUBLESHOOTING

NOTE

For troubleshooting or tuning it will be necessary to mount the A4 circuit card on a HP 05065-6064 circuit board extender. Power should be disconnect before this assembly is removed and re-installed.

a. Signal Checks

1) To check Q1, monitor 1 MHz at CR2.

2) To check Q3, short the 1 MHz input at A4(6) and then inject 100 kHz at R15 and R16 (1.0 V rms). Check for 900 kHz (X9) at CR2. If this checks out, leave the 100 kHz connected, remove the short at A4(6), and check for 100 kHz at R17 and R18 junction. If there is no regenerative division, check start circuit of Q4 and Q5. In case the dc start circuits is not working, the start oscillator can be turned on by grounding TP1 to close Q5 switch.

b. Tuning Adjustments

1) Connect a 50-ohm termination to the rear panel 100 kHz output jack.

2) Connect a BNC tee to the front panel 100 kHz output jack. Then connect an electronic counter and RMS voltmeter to the VNC tee. Connect the 5065A 5 MHz output to counter EXT STD INPUT and set counter for external standard operation.

3) Set front panel START-AUTO-START switch to AUTO-START. Tune A4T1, T2, L6, and T3 for maximum indication on the RMS voltmeter. Counter should indicate 1 MHz ± one count.

4) Retune A4T1, T2, L6, and T3 for maximum output. Output level should be between 1.0 and 1.5 volts. This complete the 100 kHz divider tuning.

MODULE REPLACEMENT

When replacing the A4 Assembly after repair or when a new A4 Assembly is installed, the circuit should be completely realigned per the preceeding paragraphs.

Figure 7-5
A4 100 kHz FREQUENCY DIVIDER ASSEMBLY

(See Page 7-11)

Figure 7-4. A4 100 kHz Divider

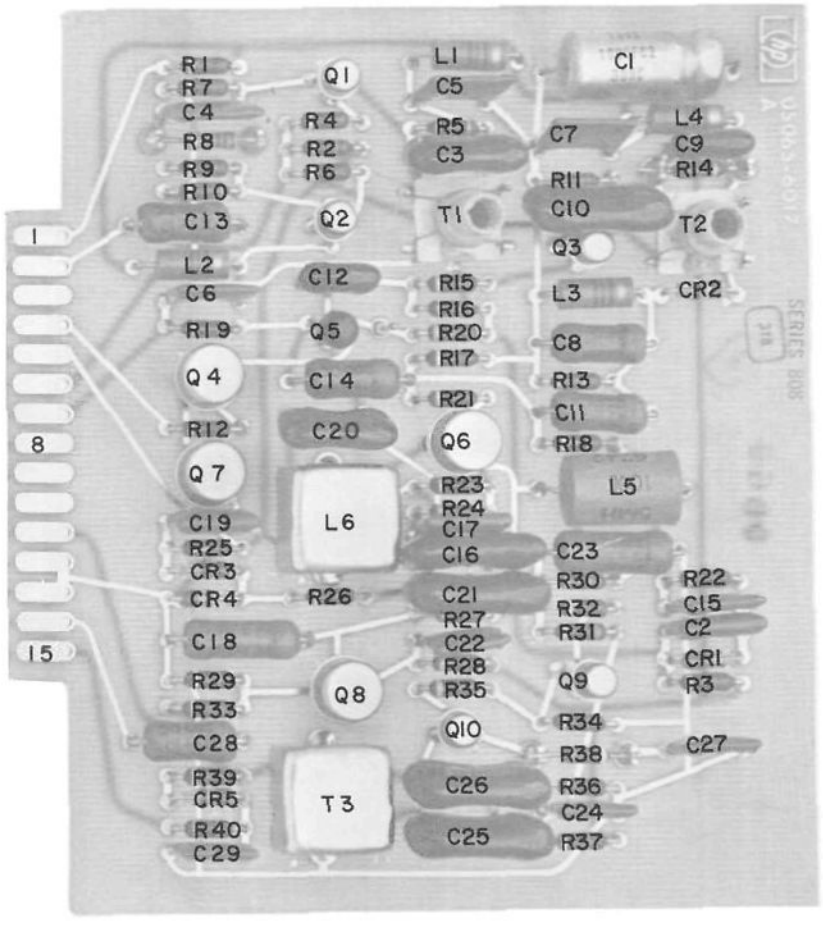



❶ .2 V/cm, 1 μs/cm

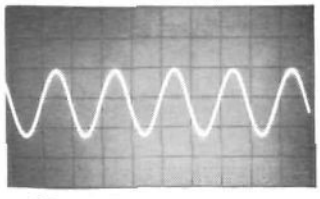

❷ .1 V/cm, 10 μs/cm

5065A: Normal operation unless noted.

Oscilloscope: DC coupled.

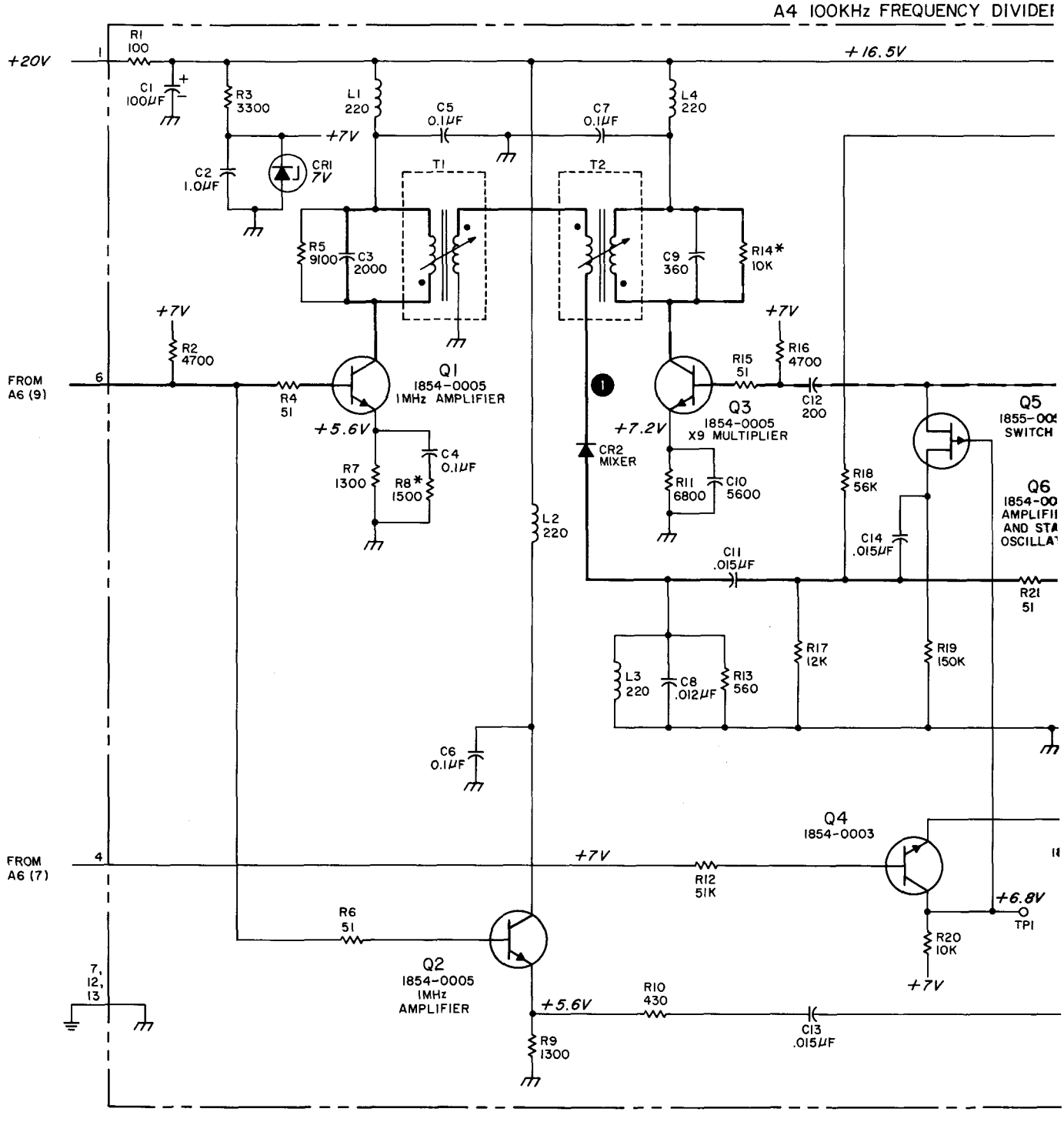
A4 100KHz FREQUENCY DIVIDE
+20V
1
R1
100
C1
100μF
R3
3300
L1
220
C5
0.1μF
C7
0.1μF
L4
220
+16.5V
+7V
C2
1.0μF
CR1
7V
T1
T2
R5
9100
C3
2000
C9
360
R14*
10K
+7V
+7V
R2
4700
FROM
A6 (9)
6
R4
51
Q1
1854-0005
1MHz AMPLIFIER
+5.6V
C4
0.1μF
R7
1300
R8*
1500
L2
220
+7.2V
CR2
MIXER
R15
51
Q3
1854-0005
X9 MULTIPLIER
R16
4700
C12
200
Q5
1855-00
SWITCH
R11
6800
C10
5600
R18
56K
Q6
1854-00
AMPLIFI
AND STA
OSCILLA
C14
.015μF
C11
.015μF
R21
51
L3
220
C8
.012μF
R13
560
R17
12K
R19
150K
C6
0.1μF
Q4
1854-0003
FROM
A6 (7)
4
+7V
R12
51K
+6.8V
TP1
R6
51
Q2
1854-0005
1MHz
AMPLIFIER
R20
10K
+7V
7,
12,
13
+5.6V
R10
430
C13
.015μF
R9
1300

A4 100KHz FREQUENCY DIVIDER ASSEMBLY (05065-6017)(NOTE 1)

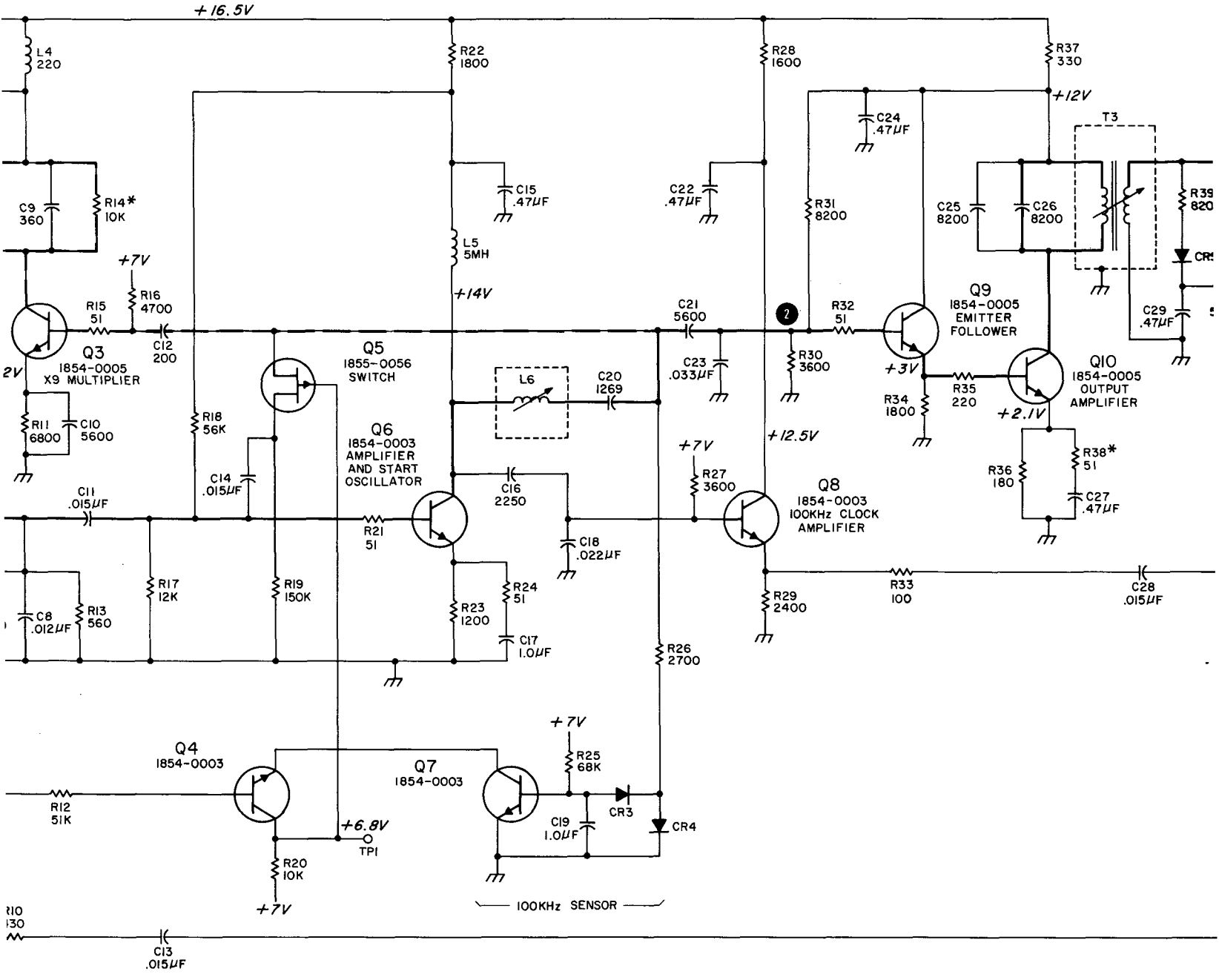

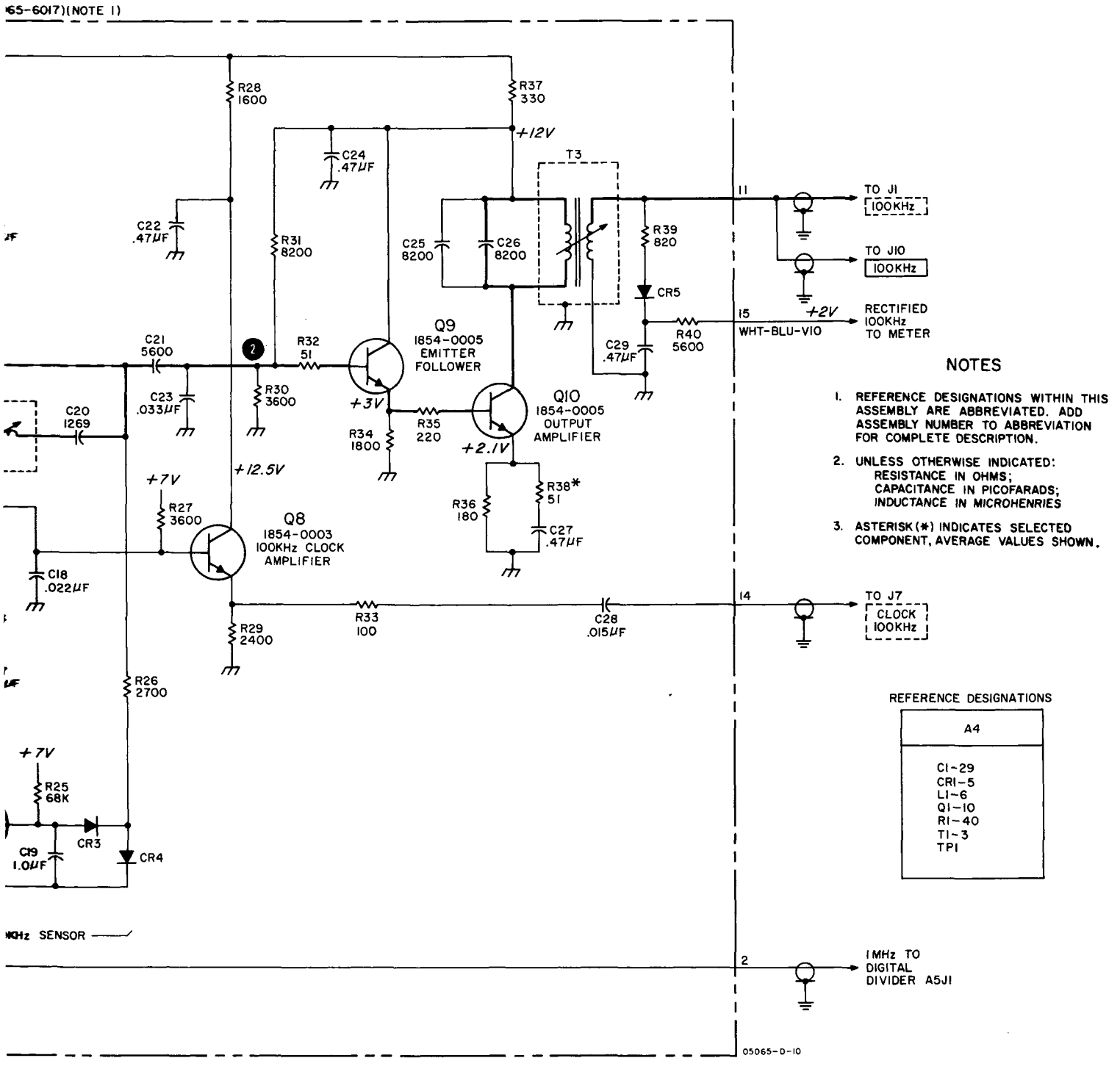

NOTES

1. REFERENCE DESIGNATIONS WITHIN THIS ASSEMBLY ARE ABBREVIATED. ADD ASSEMBLY NUMBER TO ABBREVIATION FOR COMPLETE DESCRIPTION.
2. UNLESS OTHERWISE INDICATED: RESISTANCE IN OHMS; CAPACITANCE IN PICOFARADS; INDUCTANCE IN MICROHENRIES
3. ASTERISK (*) INDICATES SELECTED COMPONENT, AVERAGE VALUES SHOWN.

REFERENCE DESIGNATIONS

A4
C1-29 CR1-5 L1-6 Q1-10 R1-40 T1-3 TP1

Figure 7-5. A4 100 kHz Frequency Divider Assembly

Table 7-3. A4 100 kHz Divider Replaceable Parts

Reference Designation	HP Part Number	Qty	Description	Mfr Code	Mfr Part Number
A4	05065-6017	1	BOARD ASSY:100KHZ DIVIDER	28480	05065-6017
A4	05065-2031	1	BOARD:BLANK PC	28480	05065-2031
A4C1	0180-0113	1	C:FXD ELECT TA 100UF +20-15% 30VDCW	56289	109D107C2030T2
A4C2	0160-0127	3	C:FXD CER 1.0 UF 20% 25VDCW	56289	5C13CS-CML
A4C3	0140-0180	1	C:FXD MICA 2000 PF 2%	28480	0140-0180
A4C4	0150-0121	4	C:FXD CER 0.1 UF +80-20% 50VDCW	56289	5C50BIS-CML
A4C5	0150-0121		C:FXD CER 0.1 UF +80-20% 50VDCW	56289	5C50BIS-CML
A4C6	0150-0121		C:FXD CER 0.1 UF +80-20% 50VDCW	56289	5C50BIS-CML
A4C7	0150-0121		C:FXD CER 0.1 UF +80-20% 50VDCW	56289	5C50BIS-CML
A4C8	0160-0301	1	C:FXD MY 0.012 UF 10% 200VDCW	56289	192P12392-PTS
A4C9	0140-0228	1	C:FXD MICA 360 PF 1% 300VDCW	28480	0140-0228
A4C10	0140-0170	2	C:FXD MICA 5600 PF 5% 300VDCW	28480	0140-0170
A4C11	0160-0194	4	C:FXD MY 0.015 UF 10%	56289	192P15392-PTS
A4C12	0140-0220	1	C:FXD MICA 200 PF 1% 300VDCW	28480	0140-0220
A4C13	0160-0194		C:FXD MY 0.015 UF 10%	56289	192P15392-PTS
A4C14	0160-0194		C:FXD MY 0.015 UF 10%	56289	192P15392-PTS
A4C15	0160-0174	5	C:FXD CER 0.47 UF +80-20% 25VDCW	56289	5C11B7S-CML
A4C16	0140-0235	1	C:FXD MICA 2250PF 1% 300VDCW	14655	RDM20F(2250QF3C
A4C17	0160-0127		C:FXD CER 1.0 UF 20% 25VDCW	56289	5C13CS-CML
A4C18	0160-0162	1	C:FXD MY 0.022 UF 10% 200VDCW	56289	192P22392-PTS
A4C19	0160-0127		C:FXD CER 1.0 UF 20% 25VDCW	56289	5C13CS-CML
A4C20	0160-0954	1	C:FXD MICA 1269 PF 1%	28480	0160-0954
A4C21	0140-0170		C:FXD MICA 5600 PF 5% 300VDCW	28480	0140-0170
A4C22	0160-0174		C:FXD CER 0.47 UF +80-20% 25VDCW	56289	5C11B7S-CML
A4C23	0160-0163	1	C:FXD MY 0.033 UF 10% 200VDCW	56289	192P33392-PTS
A4C24	0160-0174		C:FXD CER 0.47 UF +80-20% 25VDCW	56289	5C11B7S-CML
A4C25	0140-0184	2	C:FXD MICA 8200 PF 1% 100VDCW	28480	0140-0184
A4C26	0140-0184		C:FXD MICA 8200 PF 1% 100VDCW	28480	0140-0184
A4C27	0160-0174		C:FXD CER 0.47 UF +80-20% 25VDCW	56289	5C11B7S-CML
A4C28	0160-0194		C:FXD MY 0.015 UF 10%	56289	192P15392-PTS
A4C29	0160-0174		C:FXD CER 0.47 UF +80-20% 25VDCW	56289	5C11B7S-CML
A4CR1	1902-3125	1	DIODE:BREAKDOWN 6.98V 2% 400MW	28480	1902-3125
A4CR2	1901-0040	4	DIODE:SILICON 30MA 30WV	07263	FDG1088
A4CR3	1901-0040		DIODE:SILICON 30MA 30WV	07263	FDG1088
A4CR4	1901-0040		DIODE:SILICON 30MA 30WV	07263	FDG1088
A4CR5	1901-0040		DIODE:SILICON 30MA 30WV	07263	FDG1088
A4L2	9140-0129		COIL:FXD RF 220 UH	28480	9140-0129
A4L3	9140-0129		COIL:FXD RF 220 UH	28480	9140-0129
A4L4	9140-0129		COIL:FXD RF 220 UH	28480	9140-0129
A4L6	107A-9F	1	COIL ASSY	28480	107A-9F
A4Q1	1854-0005	5	TSTR:SI NPN	80131	2N708
A4Q2	1854-0005		TSTR:SI NPN	80131	2N708
A4Q3	1854-0005		TSTR:SI NPN	80131	2N708
A4Q4	1854-0003	4	TSTR:SI NPN(SELECTED FROM 2N1711)	28480	1854-0003
A4Q5	1855-0056	1	TSTR:SI FET	80131	2N4342
A4Q6	1854-0003		TSTR:SI NPN(SELECTED FROM 2N1711)	28480	1854-0003
A4Q7	1854-0003		TSTR:SI NPN(SELECTED FROM 2N1711)	28480	1854-0003
A4Q8	1854-0003		TSTR:SI NPN(SELECTED FROM 2N1711)	28480	1854-0003
A4Q9	1854-0005		TSTR:SI NPN	80131	2N708
A4Q10	1854-0005		TSTR:SI NPN	80131	2N708
A4R1	0757-0900	2	R:FXD MET FLM 100 OHM 2% 1/8W	28480	0757-0900
A4R2	0757-0940	2	R:FXD FLM 4700 OHM 2% 1/8W	28480	0757-0940
A4R3	0757-0936	1	R:FXD FLM 3.3K OHM 2% 1/8W	28480	0757-0936
A4R4	0757-0893	7	R:FXD FLM 51 OHM 2% 1/8W	28480	0757-0893
A4R5	0757-0947	1	R:FXD FLM 9.1K OHM 2% 1/8W	28480	0757-0947
A4R6	0757-0893		R:FXD FLM 51 OHM 2% 1/8W	28480	0757-0893
A4R7	0757-0927	4	R:FXD FLM 1.3K OHM 2% 1/8W	28480	0757-0927
A4R8	0757-0927		R:FXD FLM 1.3K OHM 2% 1/8W	28480	0757-0927
A4R9	0757-0927		R:FXD FLM 1.3K OHM 2% 1/8W	28480	0757-0927
A4R10	0757-0915	1	R:FXD FLM 430 OHM 2% 1/8W	28480	0757-0915
A4R11	0757-0944	1	R:FXD FLM 6.8K OHM 2% 1/8W	28480	0757-0944
A4R12	0757-0965	1	R:FXD FLM 51K OHM 2% 1/8W	28480	0757-0965
A4R13	0757-0918	1	R:FXD FLM 560 OHM 2% 1/8W	28480	0757-0918
A4R14	0757-0948	2	R:FXD FLM 10K OHM 2% 1/8W	28480	0757-0948
A4R15	0757-0893		R:FXD FLM 51 OHM 2% 1/8W	28480	0757-0893
A4R16	0757-0940		R:FXD FLM 4700 OHM 2% 1/8W	28480	0757-0940
A4R17	0757-0950	1	R:FXD FLM 12K OHM 2% 1/8W	28480	0757-0950
A4R18	0757-0966	1	R:FXD FLM 56K OHM 2% 1/8W	28480	0757-0966
A4R19	0757-0976	1	R:FXD FLM 150K OHM 2% 1/8W	28480	0757-0976
A4R20	0757-0948		R:FXD FLM 10K OHM 2% 1/8W	28480	0757-0948
A4R21	0757-0893		R:FXD FLM 51 OHM 2% 1/8W	28480	0757-0893
A4R22	0757-0930	3	R:FXD FLM 1.8K OHM 2% 1/8W	28480	0757-0930
A4R23	0757-0926	1	R:FXD FLM 1.2K OHM 2% 1/8W	28480	0757-0926
A4R24	0757-0893		R:FXD FLM 51 OHM 2% 1/8W	28480	0757-0893
A4R25	0757-0968	1	R:FXD MET FLM 68K OHM 2% 1/8W	28480	0757-0968

See introduction to this section for ordering information

Table 7-3. A4 100 kHz Divider Replaceable Parts (Continued)

Reference Designation	HP Part Number	Qty	Description	Mfr Code	Mfr Part Number
A4R26	0757-0934	1	R:FXD FLM 2.7K OHM 2% 1/8W	28480	0757-0934
A4R27	0757-0937	2	R:FXD FLM 3.6K OHM 2% 1/8W	28480	0757-0937
A4R28	0757-0929	1	R:FXD FLM 1.6K OHM 2% 1/8W	28480	0757-0929
A4R29	0757-0933	1	R:FXD FLM 2.4K OHM 2% 1/8W	28480	0757-0933
A4R30	0757-0937		R:FXD FLM 3.6K OHM 2% 1/8W	28480	0757-0937
A4R31	0757-0946	1	R:FXD FLM 8.2K OHM 2% 1/8W	28480	0757-0946
A4R32	0757-0893		R:FXD FLM 51 OHM 2% 1/8W	28480	0757-0893
A4R33	0757-0900		R:FXD MET FLM 100 OHM 2% 1/8W	28480	0757-0900
A4R34	0757-0930		R:FXD FLM 1.8K OHM 2% 1/8W	28480	0757-0930
A4R35	0757-0908	1	R:FXD FLM 220 OHM 2% 1/8W	28480	0757-0908
A4R36	0757-0906	1	R:FXD MET FLM 180 OHM 2% 1/8W	28480	0757-0906
A4R37	0757-0912	1	R:FXD MET FLM 330 OHM 2% 1/8W	28480	0757-0912
A4R38	0757-0893		R:FXD FLM 51 OHM 2% 1/8W	28480	0757-0893
A4R39	0757-0922	1	R:FXD FLM 820 OHM 2% 1/8W	28480	0757-0922
A4R40	0757-0942	1	R:FXD FLM 5.6K OHM 2% 1/8W	28480	0757-0942
A4R41	0757-0927		R:FXD FLM 1.3K OHM 2% 1/8W	28480	0757-0927
A4R42	0757-0930		R:FXD FLM 1.8K OHM 2% 1/8W	28480	0757-0930
A4T1	05061-8005	1	TRANSFORMER:1MHZ-4MHZ	28480	05061-8005
A4T2	05061-8008	1	TRANSFORMER:.9MHZ MULTIPLIER	28480	05061-8008
A4T3	107A-9C	1	TRANSFORMER ASSY:100KHZ	28480	107A-9C

See introduction to this section for ordering information

THE PRESET DIVIDER

The preset divider is made up of four decades giving a total dividing capability of 10,000. With each 10,000 counts applied to the divider input, there will be one output pulse. With the addition of the preset capability this divider can be set to divide by any integer (except 1 through 12, due to reset and preset time). Since the divider can be set to divide by any predetermined integer, the system is considered a divide-by-n preset divider. For example: if the divider were to divide-by-2, and 8 would be preset into the decade before the counting sequence starts, and since an 8 count is already in the decade from the preset, it will take only 2 inputs to get 1 output. Conversely, to divide-by-8, 2 counts are preset into the decade prior to counting.

The preset divider delivers an "H" output to the sample circuit at the 9988 count (the sume of the input 5 MHz pulses and the preset information of the four decades). Output stage IC5 remains "on" with an "H" output during count 9989. Count 9990 turns off IC5 and starts a 1.5 μsec reset period. Inhibit gate Q1 and Q2 closes to prevent 5 MHz pulses from entering the decades during the reset and preset peiod. During reset, the decades are restored to "0" count. Following the reset period is a 0.5 μsec preset period. At this time, the thumbwheel switch preset information is fed to the four decades. At the end of the preset period, inhibit gate Q1 and Q2 opens and counting resumes. The counting cycle re-occurs at the 5 MHz/n rate determined by the thumb-wheel setting.

The 5 MHz input signal is shaped by the negative-clamping action of Q1, the first half of inhibit gate Q1 and Q2. The 5 MHz pulse is then applied to first decade IC2(5) which responds to the positive-going transition of the input pulse. The four decades are series connected through inverting amplifiers in IC1, IC3, and IC6, and also through inverting amplifiers Q4 and Q9 as shown in the Synthesizer Timing Diagram on page 7-16. Each decade responds to the positive-going transition of the input pulse at pin 5. Connecting to the "1", "2", "4", and "8" inputs of each decade are the thumbwheel-switch connections through which the decades are preset as required for the desired Synthesizer frequency as derived from Table 3-9. The thumbwheel switch puts in binary information for the desired preset count as can be seen by the wiring diagram for one thumbwheel-switch section shown below. The decade count will therefore be the total of the preset information plus the number of input 5 MHz pulses.

When the count reaches 9000 (preset information plus the number of 5 MHz pulses), final decade IC10 delivers an "8" pulse from IC10(1) to IC9(3) and a "1" pulse from IC10(6) to IC9)5). These inputs activate a NOR gate which delivers a coincidence "9" output (H) pulse at IC9(6). This "H" pulse is inverted by Q11 for the first "1" input to IC5(1).

Table 3-9. Typical Thumbwheel Switch Section

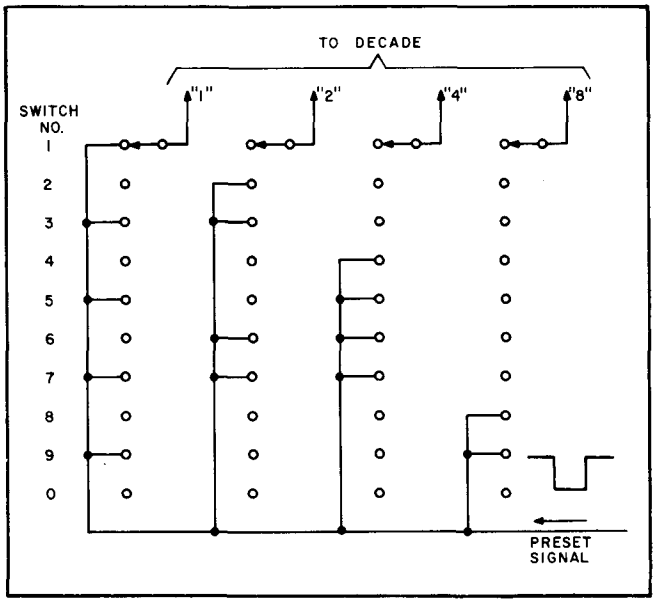

When the count reaches 9900, third decade IC7 delivers an "8" pulse from IC7(1) to IC6(5) and a "1" pulse from IC7(6) to IC6(3). These items activate a NOR gate in IC6 which delivers a coincidence "9" output (H) at IC6(6), which is then inverted by Q8 for the second "L" input to IC5(2).

When the count reaches 9980, second decade IC4 delivers an "8" pulse from IC4(1) through an inverting amplifier in IC3 (IC3-5 to IC3-6) to Q6. Q6 inverts this pulse for the third "L" pulse at IC5(3).

When the count reaches 9988, first decade IC2 delivers an "8" pulse from IC2(1) to IC5(5) for the final "L" pulse which activates IC5. Since IC2 output remains unchanged during count 9989, IC5 remains activated until count 9990. At this count, IC2(1) output goes "H" and turns off NOR gate IC5. Thus, IC5 output pulse is two input counts wide or 0.4 μsec.

Reset one-shot multivibrator IC11 is triggered when NOR gate IC5 closes and provides a 1.5 μsec pulse to Q16, Q7, and preset one-shot multivibrator IC8(9). The signal through Q16 is amplified, inverted, sent to NOR gate (Q13, Q14) and then applied to amplifier Q3. When Q3 collector goes "H", the input gate closes for the 1.5 μsec reset period. The reset signal through Q7 is amplified, inverted, and applied to decade IC4(2).

Decade IC2 count is "0" but IC4, IC7, and IC10 are at the count of "999". The reset pulse into IC4(2) cycles

IC4 to "0" which then applies a count pulse to IC7(5), cycling it to "0". IC5 then applies a count pulse to IC10(5), cycling it to "0". The decades are all reset to "0" awaiting another counting sequence. However, the preset information has not been set into the decades.

The end of the 1.5 μsec reset pulse triggers preset one-shot multivibrator IC8. IC8 output is a 0.5 μsec pulse applied at S1A, Q5, Q10, Q15, and NOR gate Q13, Q14. This NOR gate signal continues to hold the input gate closed for the length of the 0.5 μsec preset pulse. The total input gate close time is 2.0 μsec. This is the total time required to reset and preset the decades. The 0.5 μ sec pulse at S1A, Q5, Q10, and Q15 is applied to the corresponding thumbwheel switch section. Dependent on switch setting, this pulse presets a count into the decades. At the end of the 0.5 μsec preset pulse, input gate Q1, Q2 is open and the dividing function repeats.

POWER SUPPLY CIRCUITS

In addition to +20 V supplied to the Synthesizer, regulated 5.6 V is furnished by zener diode CR1. A special power supply arrangement is provided for the counting decades in the preset divider. Positive supply voltages for decades IC2, IC4, IC7, and IC10 connect to pin 3 and the negative supply voltages to pin 4. Other voltages are applied as follows:

a. Decade IC10 connects between +20 V at R44-R36 and +13.3 V at CR14.

b. Decade IC7 connects between +13.3 V at CR14 and +9.1 V at CR7.

c. Decade IC4 connects between +9.1 V at CR7 and +4.1 V at CR2.

d. Decade IC2 connects between 4.2 V at CR2 and power ground.

This decade power supply arrangement creates different output drive levels. The drive levels are equalized by the biasing action of zener diodes CR8, CR20, and CR25 working with Q7, Q8, and Q11, respectively.

Synthesizer Assembly A1 Timing Diagram

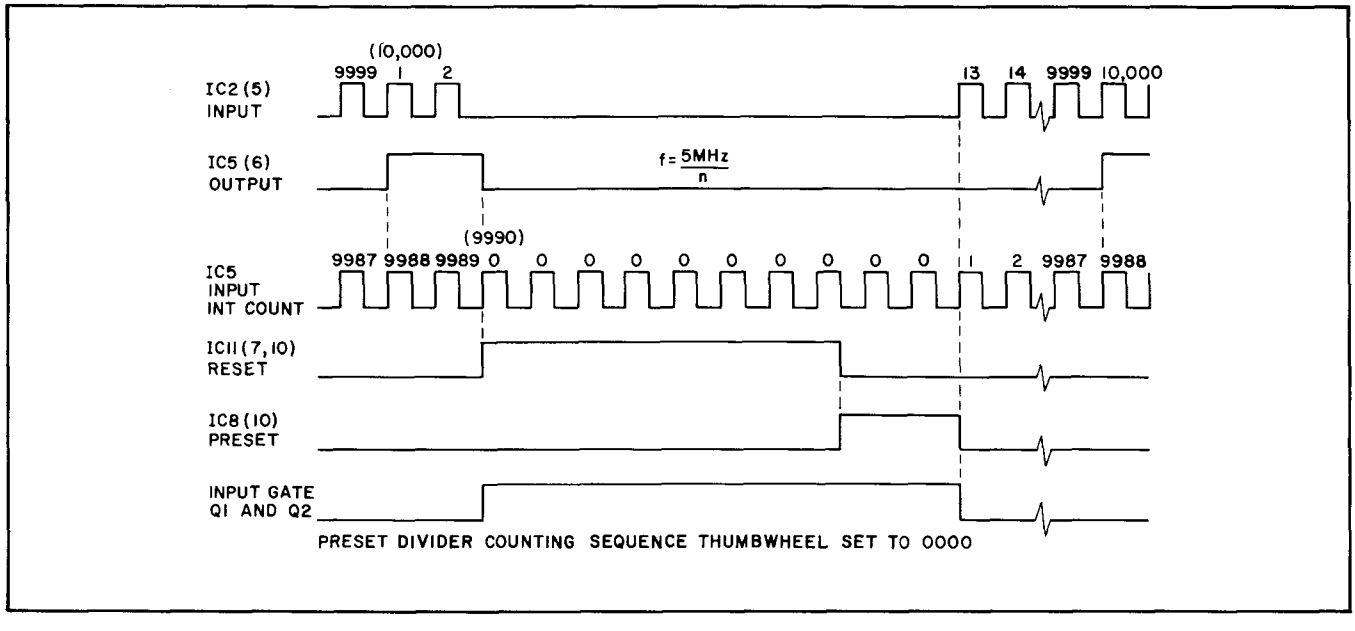

Table 7-4. A1 Synthesizer Assembly Replaceable Parts

Reference Designation	HP Part Number	Qty	Description	Mfr Code	Mfr Part Number
A1	05065-6018	1	MODULE ASSY:SYNTHESIZER	28480	05065-6018
A1S1			CONSISTS OF S1A THRU S1D		
A1S1	3100-2063	1	SWITCH:THUMBWHEEL	28480	3100-2063
A1S2	3101-0033	1	SWITCH:SLIDE DPDT 0.5A 125AC/DC	82389	11A-1009A
A1	0340-0119	1	INSULATED FEED THRU:TEFLON	98291	FT-SM-023-P20
A1	0510-0207	1	NUT:CAPTIVE 4-40 X 0.188 LG	28480	0510-0207
A1	1250-0901	1	CONNECTOR:RF BULKHEAD	15558	1104/D
A1	05060-0007	1	BRACKET:END	28480	05060-0007
A1	05065-0035	1	COVER:SYNTHESIZER	28480	05065-0035
A1	05065-0036	1	CHASSIS:SYNTHESIZER	28480	05065-0036
A1	05065-2032	1	PLATE:END	28480	05065-2032
A1	05065-2043	1	PLATE:END	28480	05065-2043
A1A1	05065-6019	1	BOARD ASSY:SYNTHESIZER	28480	05065-6019
A1A1	05065-2033	1	BOARD:BLANK PC	28480	05065-2033
A1A1C1	0180-0291	4	C:FXD ELECT 1.0 UF 10% 35VDCW	56289	150D105X9035A2-DYS
A1A1C2	0180-0291		C:FXD ELECT 1.0 UF 10% 35VDCW	56289	150D105X9035A2-DYS
A1A1C3	0150-0121	10	C:FXD CER 0.1 UF +80-20% 50VDCW	56289	5C50B1S-CML
A1A1C4	0150-0093	10	C:FXD CER 0.01 UF +80-20% 100VDCW	72982	801-K800011
A1A1C5	0180-0116	4	C:FXD ELECT 6.8 UF 10% 35VDCW	56289	150D685X9035B2-DYS
A1A1C6	0150-0121		C:FXD CER 0.1 UF +80-20% 50VDCW	56289	5C50B1S-CML
A1A1C7	0150-0121		C:FXD CER 0.1 UF +80-20% 50VDCW	56289	5C50B1S-CML
A1A1C8	0150-0093		C:FXD CER 0.01 UF +80-20% 100VDCW	72982	801-K800011
A1A1C9	0180-0116		C:FXD ELECT 6.8 UF 10% 35VDCW	56289	150D685X9035B2-DYS
A1A1C10	0140-0192	1	C:FXD MICA 68 PF 5%	28480	0140-0192
A1A1C11	0160-0127	5	C:FXD CER 1.0 UF 20% 25VDCW	56289	5C13CS-CML
A1A1C12	0150-0093		C:FXD CER 0.01 UF +80-20% 100VDCW	72982	801-K800011
A1A1C13	0180-0116		C:FXD ELECT 6.8 UF 10% 35VDCW	56289	150D685X9035B2-DYS
A1A1C14	0140-0221	1	C:FXD MICA 220 PF 1%	28480	0140-0221
A1A1C15	0160-0127		C:FXD CER 1.0 UF 20% 25VDCW	56289	5C13CS-CML
A1A1C16	0150-0121		C:FXD CER 0.1 UF +80-20% 50VDCW	56289	5C50B1S-CML
A1A1C17	0150-0121		C:FXD CER 0.1 UF +80-20% 50VDCW	56289	5C50B1S-CML
A1A1C18	0140-0160	1	C:FXD MICA 3400 PF 5% 500VDCW	28480	0140-0160
A1A1C19	0140-0196	1	C:FXD MICA 150 PF 5%	72136	RDM15F151J3C
A1A1C20	0140-0225	1	C:FXD MICA 300 PF 1%	28480	0140-0225
A1A1C21	0160-0174	3	C:FXD CER 0.47 UF +80-20% 25VDCW	56289	5C1187S-CML
A1A1C22	0180-0291		C:FXD ELECT 1.0 UF 10% 35VDCW	56289	150D105X9035A2-DYS
A1A1C23	0150-0121		C:FXD CER 0.1 UF +80-20% 50VDCW	56289	5C50B1S-CML
A1A1C24	0180-0291		C:FXD ELECT 1.0 UF 10% 35VDCW	56289	150D105X9035A2-DYS
A1A1C25	0160-0174		C:FXD CER 0.47 UF +80-20% 25VDCW	56289	5C1187S-CML
A1A1C26	0150-0093		C:FXD CER 0.01 UF +80-20% 100VDCW	72982	801-K800011
A1A1C27	0150-0121		C:FXD CER 0.1 UF +80-20% 50VDCW	56289	5C50B1S-CML
A1A1C28	0160-0174		C:FXD CER 0.47 UF +80-20% 25VDCW	56289	5C1187S-CML
A1A1C29	0150-0093		C:FXD CER 0.01 UF +80-20% 100VDCW	72982	801-K800011
A1A1C30	0160-0127		C:FXD CER 1.0 UF 20% 25VDCW	56289	5C13CS-CML
A1A1C31	0160-0127		C:FXD CER 1.0 UF 20% 25VDCW	56289	5C13CS-CML
A1A1C32	0150-0121		C:FXD CER 0.1 UF +80-20% 50VDCW	56289	5C50B1S-CML
A1A1C33	0140-0234	3	C:FXD MICA 500 PF 1%	28480	0140-0234
A1A1C34	0140-0234		C:FXD MICA 500 PF 1%	28480	0140-0234
A1A1C35	0150-0093		C:FXD CER 0.01 UF +80-20% 100VDCW	72982	801-K800011
A1A1C36	0150-0093		C:FXD CER 0.01 UF +80-20% 100VDCW	72982	801-K800011
A1A1C37	0160-0127		C:FXD CER 1.0 UF 20% 25VDCW	56289	5C13CS-CML
A1A1C38	0150-0093		C:FXD CER 0.01 UF +80-20% 100VDCW	72982	801-K800011
A1A1C39	0150-0093		C:FXD CER 0.01 UF +80-20% 100VDCW	72982	801-K800011
A1A1C40	0180-0106	1	C:FXD ELECT 60 UF 20% 6VDCW	28480	0180-0106
A1A1C41	0180-0155	1	C:FXD ELECT 2.2 UF 20% 20VDCW	56289	150D225X0020A2-DYS
A1A1C42	0150-0121		C:FXD CER 0.1 UF +80-20% 50VDCW	56289	5C50B1S-CML
A1A1C43	0140-0234		C:FXD MICA 500 PF 1%	28480	0140-0234
A1A1C44	0180-0116		C:FXD ELECT 6.8 UF 10% 35VDCW	56289	150D685X9035B2-DYS
A1A1C45	0150-0093		C:FXD CER 0.01 UF +80-20% 100VDCW	72982	801-K800011
A1A1C46	0150-0121		C:FXD CER 0.1 UF +80-20% 50VDCW	56289	5C50B1S-CML
A1A1C47	0160-0340	1	C:FXD MICA 600 PF 1%	28480	0160-0340
A1A1CR1	1902-3104	1	DIODE:BREAKDOWN 5.62V 5%	04713	SZ10939-110
A1A1CR2	1902-3070	1	DIODE:BREAKDOWN 4.22V 5%	04713	SZ10939-74
A1A1CR3	1910-0016	16	DIODE:GERMANIUM 100MA/0.85V 60PIV	93332	D2361
A1A1CR4	1910-0016		DIODE:GERMANIUM 100MA/0.85V 60PIV	93332	D2361
A1A1CR5	1910-0016		DIODE:GERMANIUM 100MA/0.85V 60PIV	93332	D2361
A1A1CR6	1910-0016		DIODE:GERMANIUM 100MA/0.85V 60PIV	93332	D2361
A1A1CR7	1902-3149	1	DIODE BREAKDOWN:9.09V 5%	28480	1902-3149
A1A1CR8	1902-0048	1	DIODE:BREAKDOWN 6.81V 5%	04713	SZ10939-134
A1A1CR9	1901-0040	13	DIODE:SILICON 30MA 30WV	07263	FDG1088
A1A1CR10	1910-0016		DIODE:GERMANIUM 100MA/0.85V 60PIV	93332	D2361
A1A1CR11	1910-0016		DIODE:GERMANIUM 100MA/0.85V 60PIV	93332	D2361
A1A1CR12	1910-0016		DIODE:GERMANIUM 100MA/0.85V 60PIV	93332	D2361
A1A1CR13	1910-0016		DIODE:GERMANIUM 100MA/0.85V 60PIV	93332	D2361
A1A1CR14	1902-3139	1	DIODE:BREAKDOWN 8.25V 5%	04713	SZ10939-158

See introduction to this section for ordering information

Table 7-4. A1 Synthesizer Assembly Replaceable Parts (Continued)

Reference Designation	HP Part Number	Qty	Description	Mfr Code	Mfr Part Number
A1A1CR15	1910-0016		DIODE:GERMANIUM 100MA/0.85V 60PIV	93332	D2361
A1A1CR16	1910-0016		DIODE:GERMANIUM 100MA/0.85V 60PIV	93332	D2361
A1A1CR17	1910-0016		DIODE:GERMANIUM 100MA/0.85V 60PIV	93332	D2361
A1A1CR18	1910-0016		DIODE:GERMANIUM 100MA/0.85V 60PIV	93332	D2361
A1A1CR19	1901-0040		DIODE:SILICON 30MA 30WV	07263	FDG1088
A1A1CR20	1902-0025	1	DIODE,BREAKDOWN:10.0V 5% 400 MW	28480	1902-0025
A1A1CR21	1910-0016		DIODE:GERMANIUM 100MA/0.85V 60PIV	93332	D2361
A1A1CR22	1910-0016		DIODE:GERMANIUM 100MA/0.85V 60PIV	93332	D2361
A1A1CR23	1910-0016		DIODE:GERMANIUM 100MA/0.85V 60PIV	93332	D2361
A1A1CR24	1910-0016		DIODE:GERMANIUM 100MA/0.85V 60PIV	93332	D2361
A1A1CR25	1902-3203	1	DIODE BREAKDOWN:SILICON 14.7V 5%	28480	1902-3203
A1A1CR26	1901-0040		DIODE:SILICON 30MA 30WV	07263	FDG1088
A1A1CR27	0122-0013	5	C:VOLTAGE VAR 39 PF 30VDCW	28480	0122-0013
A1A1CR28	1902-3024	1	DIODE:BREAKDOWN 2.87V 5%	04713	SZ10939-26
A1A1CR29	1902-3125	1	DIODE:BREAKDOWN 6.98V 2% 400MW	28480	1902-3125
A1A1CR30	1901-0040		DIODE:SILICON 30MA 30WV	07263	FDG1088
A1A1CR31	1901-0040		DIODE:SILICON 30MA 30WV	07263	FDG1088
A1A1CR32	1901-0050	2	DIODE:SI 200 MA AT 1V	07263	FDA 6308
A1A1CR33	1901-0050		DIODE:SI 200 MA AT 1V	07263	FDA 6308
A1A1CR34	1901-0040		DIODE:SILICON 30MA 30WV	07263	FDG1088
A1A1CR35	1901-0040		DIODE:SILICON 30MA 30WV	07263	FDG1088
A1A1CR36	1901-0040		DIODE:SILICON 30MA 30WV	07263	FDG1088
A1A1CR37	1901-0040		DIODE:SILICON 30MA 30WV	07263	FDG1088
A1A1CR38	1901-0040		DIODE:SILICON 30MA 30WV	07263	FDG1088
A1A1CR39	1901-0040		DIODE:SILICON 30MA 30WV	07263	FDG1088
A1A1CR40	1901-0040		DIODE:SILICON 30MA 30WV	07263	FDG1088
A1A1CR41	1901-0040		DIODE:SILICON 30MA 30WV	07263	FDG1088
A1A1IC1	1820-0080	4	IC:RTL GATE QUAD 2-INPT	28480	1820-0080
A1A1IC2	1820-0079	1	INTEGRATED CIRCUIT:DECADE COUNTER(5MHZ)	28480	1820-0079
A1A1IC3	1820-0080		IC:RTL GATE QUAD 2-INPT	28480	1820-0080
A1A1IC4	1820-0329	3	IC:TTL DECADE COUNTER 5 MHZ MIN.	28480	1820-0329
A1A1IC5	1820-0081	1	INTEGRATED CIRCUIT:DIGITAL 4-INPUT	07263	U5B991129X
A1A1IC6	1820-0080		IC:RTL GATE QUAD 2-INPT	28480	1820-0080
A1A1IC7	1820-0329		IC:TTL DECADE COUNTER 5 MHZ MIN.	28480	1820-0329
A1A1IC8	1820-0315	2	INTEGRATED CIRCUIT	28480	1820-0315
A1A1IC9	1820-0080		IC:RTL GATE QUAD 2-INPT	28480	1820-0080
A1A1IC10	1820-0329		IC:TTL DECADE COUNTER 5 MHZ MIN.	28480	1820-0329
A1A1IC11	1820-0315		INTEGRATED CIRCUIT	28480	1820-0315
A1A1L1	9100-1618	1	COIL:MOLDED CHOKE 5.60 UH	28480	9100-1618
A1A1L2	9140-0112	1	COIL:FXD RF 4.7 UH	28480	9140-0112
A1A1L3	9140-0029	1	COIL/CHOKE:FXD 100 UH	99848	3100-15-101
A1A1L4	9140-0114	1	COIL:FXD RF 10 UH	28480	9140-0114
A1A1L5	9140-0237	1	COIL:FXD 200 UH 5%	28480	9140-0237
A1A1L6	9140-0137	1	COIL:FXD RF 1000 UH 5%	28480	9140-0137
A1A1L7	9140-0096	1	COIL/CHOKE 1.00 UH 10%	99800	1537-12
A1A1Q1	1854-0009	16	TSTR:SI NPN	80131	2N709
A1A1Q2	1854-0009		TSTR:SI NPN	80131	2N709
A1A1Q3	1854-0009		TSTR:SI NPN	80131	2N709
A1A1Q4	1854-0009		TSTR:SI NPN	80131	2N709
A1A1Q5	1854-0009		TSTR:SI NPN	80131	2N709
A1A1Q6	1854-0009		TSTR:SI NPN	80131	2N709
A1A1Q7	1854-0009		TSTR:SI NPN	80131	2N709
A1A1Q8	1854-0009		TSTR:SI NPN	80131	2N709
A1A1Q9	1854-0009		TSTR:SI NPN	80131	2N709
A1A1Q10	1854-0009		TSTR:SI NPN	80131	2N709
A1A1Q11	1854-0009		TSTR:SI NPN	80131	2N709
A1A1Q12	1854-0009		TSTR:SI NPN	80131	2N709
A1A1Q13	1854-0009		TSTR:SI NPN	80131	2N709
A1A1Q14	1854-0009		TSTR:SI NPN	80131	2N709
A1A1Q15	1854-0009		TSTR:SI NPN	80131	2N709
A1A1Q16	1854-0009		TSTR:SI NPN	80131	2N709
A1A1Q17	1854-0013	2	TSTR:SI NPN	80131	2N2218A
A1A1Q18	1854-0092	4	TSTR:SI NPN	80131	2N3563
A1A1Q19	1854-0013		TSTR:SI NPN	80131	2N2218A
A1A1Q20	1854-0035	1	TSTR:SI NPN	28480	1854-0035
A1A1Q21	1854-0092		TSTR:SI NPN	80131	2N3563
A1A1Q22	1854-0092		TSTR:SI NPN	80131	2N3563
A1A1Q23	1854-0023	2	TSTR:SI NPN(SELECTED FROM 2N2484)	28480	1854-0023
A1A1Q24	1854-0003	2	TSTR:SI NPN(SELECTED FROM 2N1711)	28480	1854-0003
A1A1Q25	1854-0003		TSTR:SI NPN(SELECTED FROM 2N1711)	28480	1854-0003
A1A1Q26	1854-0092		TSTR:SI NPN	80131	2N3563
A1A1Q27	1854-0023		TSTR:SI NPN(SELECTED FROM 2N2484)	28480	1854-0023
A1A1R1	0757-0900	3	R:FXD MET FLM 100 OHM 2% 1/8W	28480	0757-0900
A1A1R2	0698-3633	1	R:FXD MET OX 390 OHM 5% 2W	28480	0698-3633
A1A1R3	0757-0924	23	R:FXD MET FLM 1K OHM 2% 1/8W	28480	0757-0924

See introduction to this section for ordering information

Table 7-4. A1 Synthesizer Assembly Replaceable Parts (Continued)

Reference Designation	HP Part Number	Qty	Description	Mfr Code	Mfr Part Number
A1A1R4	0757-0924		R:FXD MET FLM 1K OHM 2% 1/8W	28480	0757-0924
A1A1R5	0757-0924		R:FXD MET FLM 1K OHM 2% 1/8W	28480	0757-0924
A1A1R6	0757-0924		R:FXD MET FLM 1K OHM 2% 1/8W	28480	0757-0924
A1A1R7	0757-0928	8	R:FXD FLM 1.5K OHM 2% 1/8W	28480	0757-0928
A1A1R8	0757-0928		R:FXD FLM 1.5K OHM 2% 1/8W	28480	0757-0928
A1A1R9	0757-0935	6	R:FXD FLM 3K OHM 2% 1/8W	28480	0757-0935
A1A1R10	0757-0938	6	R:FXD FLM 3.9K OHM 2% 1/8W	28480	0757-0938
A1A1R11	0757-0972	4	R:FXD FLM 100K OHM 2% 1/8W	28480	0757-0972
A1A1R12	0757-0935		R:FXD FLM 3K OHM 2% 1/8W	28480	0757-0935
A1A1R13	0757-0924		R:FXD MET FLM 1K OHM 2% 1/8W	28480	0757-0924
A1A1R14	0757-0928		R:FXD FLM 1.5K OHM 2% 1/8W	28480	0757-0928
A1A1R15	0757-0935		R:FXD FLM 3K OHM 2% 1/8W	28480	0757-0935
A1A1R16	0757-0924		R:FXD MET FLM 1K OHM 2% 1/8W	28480	0757-0924
A1A1R17	0757-0928		R:FXD FLM 1.5K OHM 2% 1/8W	28480	0757-0928
A1A1R18	0757-0938		R:FXD FLM 3.9K OHM 2% 1/8W	28480	0757-0938
A1A1R19	0757-0931	6	R:FXD FLM 2K OHM 2% 1/8W	28480	0757-0931
A1A1R20	0757-0931		R:FXD FLM 2K OHM 2% 1/8W	28480	0757-0931
A1A1R21	0757-0924		R:FXD MET FLM 1K OHM 2% 1/8W	28480	0757-0924
A1A1R22	0757-0938		R:FXD FLM 3.9K OHM 2% 1/8W	28480	0757-0938
A1A1R23	0757-0938		R:FXD FLM 3.9K OHM 2% 1/8W	28480	0757-0938
A1A1R24	0757-0972		R:FXD FLM 100K OHM 2% 1/8W	28480	0757-0972
A1A1R25	0757-0924		R:FXD MET FLM 1K OHM 2% 1/8W	28480	0757-0924
A1A1R26	0757-0935		R:FXD FLM 3K OHM 2% 1/8W	28480	0757-0935
A1A1R27	0757-0941	1	R:FXD FLM 5.1K OHM 2% 1/8W	28480	0757-0941
A1A1R28	0757-0924		R:FXD MET FLM 1K OHM 2% 1/8W	28480	0757-0924
A1A1R29	0757-0948	6	R:FXD FLM 10K OHM 2% 1/8W	28480	0757-0948
A1A1R30	0757-0924		R:FXD MET FLM 1K OHM 2% 1/8W	28480	0757-0924
A1A1R31	0757-0928		R:FXD FLM 1.5K OHM 2% 1/8W	28480	0757-0928
A1A1R32	0757-0928		R:FXD FLM 1.5K OHM 2% 1/8W	28480	0757-0928
A1A1R33	0757-0924		R:FXD MET FLM 1K OHM 2% 1/8W	28480	0757-0924
A1A1R34	0757-0931		R:FXD FLM 2K OHM 2% 1/8W	28480	0757-0931
A1A1R35	0757-0924		R:FXD MET FLM 1K OHM 2% 1/8W	28480	0757-0924
A1A1R36	0757-0938		R:FXD FLM 3.9K OHM 2% 1/8W	28480	0757-0938
A1A1R37	0757-0938		R:FXD FLM 3.9K OHM 2% 1/8W	28480	0757-0938
A1A1R38	0757-0924		R:FXD MET FLM 1K OHM 2% 1/8W	28480	0757-0924
A1A1R39	0757-0972		R:FXD FLM 100K OHM 2% 1/8W	28480	0757-0972
A1A1R40	0757-0924		R:FXD MET FLM 1K OHM 2% 1/8W	28480	0757-0924
A1A1R41	0757-0935		R:FXD FLM 3K OHM 2% 1/8W	28480	0757-0935
A1A1R42	0757-0924		R:FXD MET FLM 1K OHM 2% 1/8W	28480	0757-0924
A1A1R43	0757-0948		R:FXD FLM 10K OHM 2% 1/8W	28480	0757-0948
A1A1R44	0757-0900		R:FXD MET FLM 100 OHM 2% 1/8W	28480	0757-0900
A1A1R45	0757-0924		R:FXD MET FLM 1K OHM 2% 1/8W	28480	0757-0924
A1A1R46	0757-0928		R:FXD FLM 1.5K OHM 2% 1/8W	28480	0757-0928
A1A1R47	0757-0924		R:FXD MET FLM 1K OHM 2% 1/8W	28480	0757-0924
A1A1R48	0757-0928		R:FXD FLM 1.5K OHM 2% 1/8W	28480	0757-0928
A1A1R49	0757-0931		R:FXD FLM 2K OHM 2% 1/8W	28480	0757-0931
A1A1R50	0757-0924		R:FXD MET FLM 1K OHM 2% 1/8W	28480	0757-0924
A1A1R51	0757-0948		R:FXD FLM 10K OHM 2% 1/8W	28480	0757-0948
A1A1R52	0757-0924		R:FXD MET FLM 1K OHM 2% 1/8W	28480	0757-0924
A1A1R53	0757-0931		R:FXD FLM 2K OHM 2% 1/8W	28480	0757-0931
A1A1R54	0757-0967	1	R:FXD FLM 62K OHM 2% 1/8W	28480	0757-0967
A1A1R55	0757-0962	2	R:FXD FLM 39K OHM 2% 1/8W	28480	0757-0962
A1A1R56	0757-0948		R:FXD FLM 10K OHM 2% 1/8W	28480	0757-0948
A1A1R57	0757-0893	4	R:FXD FLM 51 OHM 2% 1/8W	28480	0757-0893
A1A1R58	0757-0916	1	R:FXD MET FLM 470 OHM 2% 1/8W	28480	0757-0916
A1A1R59	0757-0948		R:FXD FLM 10K OHM 2% 1/8W	28480	0757-0948
A1A1R60	0757-0933	1	R:FXD FLM 2.4K OHM 2% 1/8W	28480	0757-0933
A1A1R61	0757-0907	1	R:FXD FLM 200 OHM 2% 1/8W	28480	0757-0907
A1A1R62	0721-0011	2	R:FXD DEPC 500K OHM 1% 1/8W	28480	0721-0011
A1A1R63	0757-0910	1	R:FXD MET FLM 270 OHM 2% 1/8W	28480	0757-0910
A1A1R64	0757-0931		R:FXD FLM 2K OHM 2% 1/8W	28480	0757-0931
A1A1R65	0757-0969	1	R:FXD FLM 75K OHM 2% 1/8W	28480	0757-0969
A1A1R66	0757-0957	1	R:FXD FLM 24K OHM 2% 1/8W	28480	0757-0957
A1A1R67	0757-0893		R:FXD FLM 51 OHM 2% 1/8W	28480	0757-0893
A1A1R68	0757-0893		R:FXD FLM 51 OHM 2% 1/8W	28480	0757-0893
A1A1R69	0757-0929	3	R:FXD FLM 1.6K OHM 2% 1/8W	28480	0757-0929
A1A1R70	0757-0936	1	R:FXD FLM 3.3K OHM 2% 1/8W	28480	0757-0936
A1A1R71	0757-0965	1	R:FXD FLM 51K OHM 2% 1/8W	28480	0757-0965
A1A1R72	0757-0972		R:FXD FLM 100K OHM 2% 1/8W	28480	0757-0972
A1A1R73	0698-3130	3	R:FXD MET FLM 2.70 MEGOHM 1% 1/8W	28480	0698-3130
A1A1R74	0698-3130		R:FXD MET FLM 2.70 MEGOHM 1% 1/8W	28480	0698-3130
A1A1R75	0757-0924		R:FXD MET FLM 1K OHM 2% 1/8W	28480	0757-0924
A1A1R76	0757-0929		R:FXD FLM 1.6K OHM 2% 1/8W	28480	0757-0929
A1A1R77	0757-0902	1	R:FXD MET FLM 120 OHM 2% 1/8W	28480	0757-0902
A1A1R78	0757-0935		R:FXD FLM 3K OHM 2% 1/8W	28480	0757-0935

Table 7-4. A1 Synthesizer Assembly Replaceable Parts (Continued)

Reference Designation	HP Part Number	Qty	Description	Mfr Code	Mfr Part Number
A1A1R79	0698-3129	1	R:FXD DEPC 1.00 MEGOHM 1% 1/8W	28480	0698-3129
A1A1R80	0721-0011		R:FXD DEPC 500K OHM 1% 1/8W	28480	0721-0011
A1A1R81	0757-0960	1	R:FXD FLM 33K OHM 2% 1/8W	28480	0757-0960
A1A1R82	0698-3126	1	R:FXD DEPC 2.21 MEGOHM 1% 1/8W	28480	0698-3126
A1A1R83	0698-3127	1	R:FXD DEPC 4.75 MEGOHM 2% 1/8W	28480	0698-3127
A1A1R84	0757-0948		R:FXD FLM 10K OHM 2% 1/8W	28480	0757-0948
A1A1R85	0757-0943	1	R:FXD FLM 6.2K OHM 2% 1/8W	28480	0757-0943
A1A1R86	0698-3130		R:FXD MET FLM 2.70 MEGOHM 1% 1/8W	28480	0698-3130
A1A1R87	0757-0950	1	R:FXD FLM 12K OHM 2% 1/8W	28480	0757-0950
A1A1R88	0757-0924		R:FXD MET FLM 1K OHM 2% 1/8W	28480	0757-0924
A1A1R89	0757-0924		R:FXD MET FLM 1K OHM 2% 1/8W	28480	0757-0924
A1A1R90	0757-0942	1	R:FXD FLM 5.6K OHM 2% 1/8W	28480	0757-0942
A1A1R91	0757-0929		R:FXD FLM 1.6K OHM 2% 1/8W	28480	0757-0929
A1A1R92	0757-0893		R:FXD FLM 51 OHM 2% 1/8W	28480	0757-0893
A1A1R93	0757-0934	1	R:FXD FLM 2.7K OHM 2% 1/8W	28480	0757-0934
A1A1R94	0757-0962		R:FXD FLM 39K OHM 2% 1/8W	28480	0757-0962
A1A1R95	0757-0900		R:FXD MET FLM 100 OHM 2% 1/8W	28480	0757-0900
A1A1R96	0757-0924		R:FXD MET FLM 1K OHM 2% 1/8W	28480	0757-0924
A1A1T1	05065-8012	1	TRANSFORMER:BLOCKING OSCILLATOR	28480	05065-8012
A1A1T2	05065-8011	2	TRANSFORMER:5.3MHZ	28480	05065-8011
A1A1T3	05065-8011		TRANSFORMER:5.3MHZ	28480	05065-8011
A1A1XY1	1200-0159	1	CRYSTAL HOLDER	28480	1200-0159
A1A1Y1	0410-0162	1	CRYSTAL:5.315MHZ	28480	0410-0162

See introduction to this section for ordering information

Figure 7-7
SYNTHESIZER ASSEMBLY A1 BLOCK DIAGRAM

Figure 7-6. A1 Waveforms

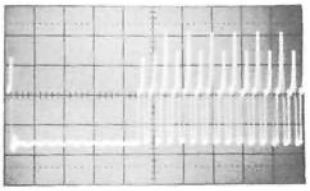

1 .5/cm, .5 s/cm



2 1 V/cm, .5 s/cm

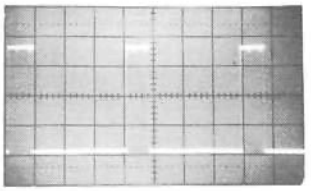

3 Q3 Col & Q7 Col Grd.
.5 V/cm, 5 s/cm

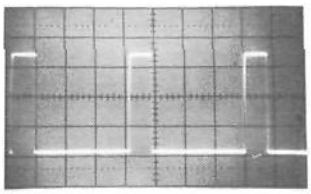

4 1 V/cm, 5 s/cm

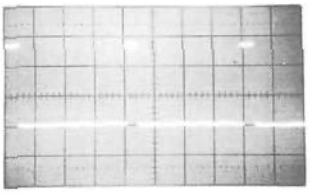

5 .5 V/cm, 50 s/cm

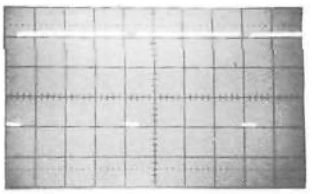

6 .5 V/cm, 50 s/cm

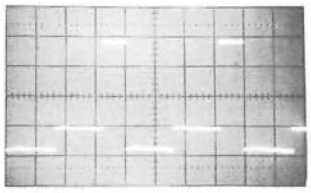

7 Time Scale 0000
.5 V/cm, .5 ms/cm

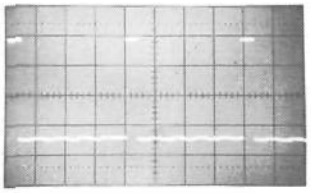

8 Q3 Col & Q7 Col Grd.
1 V/cm, .5 ms/cm

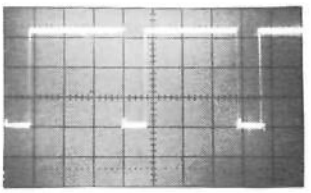

9 Q11, Q3, & Q7 Col,
Shorted to Grd.
.5 V/cm, .5 s/cm

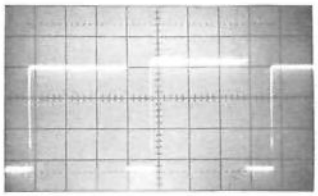

10 1 V/cm, .5 s/cm*

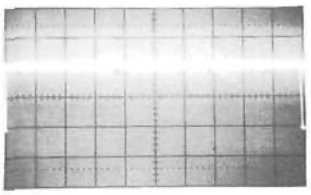

11 Time Scale 0000
2 V/cm, .2 ms/cm

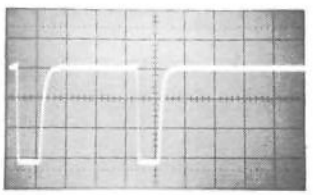

12 TPI - Q7 Col Grd.
.5 V/cm, .5 s/cm

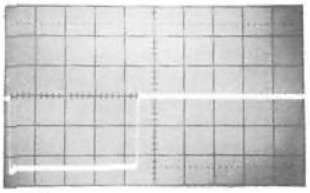

13 1 V/cm, .5 s/cm

5065A: Normal Operation unless noted.
Oscilloscope: DC coupled

*A1Q3(c) and A1Q7(c) connected to A1 chassis ground.

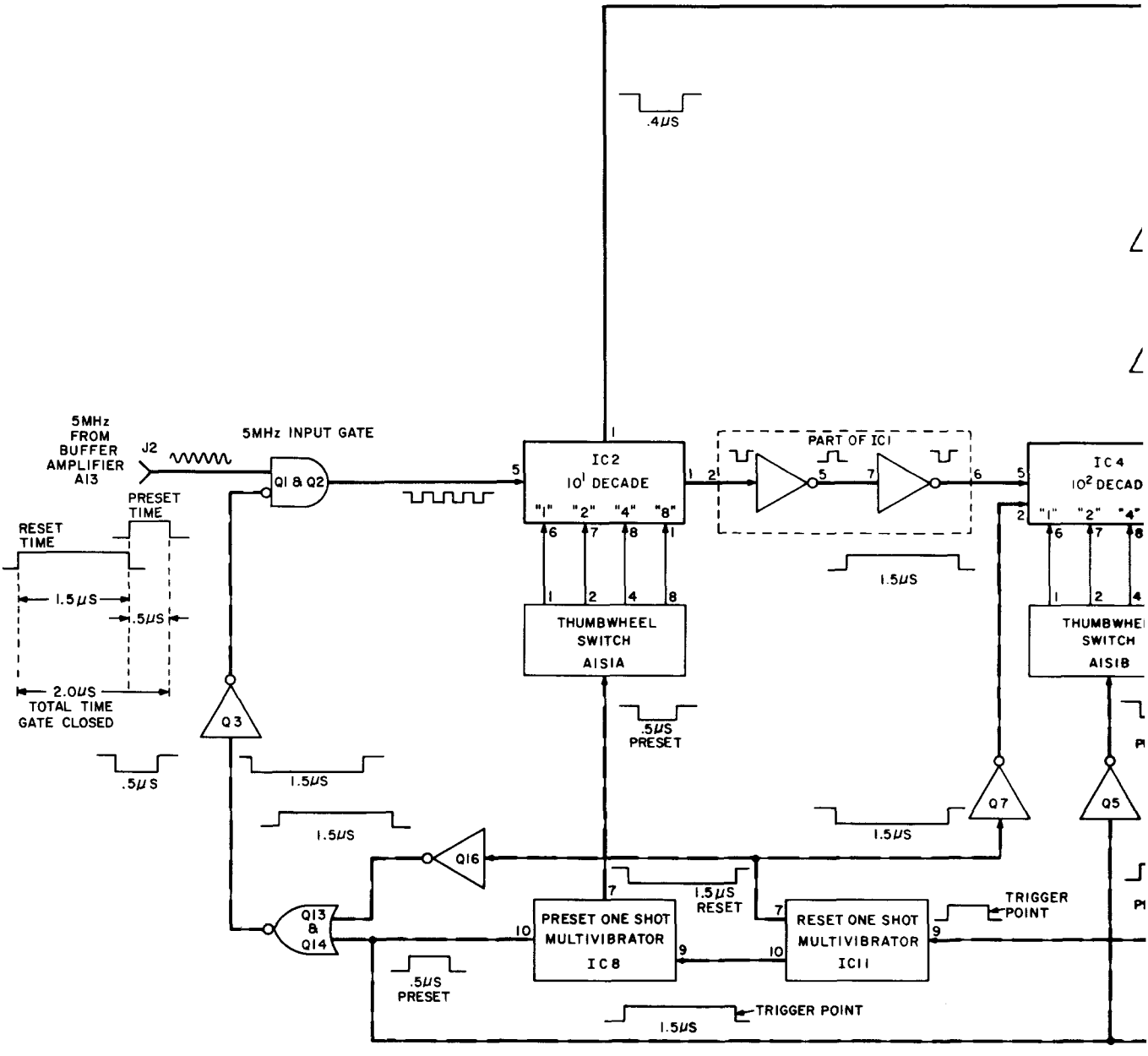
.4μS
5MHz FROM BUFFER AMPLIFIER A13
J2
5MHz INPUT GATE
Q1 & Q2
PRESET TIME
RESET TIME
1.5μS
.5μS
2.0μS TOTAL TIME GATE CLOSED
Q3
.5μS
1.5μS
IC2 10¹ DECADE
"1" "2" "4" "8"
PART OF IC1
1.5μS
THUMBWHEEL SWITCH A1S1A
.5μS PRESET
IC 4 10² DECAD
THUMBWHEL SWITCH A1S1B
Q7
Q5
1.5μS
1.5μS
Q16
1.5μS RESET
Q13 & Q14
PRESET ONE SHOT MULTIVIBRATOR IC8
RESET ONE SHOT MULTIVIBRATOR IC11
TRIGGER POINT
.5μS PRESET
TRIGGER POINT
1.5μS

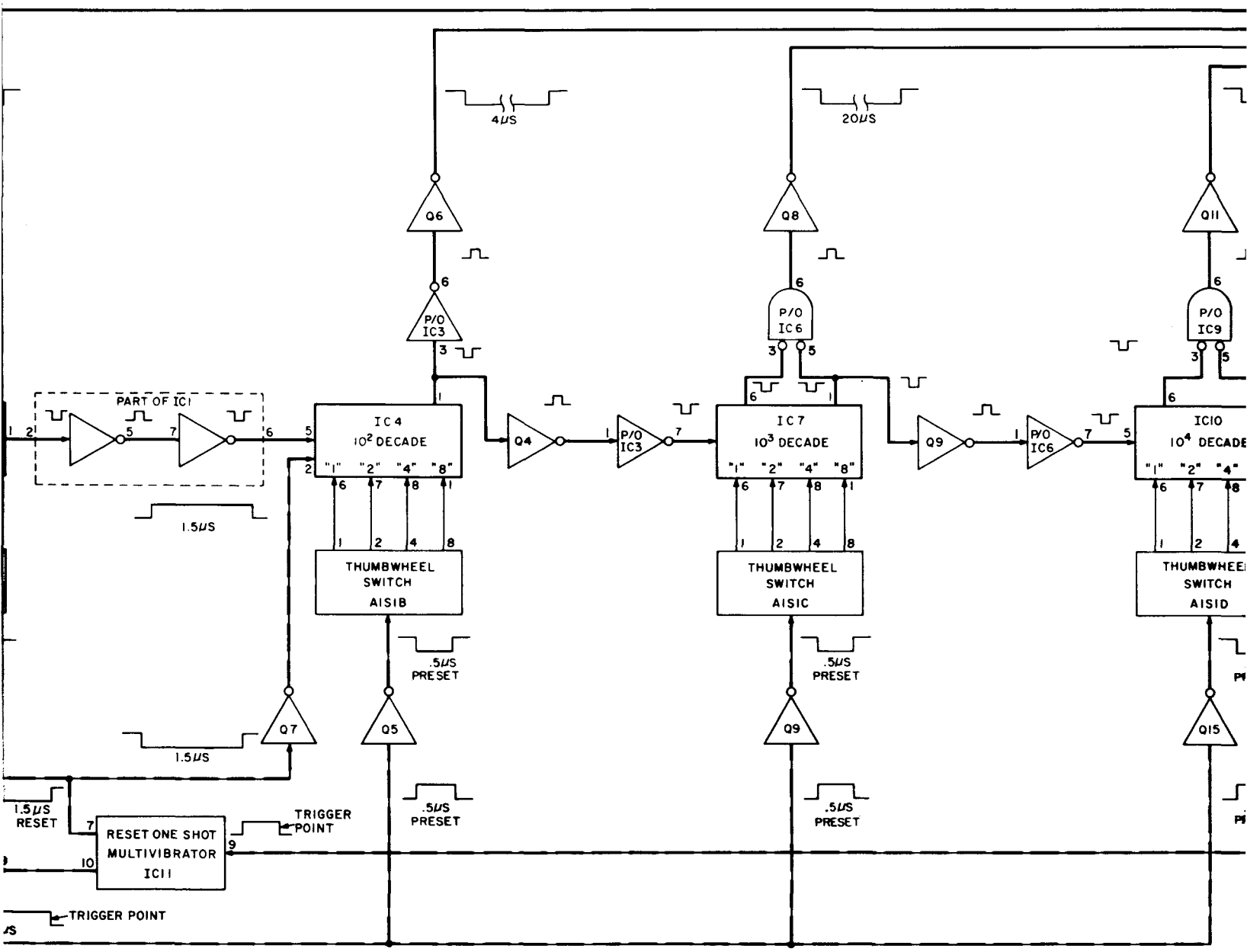
4μS
20μS
Q6
Q8
Q11
P/O IC3
P/O IC6
P/O IC9
PART OF IC1
IC 4
10^2 DECADE
IC 7
10^3 DECADE
IC10
10^4 DECADE
Q4
P/O IC3
Q9
P/O IC6
"1" "2" "4" "8"
1.5μS
THUMBWHEEL SWITCH A1S1B
THUMBWHEEL SWITCH A1S1C
THUMBWHEEL SWITCH A1S1D
.5μS PRESET
Q7
Q5
Q9
Q15
1.5μS RESET
RESET ONE SHOT MULTIVIBRATOR IC11
TRIGGER POINT

Fi

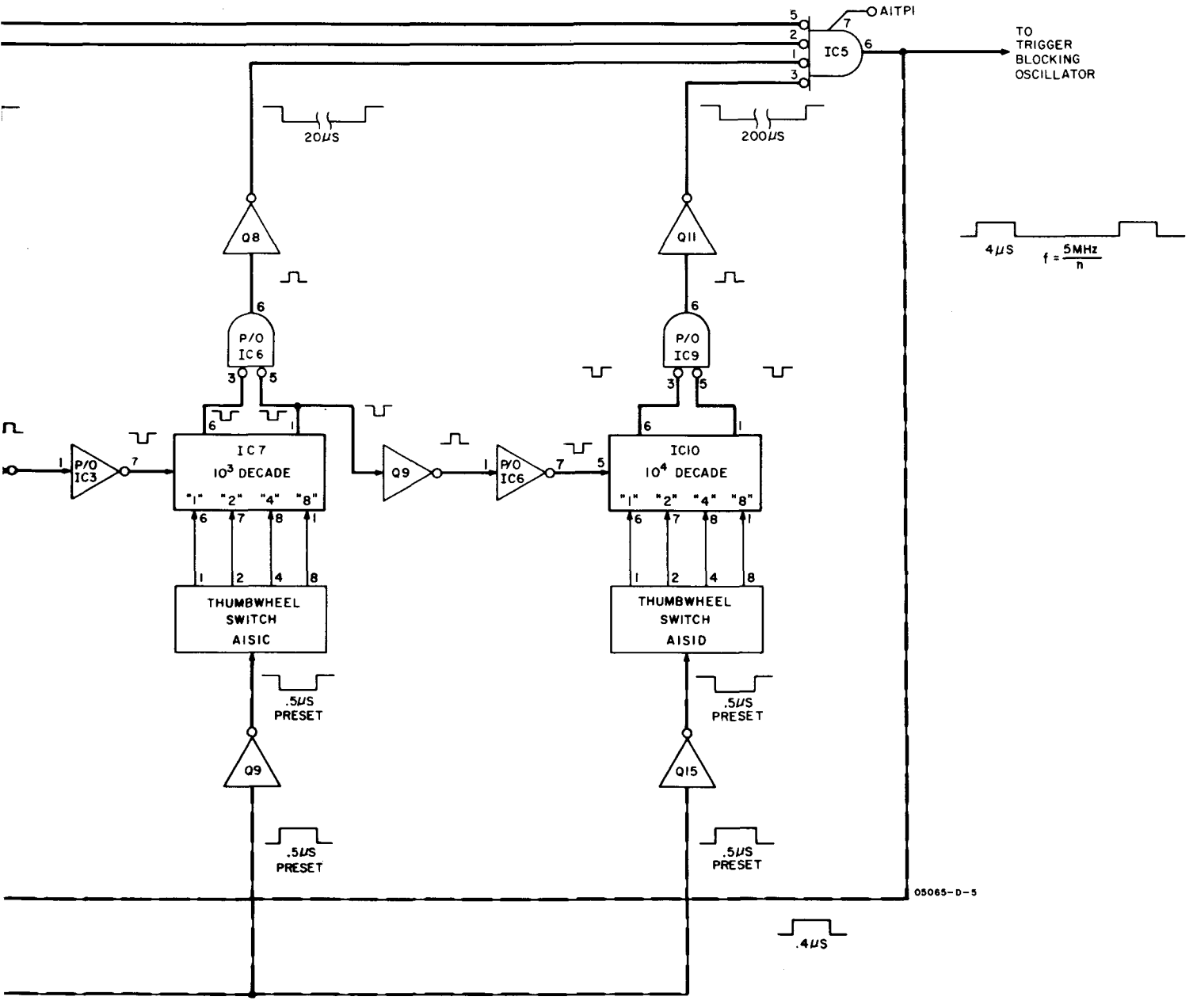

Figure 7-7. Synthesizer Assembly A1 Block Diagram

Figure 7-9
PART OF A1 SYNTHESIZER ASSEMBLY

(See Page 7-23)

Figure 7-8. A1 Synthesizer Assembly

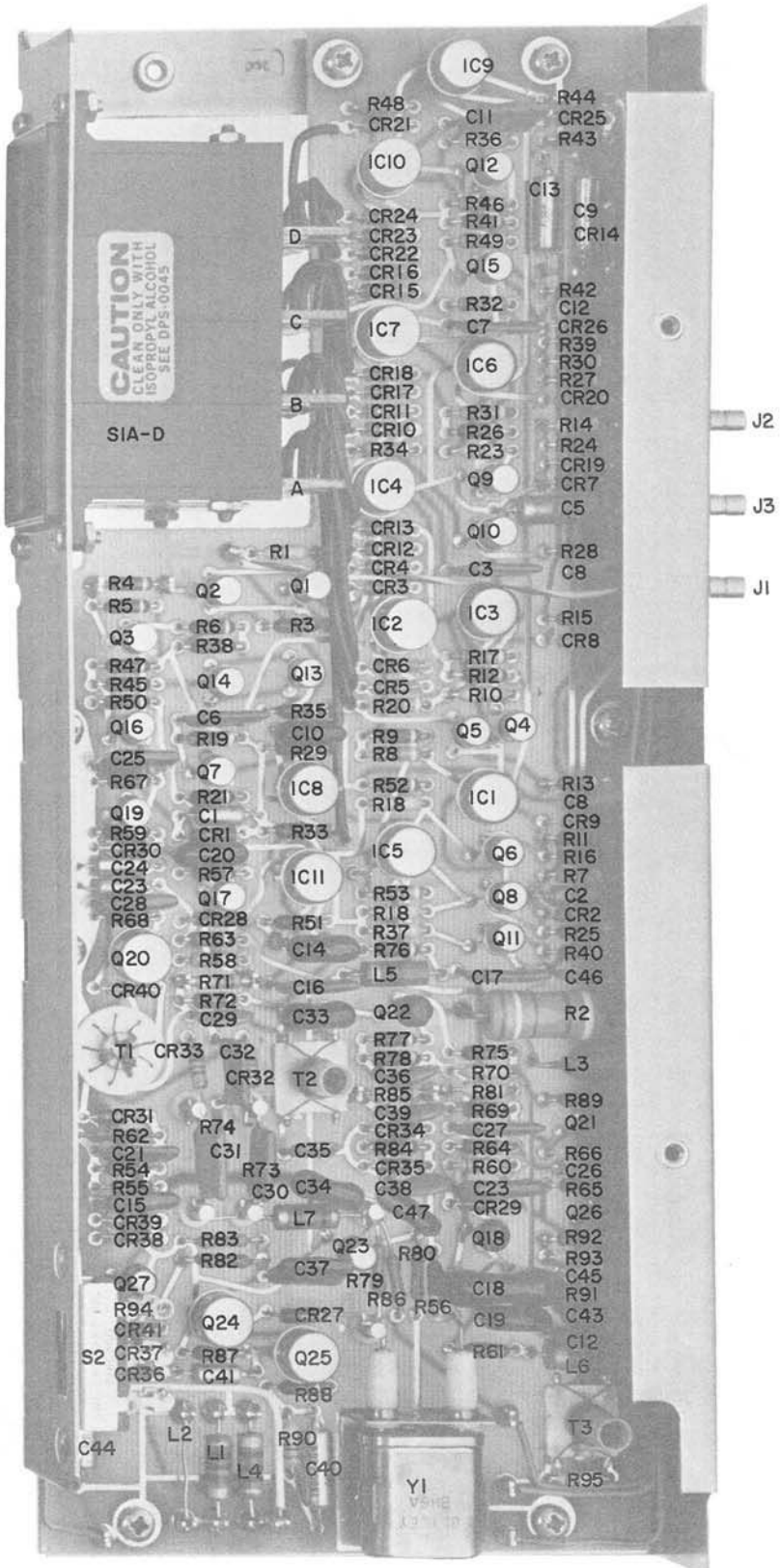

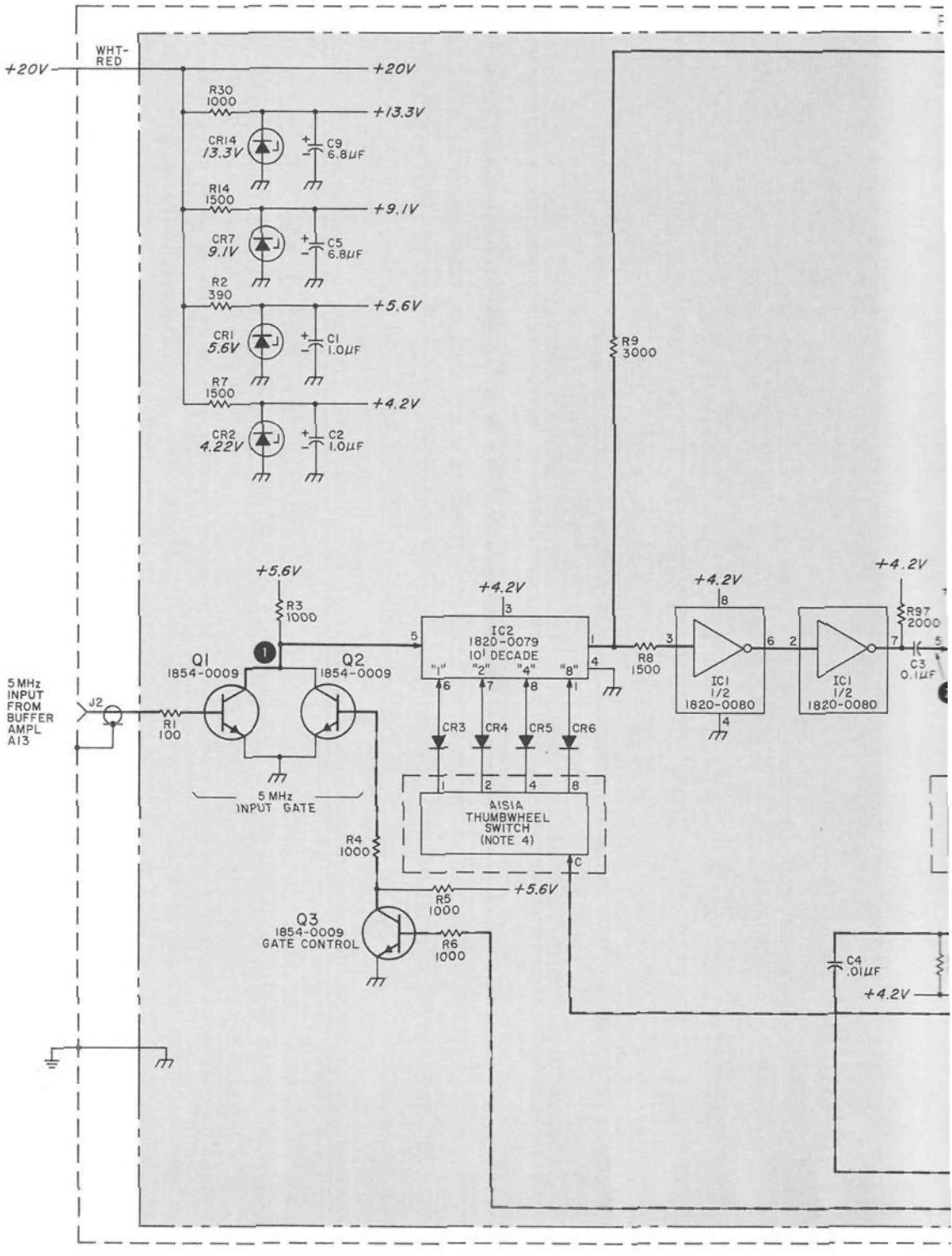
+20V
WHT-RED
+20V
R30 1000
+13.3V
CR14 13.3V
C9 6.8µF
R14 1500
+9.1V
CR7 9.1V
C5 6.8µF
R2 390
+5.6V
CR1 5.6V
C1 1.0µF
R7 1500
+4.2V
CR2 4.22V
C2 1.0µF
R9 3000
+5.6V
R3 1000
+4.2V
IC2 1820-0079 10¹ DECADE
"1" "2" "4" "8"
R8 1500
+4.2V
IC1 1/2 1820-0080
+4.2V
R97 2000
C3 0.1µF
IC1 1/2 1820-0080
5 MHz INPUT FROM BUFFER AMPL A13
J2
R1 100
Q1 1854-0009
Q2 1854-0009
5 MHz INPUT GATE
CR3 CR4 CR5 CR6
A1S1A THUMBWHEEL SWITCH (NOTE 4)
R4 1000
R5 1000
+5.6V
Q3 1854-0009 GATE CONTROL
R6 1000
C4 .01µF
+4.2V

PART OF A1 SYNTHESIZER ASSEMBLY (05065-6018) (NOTE 1)

PART OF A1A1 SYNTHESIZER P.C. BOARD ASSEMBLY (05065-6019)

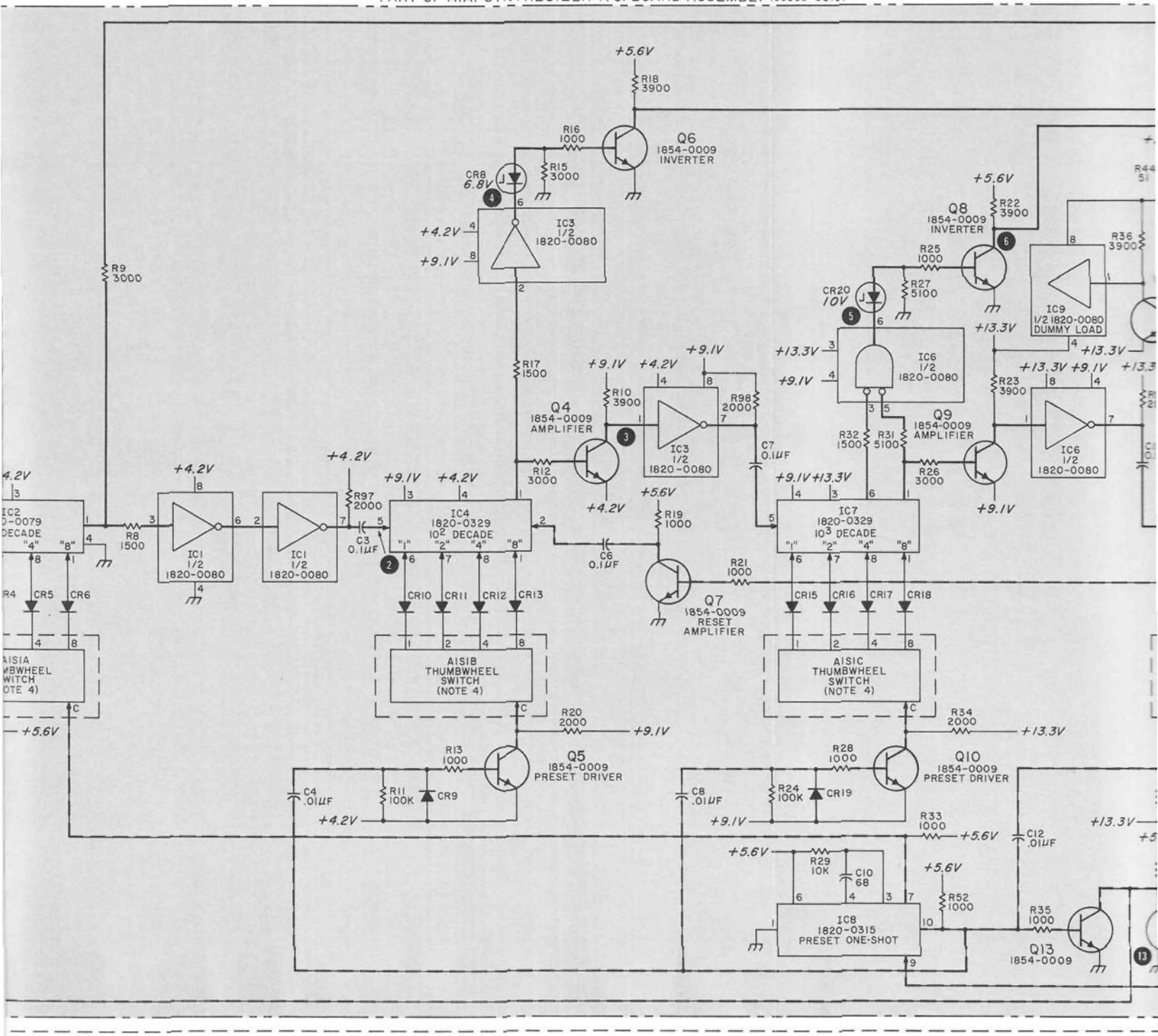

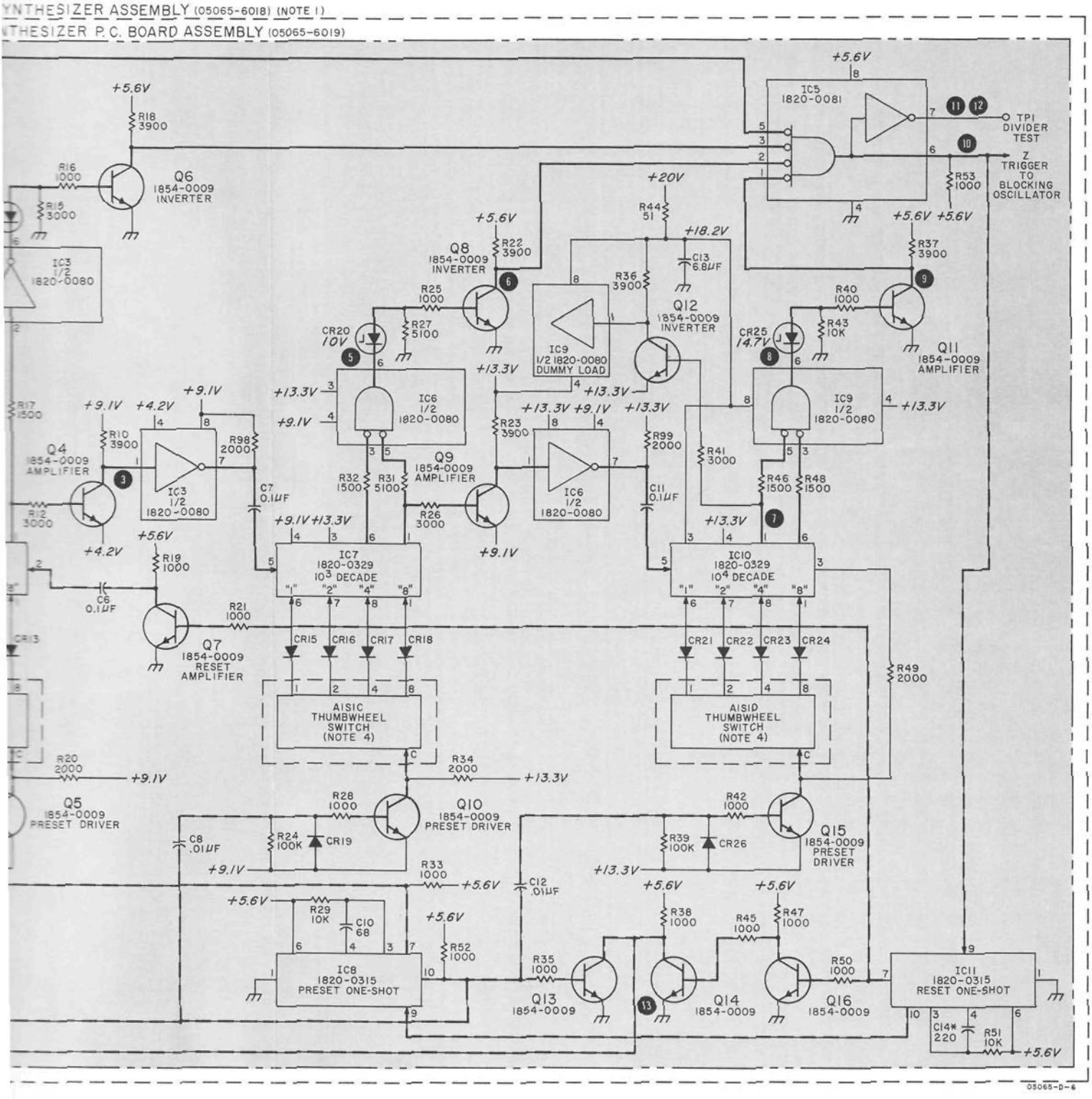

Figure 7-9. Part of A1 Synthesizer Assembly

Figure 7-11
SYNTHESIZER A1 PHASE-LOCKED OSCILLATOR SECTION

(See Page 7-25)

Figure 7-10. A1 Waveforms

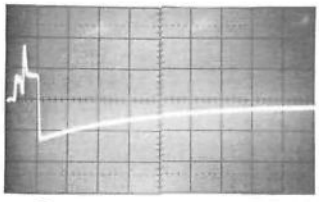

⑭ 1 V/cm, .5 s/cm

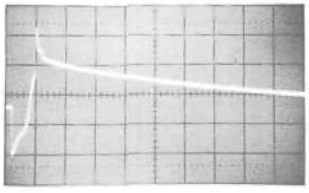

⑮ .5 V/cm, .5 s/cm

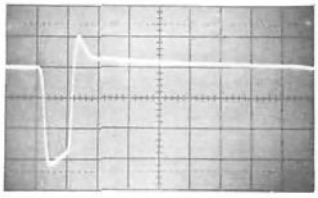

⑯ 5 V/cm, .1 s/cm

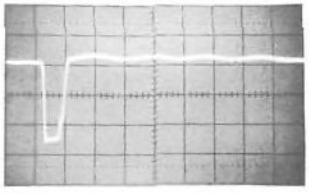

⑰ (Y1 OUT) 5 V/cm
.1 s/cm

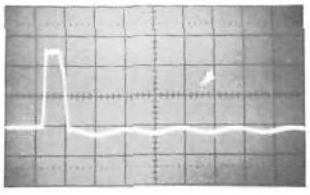

⑱ (Y1 OUT) 5 V/cm
.1 s/cm

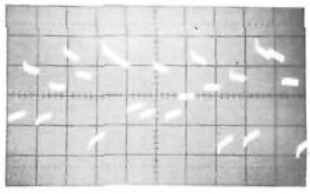

⑲ 2 V/cm, 2 ms/cm

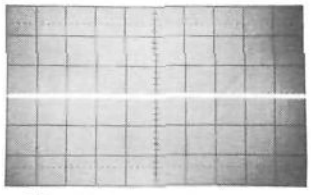

⑳ 2 V/cm, 2 ms/cm



㉑ 2 V/cm, .1 s/cm

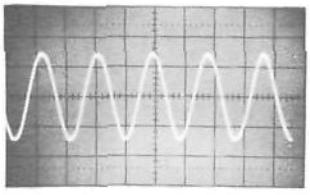

㉒ 1 V/cm, .1 s/cm

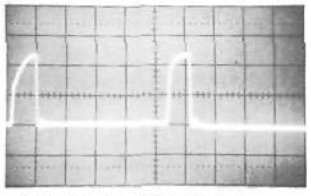

㉓ Q3 Col & Q7 Col Grd.
1 V/cm, .5 s/cm

5065A: Normal operation unless noted.

Oscilloscope: DC coupled

PART OF A1 SYNTHESIZER ASSEMI

PART OF A1A1 SYNTHESIZER P.C. BOAF

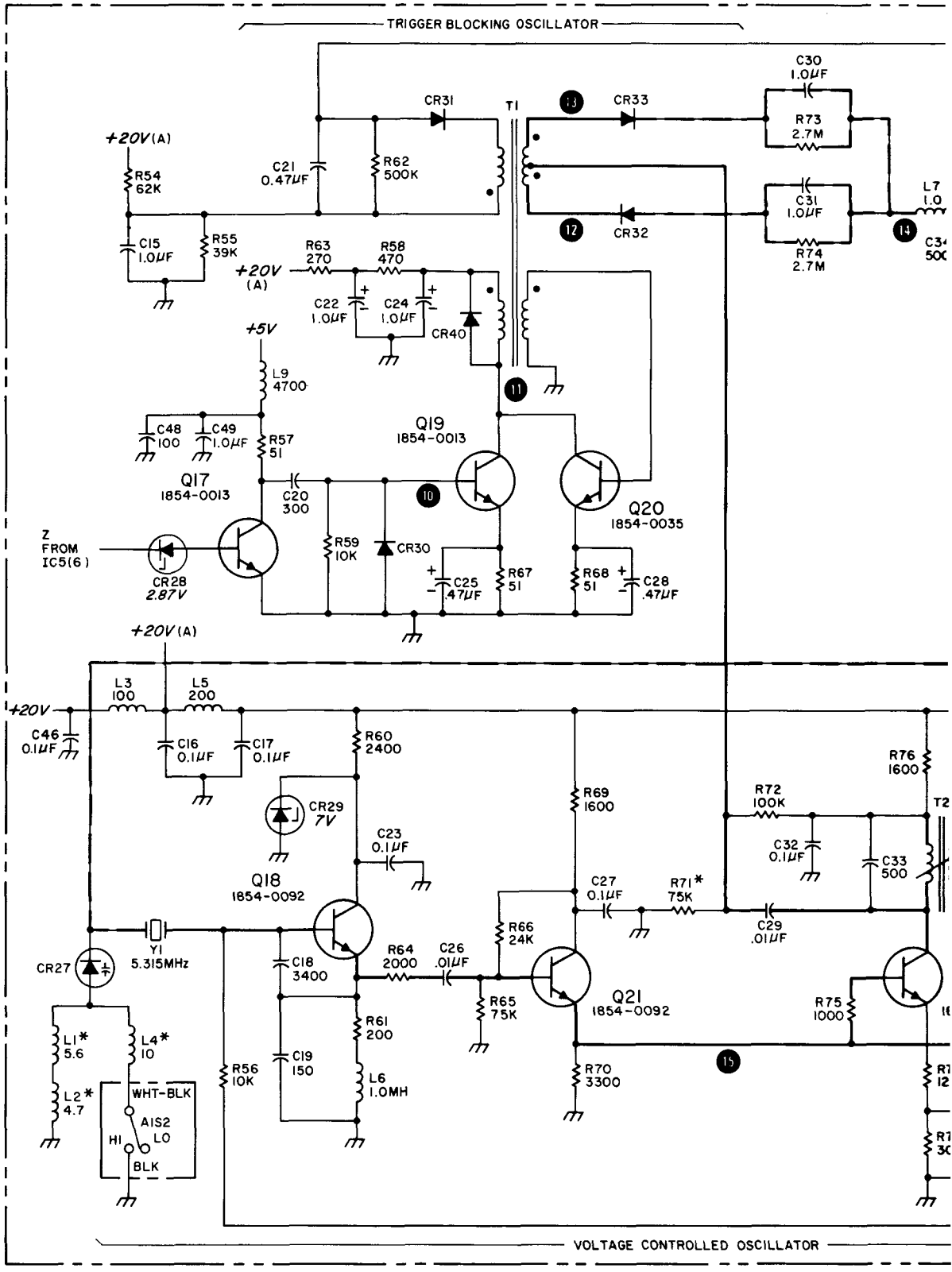

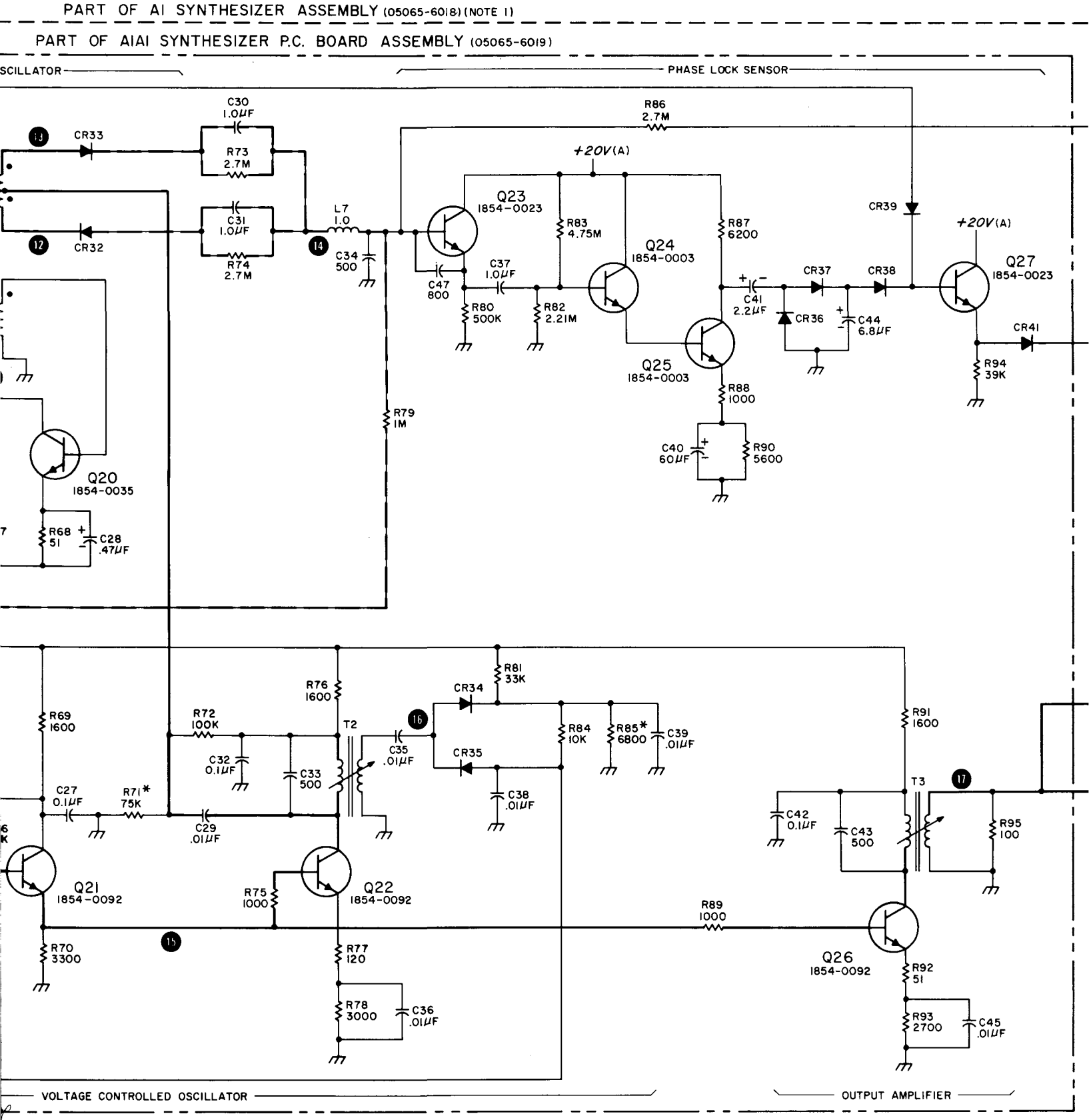
PART OF A1 SYNTHESIZER ASSEMBLY (05065-6018) (NOTE 1)
PART OF A1A1 SYNTHESIZER P.C. BOARD ASSEMBLY (05065-6019)
SCILLATOR
PHASE LOCK SENSOR
C30 1.0µF
CR33
R73 2.7M
C31 1.0µF
CR32
R74 2.7M
L7 1.0
C34 500
R86 2.7M
+20V(A)
Q23 1854-0023
R83 4.75M
C37 1.0µF
C47 800
R80 500K
R82 2.21M
Q24 1854-0003
R87 6200
C41 2.2µF
CR37
CR38
CR39
CR36
C44 6.8µF
+20V(A)
Q27 1854-0023
CR41
R94 39K
Q25 1854-0003
R88 1000
C40 60µF
R90 5600
R79 1M
Q20 1854-0035
R68 51
C28 .47µF
R81 33K
CR34
CR35
R84 10K
R85* 6800
C39 .01µF
C38 .01µF
R76 1600
R72 100K
T2
C35 .01µF
C32 0.1µF
C33 500
R69 1600
C27 0.1µF
R71* 75K
C29 .01µF
Q21 1854-0092
R75 1000
Q22 1854-0092
R70 3300
R77 120
R78 3000
C36 .01µF
R91 1600
T3
C42 0.1µF
C43 500
R95 100
R89 1000
Q26 1854-0092
R92 51
R93 2700
C45 .01µF
VOLTAGE CONTROLLED OSCILLATOR
OUTPUT AMPLIFIER

Figure 7-1

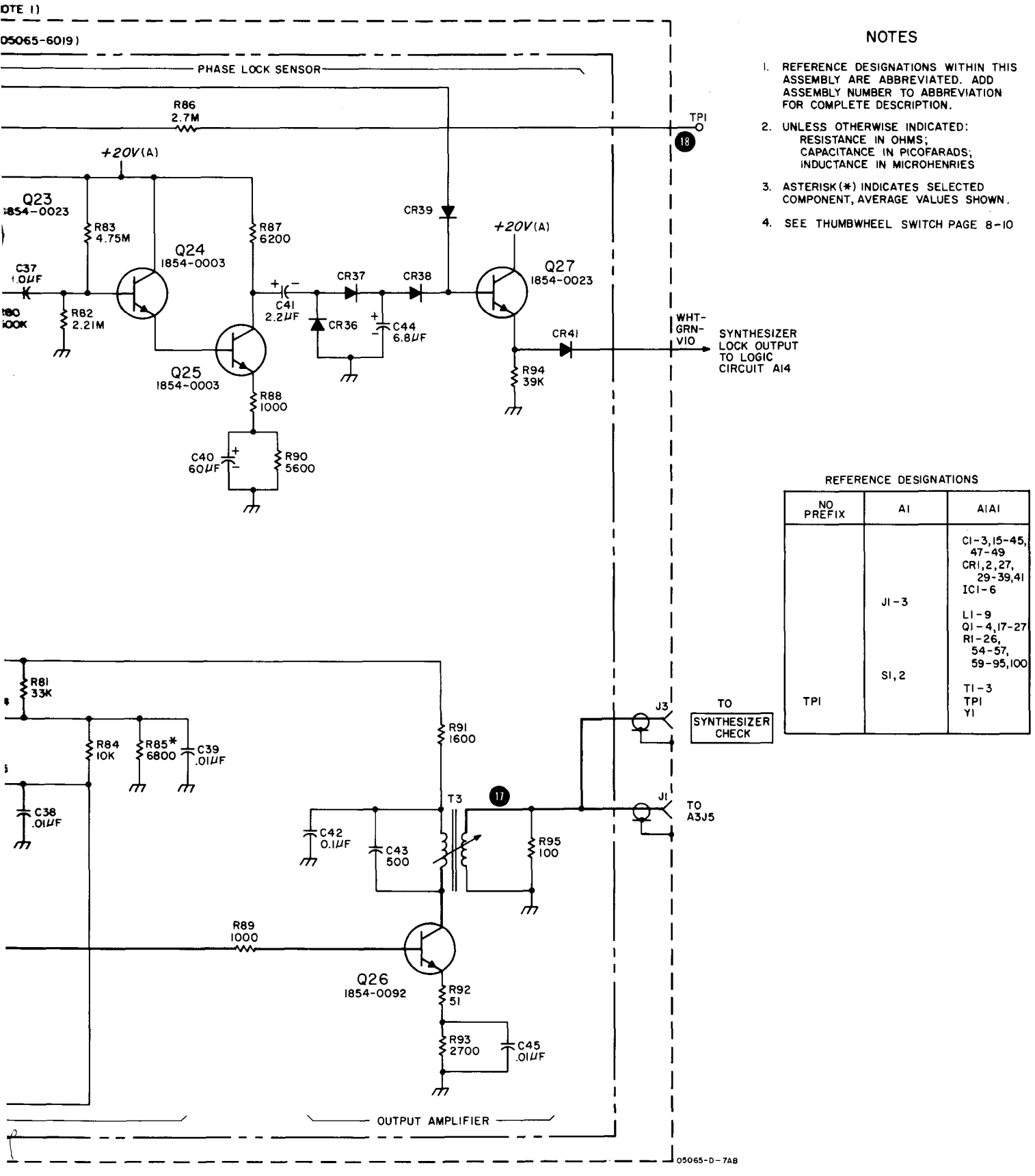

NOTES

1. REFERENCE DESIGNATIONS WITHIN THIS ASSEMBLY ARE ABBREVIATED. ADD ASSEMBLY NUMBER TO ABBREVIATION FOR COMPLETE DESCRIPTION.
2. UNLESS OTHERWISE INDICATED: RESISTANCE IN OHMS; CAPACITANCE IN PICOFARADS; INDUCTANCE IN MICROHENRIES
3. ASTERISK (*) INDICATES SELECTED COMPONENT, AVERAGE VALUES SHOWN.
4. SEE THUMBWHEEL SWITCH PAGE 8-10

REFERENCE DESIGNATIONS

NO PREFIX	A1	A1A1
		C1-3,15-45, 47-49 CR1,2,27, 29-39,41 IC1-6
	J1-3	
		L1-9 Q1-4,17-27 R1-26, 54-57, 59-95,100
	S1,2	
		T1-3
TP1		TP1 Y1

Figure 7-11. Synthesizer A1 Phase-Locked Oscillator Section

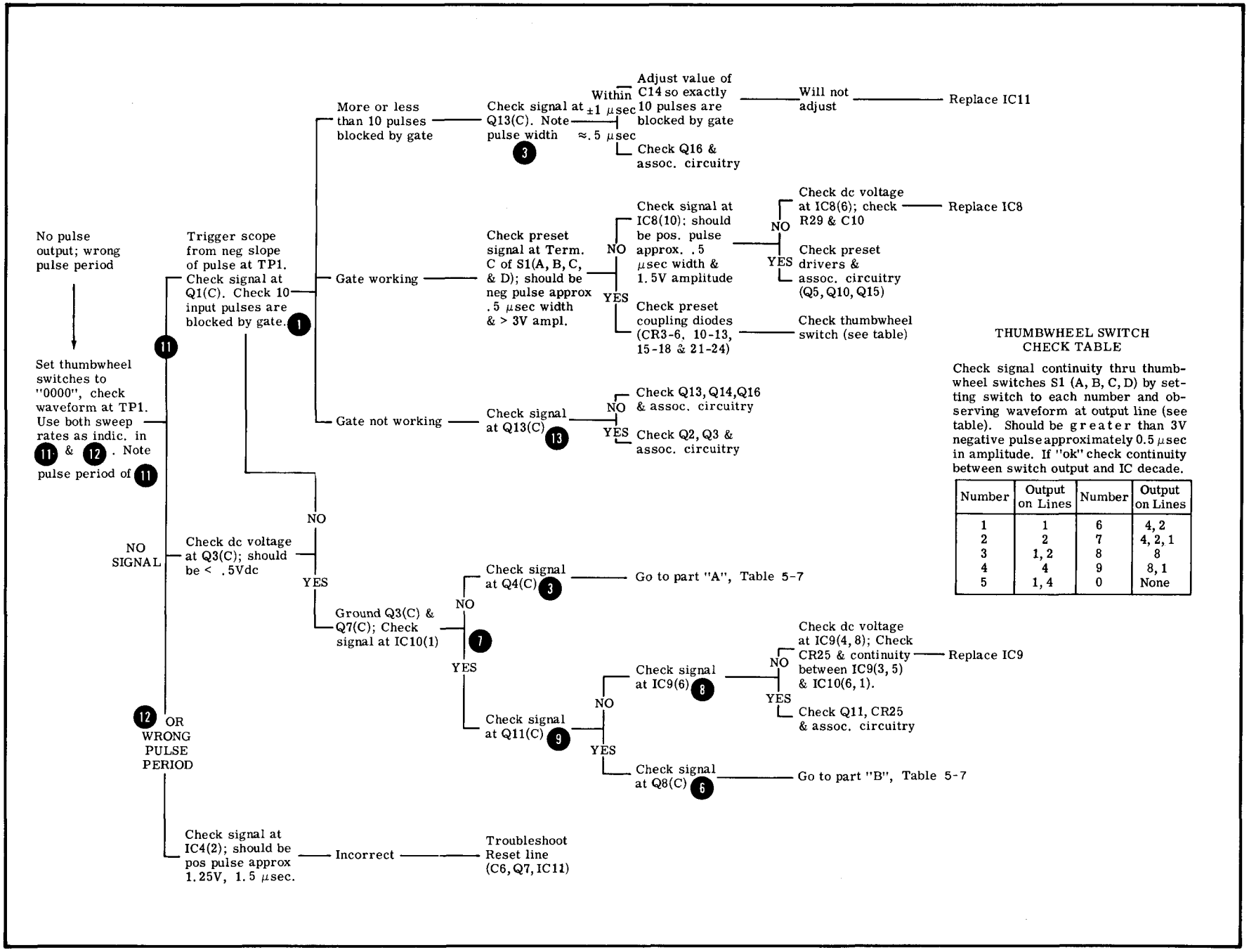

THUMBWHEEL SWITCH CHECK TABLE

Check signal continuity thru thumbwheel switches S1 (A, B, C, D) by setting switch to each number and observing waveform at output line (see table). Should be greater than 3V negative pulse approximately 0.5 μsec in amplitude. If "ok" check continuity between switch output and IC decade.

Number	Output on Lines	Number	Output on Lines
1	1	6	4, 2
2	2	7	4, 2, 1
3	1, 2	8	8
4	4	9	8, 1
5	1, 4	0	None

Table 7-5. A1 Troubleshooting

Table 7-6. A1 Troubleshooting

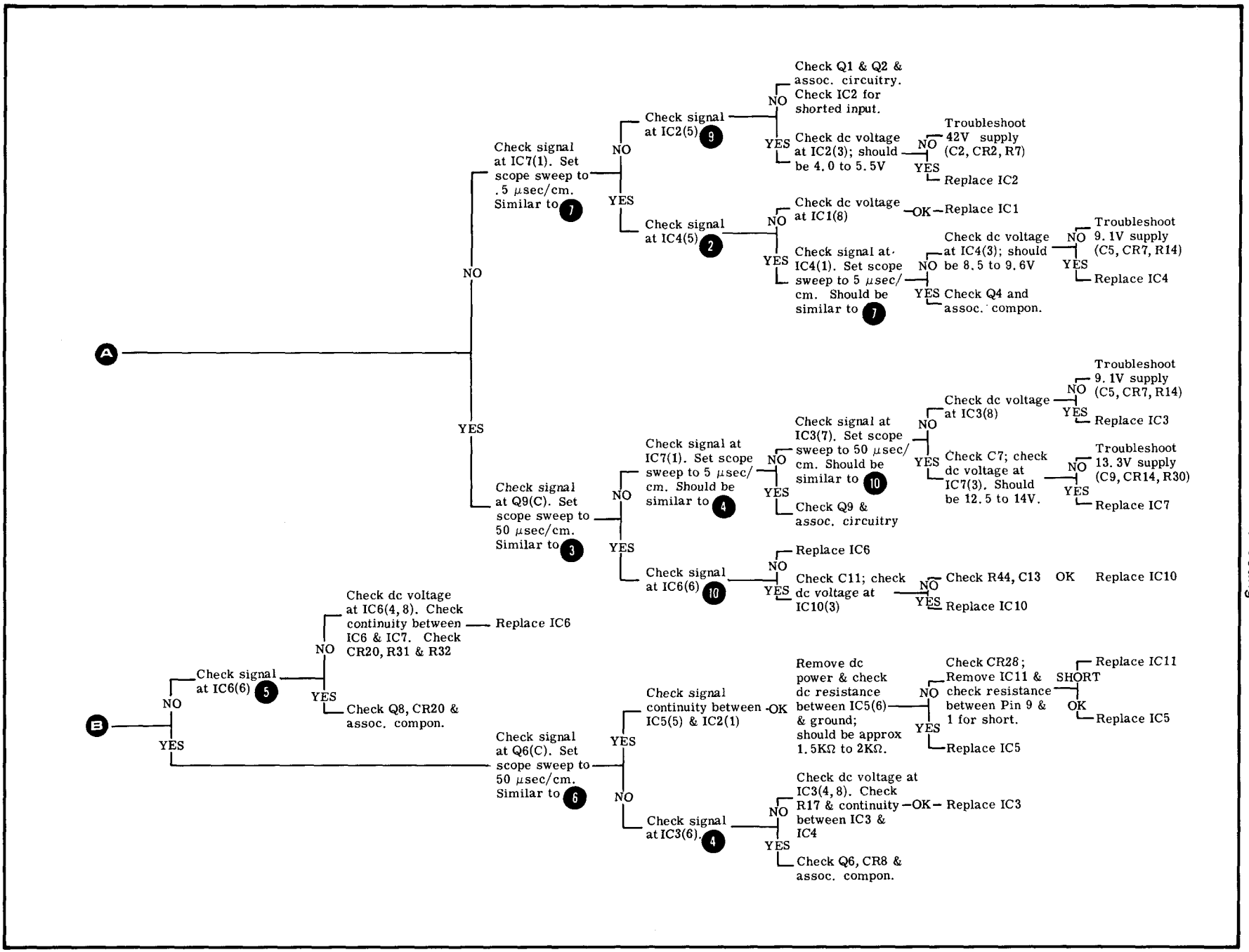

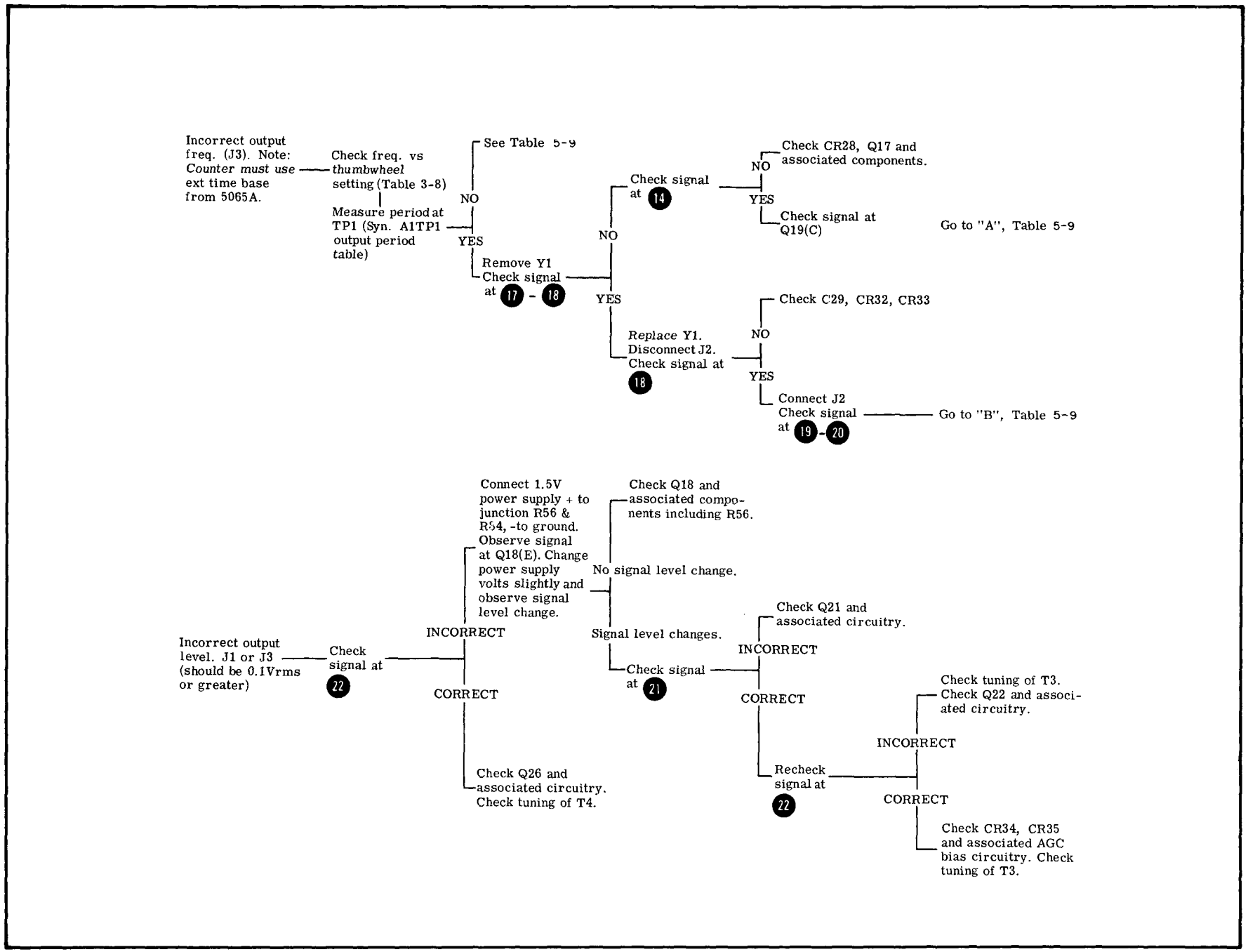

Table 7-7. A1 Troubleshooting

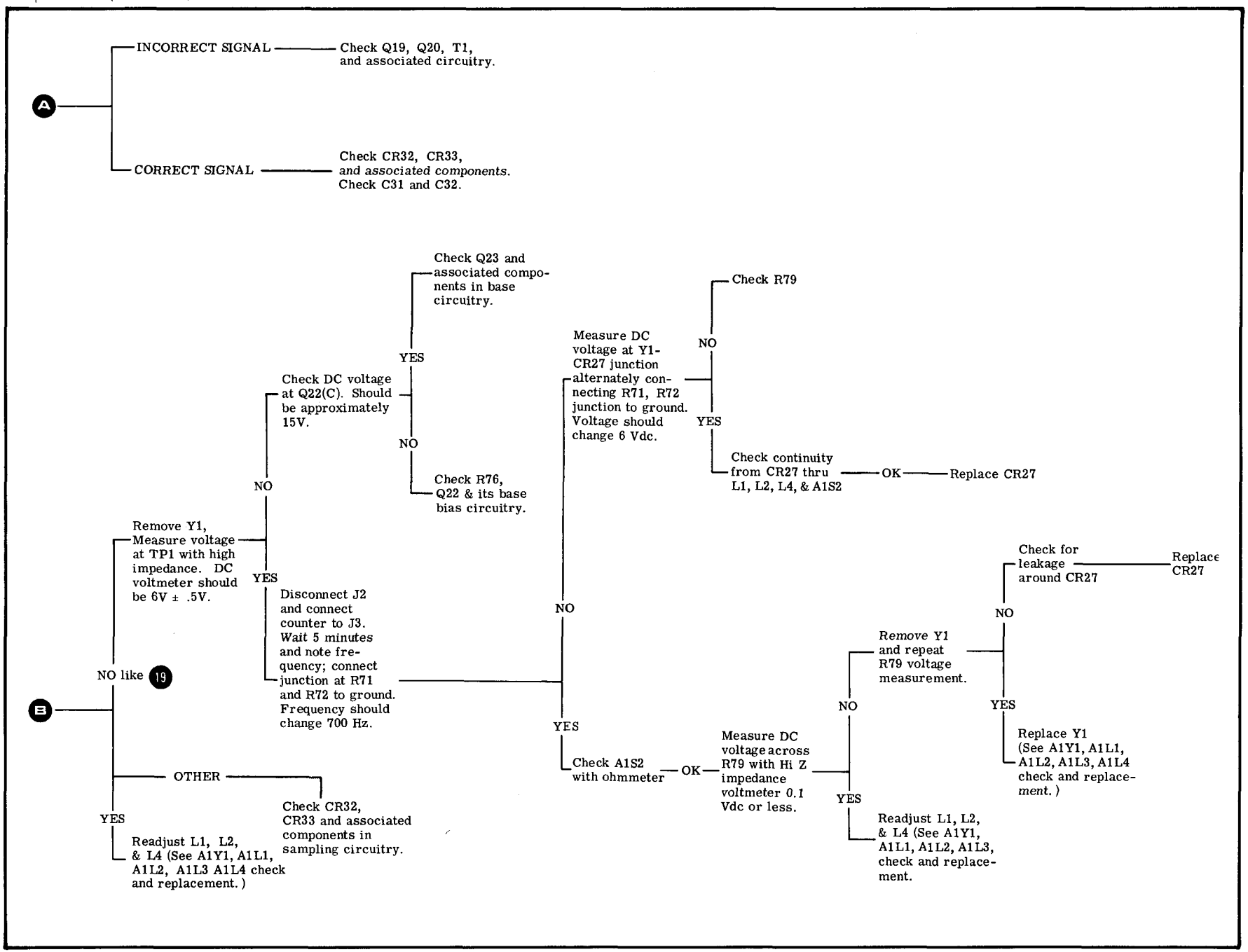
A
INCORRECT SIGNAL
Check Q19, Q20, T1, and associated circuitry.
CORRECT SIGNAL
Check CR32, CR33, and associated components. Check C31 and C32.
B
NO like 19
Remove Y1, Measure voltage at TP1 with high impedance. DC voltmeter should be 6V ± .5V.
NO
YES
Check DC voltage at Q22(C). Should be approximately 15V.
YES
Check Q23 and associated components in base circuitry.
NO
Check R76, Q22 & its base bias circuitry.
Disconnect J2 and connect counter to J3. Wait 5 minutes and note frequency; connect junction at R71 and R72 to ground. Frequency should change 700 Hz.
OTHER
YES
Readjust L1, L2, & L4 (See A1Y1, A1L1, A1L2, A1L3 A1L4 check and replacement.)
Check CR32, CR33 and associated components in sampling circuitry.
NO
Measure DC voltage at Y1-CR27 junction alternately connecting R71, R72 junction to ground. Voltage should change 6 Vdc.
NO
Check R79
YES
Check continuity from CR27 thru L1, L2, L4, & A1S2
OK
Replace CR27
YES
Check A1S2 with ohmmeter
OK
Measure DC voltage across R79 with Hi Z impedance voltmeter 0.1 Vdc or less.
NO
Remove Y1 and repeat R79 voltage measurement.
YES
Readjust L1, L2, & L4 (See A1Y1, A1L1, A1L2, A1L3, check and replacement.
NO
Check for leakage around CR27
Replace CR27
YES
Replace Y1 (See A1Y1, A1L1, A1L2, A1L3, A1L4 check and replacement.)

AC AMPLIFIER A7 THEORY

The Ac Amplifier is a low noise, high gain amplifier. This amplifier receives a low-level signal from A12 RVFR Assembly and provides an ac output proportional to amplitude and phase of the fundamental frequency of the input signal. At resonance, the input contains a large amount of 274 Hz second harmonic and a small amount of 137 Hz fundamental. The amplified 137 Hz fundamental is separated from the second harmonic, amplified, and applied to A8 Phase Detector Assembly. The 137 Hz output is also routed to A14 Logic Assembly as one logic input. The 274 Hz second harmonic is amplified, rectified, and routed to A14 Assembly as another logic input. These logic inputs are two of the signals which control the CONTINUOUS OPERATION lamp on the front panel. The Ac Amplifier also furnishes PHOTO I and 2ND HARMONIC inputs to the CIRCUIT CHECK meter.

The input signal, some 137 Hz but mostly 274 Hz at resonance, couples through J1. Input stage Q1 and Q2 form a low noise differential amplifier which feeds the push-pull inputs of IC1 that provides high gain. Note that the input at IC1(2) is ac-shunted to ground by C4. Thus the ac input to IC1 is single ended while the dc input is a balanced differential input. In addition, the feedback from IC1(6) to Q1 base treats ac and dc separately. This technique results in a preamplifier circuit that constitutes a transfer impedance; i.e., input is current and output is voltage. This impedance amounts to 2×10^7 ohms for ac and 10^5 ohms for dc. Thus for a 1μ a input signal, the output voltages is $10^{-6} \times 2 \times 10^{-7} = 20$ volts. R3 adjusts the input to zero volts dc. Zeners CR1 and CR2 provide +14.7 volts for IC1. Feedback to Q1 base restricts frequency response to approximately 6 kHz.

There are three IC1 outputs: (1) the twin-T filter connecting to Q5 and Q6, (2) the 2nd harmonic adjustment R19 and, (3) TP2 and the connection through A17(6) to the PHOTO I position of the CIRCUIT CHECK meter. The twin-T filter circuit works with Q5 and Q6 to give sharp rejection to the 274 Hz component of the input signal. The filtered 137 Hz component is amplified in IC2 and routed to A8 Phase Detector Assembly. Q8 serves to impedance match the notch filter circuit to the loop gain control R32. With R32 properly set, the ac amplifier (Q8, R32, and IC2) gain is about 40 dB. Zeners Q6 and Q7 provide $\pm$9.1 volts for IC2. Dc feedback from IC2(6) to IC2(2) sets IC2 gain.

The signal at 2nd harmonic adjustment R19 (which is mostly 274 Hz at resonance) is amplified, rectified, and then dc amplified in the 2nd harmonic detector circuit for a logic output to A14 Logic Assembly. Q3 and Q7 act as forward amplifiers, with Q4 functioning as a feedback amplifier. The RC components in Q7 collector circuit provide frequency compensation. Diodes CR4 and CR5 provide a rectified dc proportional to the input. Emitter follower Q9 feeds the 2nd harmonic output to the A14 Logic Assembly.

A7 MAINTENANCE

NORMAL OPERATION

a. Preamplifier A7Q1, Q2, and IC1 act as a transfer impedance, i.e, this circuit is designed to work from a current source and deliver a voltage output proportional to the current input. The equivalent transfer impedance of this preamplifier circuit is 2×10^7 ohms for ac signals and 10^5 for dc signals.

b. The notch filter circuit is set to notch out the second harmonic content of the modulation frequency (274 Hz).

c. The ac amplifier circuit of Q8 and IC2 has a gain of 40 dB adjustable by R32.

d. The second harmonic detector circuit amplifies and detects the preamplifier output, which is mostly 274 Hz at resonance. The dc output of this circuit routes to A14 Logic Assembly and to the 2ND HARMONIC position of the CIRCUIT CHECK switch.

OPERATIONAL CHECK

NOTE

This check need only be performed if trouble is suspected in the A7 Assembly.

a. A quick check of the A7 Assembly can be made by monitoring the output (yellow lead) with an oscilloscope, removing the input cable from A7J1 and, using a small metal tool, touching the center conductor of A7J1. The hum signal thus induced will cause a saturated or clipped signal to appear on the oscilloscope. This maximum signal output will peg the CIRCUIT CHECK meter when switched to 2ND HARMONIC.

b. A more precise test can be made by use of the following procedure.

1) Set up equipment as shown in A7 Test Setup. Use Micon-to-BNC test cable that is supplied, for the connection to A7J1.

2) Set oscillator frequency to 137 Hz and output level to .5 V peak-to-peak.

A7 Test Setup

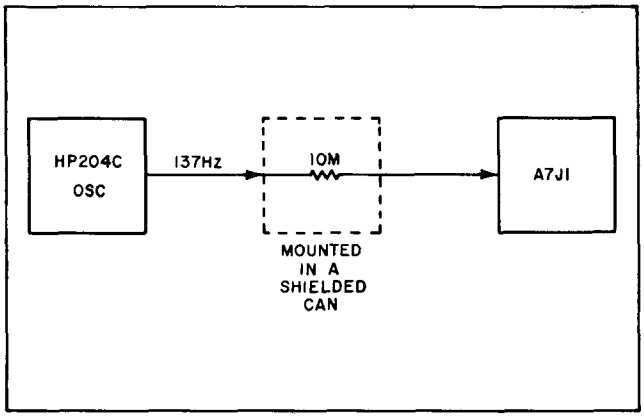

3) Connect oscilloscope to A7TP2. Output should be about 1V peak-to-peak.

4) Connect oscilloscope to A7TP1. Signal should be about 0.5 V peak-to-peak.

5) Connect oscilloscope to A7 output (yellow lead). Signal gain at this point with respect to the signal level at A7TP1 can be varied from zero to approximately 100 by R32. With R32 set for proper loop gain, the A7 output signal will be roughly 10 to 40 times the signal at A7TP1.

6) Set CIRCUIT CHECK meter switch to 2ND HARMONIC. Reduce oscillator output and allowing for a time lag, note the CIRCUIT CHECK meter response. Meter should follow oscillator level setting. This procedure checks the second harmonic detector circuit of the A7 Assembly.

7) Remove the test setup and oscilloscope connections. Using the Micon-to-BNC test cable provided, connect a dc voltmeter to A7J1. DC voltage at this point should not exceed ±5 mV. Excessive dc voltage at this point will result in a noisy solar cell (A12 RVFR Assembly) output. Adjust A7R3 to bring this voltage below ±5 mV if required.

8) Remove test cable and dc voltmeter. Reconnect cable from A12 Assembly to A7J1.

TROUBLESHOOTING AND REPAIR

a. If any components in the preamplifier circuit are replaced, connect a voltmeter to A7Q1 base and adjust A7R3 for less than 0.5 mV at this point.

b. After any repairs to A7 Assembly, adjust A7R32 as described in Section 5-30, LOOP GAIN ADJUSTMENT.

MODULE REPLACEMENT

If the A7 Assembly is replaced with either a repaired or new Assembly, set A7R3 as described in the preceeding section TROUBLESHOOTING AND REPAIR. Also A7R32, the loop gain adjustment, should be adjusted as described in Section 5-30, LOOP GAIN ADJUSTMENT. Perform adjustments outlined in Paragraphs 5-27 to 5-31.

Table 7-9. A7 AC Amplifier Assembly Replaceable Parts

Reference Designation	HP Part Number	Qty	Description	Mfr Code	Mfr Part Number
A7	05065-6010	1	MODULAR ASSY:AC AMPLIFIER	28480	05065-6010
A7J1	1250-0829	1	CONNECTOR:RF 50-OHM SCREW ON TYPE	98291	50-045-4610
A7	0340-0119	1	INSULATED FEED THRU:TEFLON	98291	FT-SM-023-P20
A7	05065-0032	1	COVER:SIGNAL AMPLIFIER	28480	05065-0032
A7	05065-0033	1	CHASSIS:SIGNAL AMPLIFIER	28480	05065-0033
A7	05065-2024	1	PLATE:END	28480	05065-2024
A7A1	05065-6011	1	BOARD ASSY:SIGNAL AMPLIFIER	28480	05065-6011
A7A1C1	0180-0116	1	C:FXD ELECT 6.8 UF 10% 35VDCW	56289	150D685X9035B2-DYS
A7A1C2	0180-0106	4	C:FXD ELECT 60 UF 20% 6VDCW	28480	0180-0106
A7A1C3	0160-0340	2	C:FXD MICA 600 PF 1%	28480	0160-0340
A7A1C4	0180-0291	1	C:FXD ELECT 1.0 UF 10% 35VDCW	56289	150D105X9035A2-DYS
A7A1C5	0180-0113	1	C:FXD ELECT TA 100UF +20-15% 30VDCW	56289	109D107C2030T2
A7A1C6	0160-0340		C:FXD MICA 600 PF 1%	28480	0160-0340
A7A1C7	0160-0158	1	C:FXD MY 0.0056 UF 10% 200VDCW	56289	192P56292-PTS
A7A1C8	0140-0220	1	C:FXD MICA 200 PF 1% 300VDCW	28480	0140-0220
A7A1C9	0170-0086	1	C:FXD MY 0.22UF 20% 50VDCW	84411	601PE STYLE 3
A7A1C10	0180-0197	3	C:FXD ELECT 2.2 UF 10% 20VDCW	56289	150D225X9020A2-DYS
A7A1C11	0170-0091	2	C:FXD POLY 0.01213 UF 2% 50VDCW	56289	P146504 PYP
A7A1C12	0170-0090	1	C:FXD POLY 0.0252 UF 1% 50VDCW	56289	P246505 PYP
A7A1C13	0170-0091		C:FXD POLY 0.01213 UF 2% 50VDCW	56289	P146504 PYP
A7A1C14	0180-0160	1	C:FXD ELECT 22 UF 20% 35VDCW	28480	0180-0160
A7A1C15	0150-0093	1	C:FXD CER 0.01 UF +80-20% 100VDCW	72982	801-K800011
A7A1C16	0180-0197		C:FXD ELECT 2.2 UF 10% 20VDCW	56289	150D225X9020A2-DYS
A7A1C17	0160-0168	1	C:FXD MY 0.1 UF 10% 200VDCW	56289	192P10492-PTS
A7A1C18	0180-0098	1	C:FXD ELECT 100 UF 20% 20VDCW	56289	150D107X0020S2-DYS
A7A1C19	0180-0106		C:FXD ELECT 60 UF 20% 6VDCW	28480	0180-0106
A7A1C20	0180-0197		C:FXD ELECT 2.2 UF 10% 20VDCW	56289	150D225X9020A2-DYS
A7A1C21	0180-0106		C:FXD ELECT 60 UF 20% 6VDCW	28480	0180-0106
A7A1C22	0140-0176	1	C:FXD MICA 100 PF 2%	28480	0140-0176
A7A1C23	0140-0209	1	C:FXD MICA 5.0 PF 10%	28480	0140-0209
A7A1C24	0180-0106		C:FXD ELECT 60 UF 20% 6VDCW	28480	0180-0106
A7A1CR1	1902-3203	2	DIODE BREAKDOWN:SILICON 14.7V 5%	28480	1902-3203
A7A1CR2	1902-3203		DIODE BREAKDOWN:SILICON 14.7V 5%	28480	1902-3203
A7A1CR3	1902-0025	1	DIODE,BREAKDOWN:10.0V 5% 400 MW	28480	1902-0025
A7A1CR4	1901-0025	2	DIODE:SILICON 100MA/1V	07263	FD 2387
A7A1CR5	1901-0025		DIODE:SILICON 100MA/1V	07263	FD 2387
A7A1CR6	1902-3149	2	DIODE BREAKDOWN:9.09V 5%	28480	1902-3149
A7A1CR7	1902-3149		DIODE BREAKDOWN:9.09V 5%	28480	1902-3149
A7A1IC1	1820-0058	2	IC:LIN. OP. AMP. 15K MIN.(TO-99)	07263	U5B770939X
A7A1IC2	1820-0058		IC:LIN. OP. AMP. 15K MIN.(TO-99)	07263	U5B770939X
A7A1Q1	1854-0023	5	TSTR:SI NPN(SELECTED FROM 2N2484)	28480	1854-0023
A7A1Q2	1854-0023		TSTR:SI NPN(SELECTED FROM 2N2484)	28480	1854-0023
A7A1Q3	1854-0023		TSTR:SI NPN(SELECTED FROM 2N2484)	28480	1854-0023
A7A1Q4	1854-0023		TSTR:SI NPN(SELECTED FROM 2N2484)	28480	1854-0023
A7A1Q5	1854-0003	3	TSTR:SI NPN(SELECTED FROM 2N1711)	28480	1854-0003
A7A1Q6	1854-0003		TSTR:SI NPN(SELECTED FROM 2N1711)	28480	1854-0003
A7A1Q7	1853-0001	1	TSTR:SI PNP(SELECTED FROM 2N1132)	28480	1853-0001
A7A1Q8	1854-0003		TSTR:SI NPN(SELECTED FROM 2N1711)	28480	1854-0003
A7A1Q9	1854-0023		TSTR:SI NPN(SELECTED FROM 2N2484)	28480	1854-0023
A7A1R1	0757-0965	4	R:FXD FLM 51K OHM 2% 1/8W	28480	0757-0965
A7A1R2	0698-3459	2	R:FXD MET FLM 383K OHM 1% 1/8W	28480	0698-3459
A7A1R3	2100-1659	1	R:VAR WW 5K OHM 10% TYPE P 1W	28480	2100-1659
A7A1R4	0757-0965		R:FXD FLM 51K OHM 2% 1/8W	28480	0757-0965
A7A1R5	0698-3459		R:FXD MET FLM 383K OHM 1% 1/8W	28480	0698-3459
A7A1R6	0757-0965		R:FXD FLM 51K OHM 2% 1/8W	28480	0757-0965
A7A1R7	0757-0903	1	R:FXD MET FLM 130 OHM 2% 1/4W	28480	0757-0903
A7A1R8	0757-0915	2	R:FXD FLM 430 OHM 2% 1/8W	28480	0757-0915
A7A1R9	0757-0915		R:FXD FLM 430 OHM 2% 1/8W	28480	0757-0915
A7A1R10	0757-0965		R:FXD FLM 51K OHM 2% 1/8W	28480	0757-0965
A7A1R11	0757-0928	2	R:FXD FLM 1.5K OHM 2% 1/8W	28480	0757-0928
A7A1R12	0757-0893	2	R:FXD FLM 51 OHM 2% 1/8W	28480	0757-0893
A7A1R13	0757-0931	1	R:FXD FLM 2K OHM 2% 1/8W	28480	0757-0931
A7A1R14	0757-0199	1	R:FXD MET FLM 21.5K OHM 1% 1/8W	28480	0757-0199
A7A1R15	0757-0959	1	R:FXD FLM 30K OHM 2% 1/8W	28480	0757-0959
A7A1R16	0757-0457	2	R:FXD MET FLM 47.5K OHM 1% 1/8W	28480	0757-0457
A7A1R17	0757-0976	3	R:FXD FLM 150K OHM 2% 1/8W	28480	0757-0976
A7A1R18	0757-0976		R:FXD FLM 150K OHM 2% 1/8W	28480	0757-0976
A7A1R19	2100-1761	1	R:VAR WW 10K OHM 5% TYPE V 1W	28480	2100-1761
A7A1R20	0757-0926	1	R:FXD FLM 1.2K OHM 2% 1/8W	28480	0757-0926
A7A1R21	2100-1775	1	R:VAR WW 5K OHM 5% TYPE H 1W	28480	2100-1775
A7A1R22	0757-0948	3	R:FXD FLM 10K OHM 2% 1/8W	28480	0757-0948
A7A1R23	0757-0457		R:FXD MET FLM 47.5K OHM 1% 1/8W	28480	0757-0457
A7A1R24	0757-0939	1	R:FXD FLM 4.3K OHM 2% 1/8W	28480	0757-0939
A7A1R25	0757-0924	6	R:FXD MET FLM 1K OHM 2% 1/8W	28480	0757-0924
A7A1R26	0757-0976		R:FXD FLM 150K OHM 2% 1/8W	28480	0757-0976

See introduction to this section for ordering information

Table 7-9. A7 AC Amplifier Assembly Replaceable Parts (Continued)

Reference Designation	HP Part Number	Qty	Description	Mfr Code	Mfr Part Number
A7A1R27	0757-0924		R:FXD MET FLM 1K OHM 2% 1/8W	28480	0757-0924
A7A1R28	0757-0938	1	R:FXD FLM 3.9K OHM 2% 1/8W	28480	0757-0938
A7A1R29	0757-0948		R:FXD FLM 10K OHM 2% 1/8W	28480	0757-0948
A7A1R30	0757-0935	1	R:FXD FLM 3K OHM 2% 1/8W	28480	0757-0935
A7A1R31	0757-0900	2	R:FXD MET FLM 100 OHM 2% 1/8W	28480	0757-0900
A7A1R32	0757-0924		R:FXD MET FLM 1K OHM 2% 1/8W	28480	0757-0924
A7A1R33	0757-0924		R:FXD MET FLM 1K OHM 2% 1/8W	28480	0757-0924
A7A1R34	0698-3129	1	R:FXD DEPC 1.00 MEGOHM 1% 1/8W	28480	0698-3129
A7A1R36	0757-0949	1	R:FXD FLM 11K OHM 2% 1/8W	28480	0757-0949
A7A1R37	0757-0971	1	R:FXD FLM 91K OHM 2% 1/8W	28480	0757-0971
A7A1R38	0757-0921	1	R:FXD MET FLM 750 OHM 2% 1/8W	28480	0757-0921
A7A1R39	0757-0948		R:FXD FLM 10K OHM 2% 1/8W	28480	0757-0948
A7A1R40	0757-0900		R:FXD MET FLM 100 OHM 2% 1/8W	28480	0757-0900
A7A1R41	0757-0969	2	R:FXD FLM 75K OHM 2% 1/8W	28480	0757-0969
A7A1R42	0757-0924		R:FXD MET FLM 1K OHM 2% 1/8W	28480	0757-0924
A7A1R43	0757-0924		R:FXD MET FLM 1K OHM 2% 1/8W	28480	0757-0924
A7A1R44	0757-0941	2	R:FXD FLM 5.1K OHM 2% 1/8W	28480	0757-0941
A7A1R45	0757-0928		R:FXD FLM 1.5K OHM 2% 1/8W	28480	0757-0928
A7A1R46	0757-0941		R:FXD FLM 5.1K OHM 2% 1/8W	28480	0757-0941
A7A1R47	0757-0969		R:FXD FLM 75K OHM 2% 1/8W	28480	0757-0969
A7A1R48	0757-0893		R:FXD FLM 51 OHM 2% 1/8W	28480	0757-0893

Figure 7-13
A7 AC AMPLIFIER SCHEMATIC DIAGRAM

(See Page 7-35)

Figure 7-12. A7 AC Amplifier

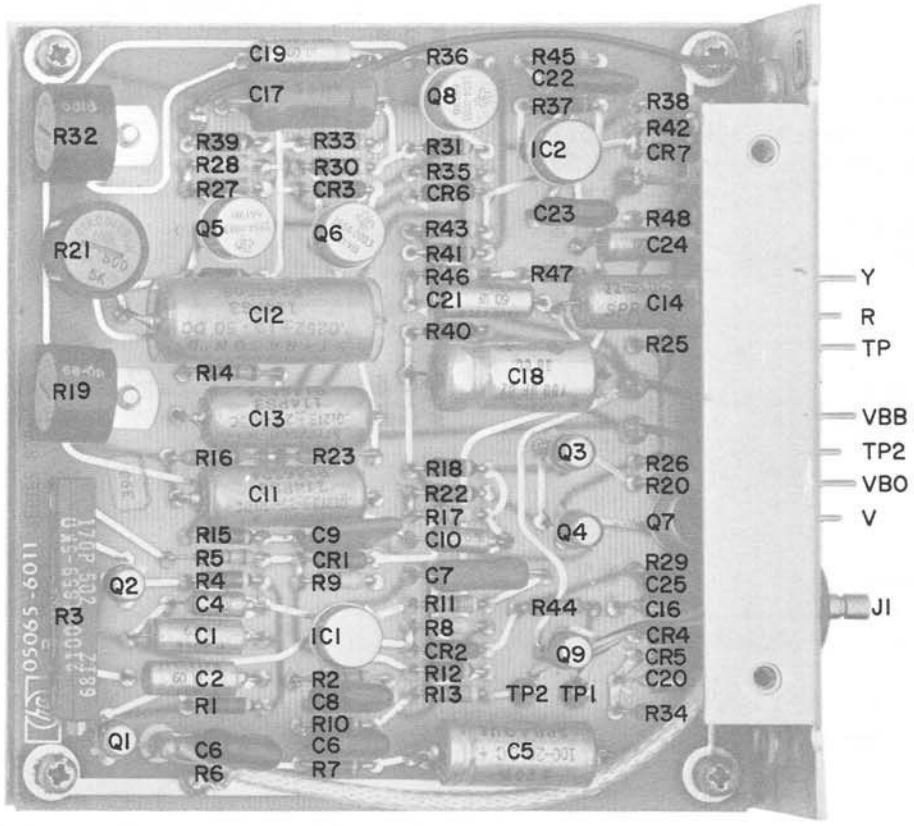

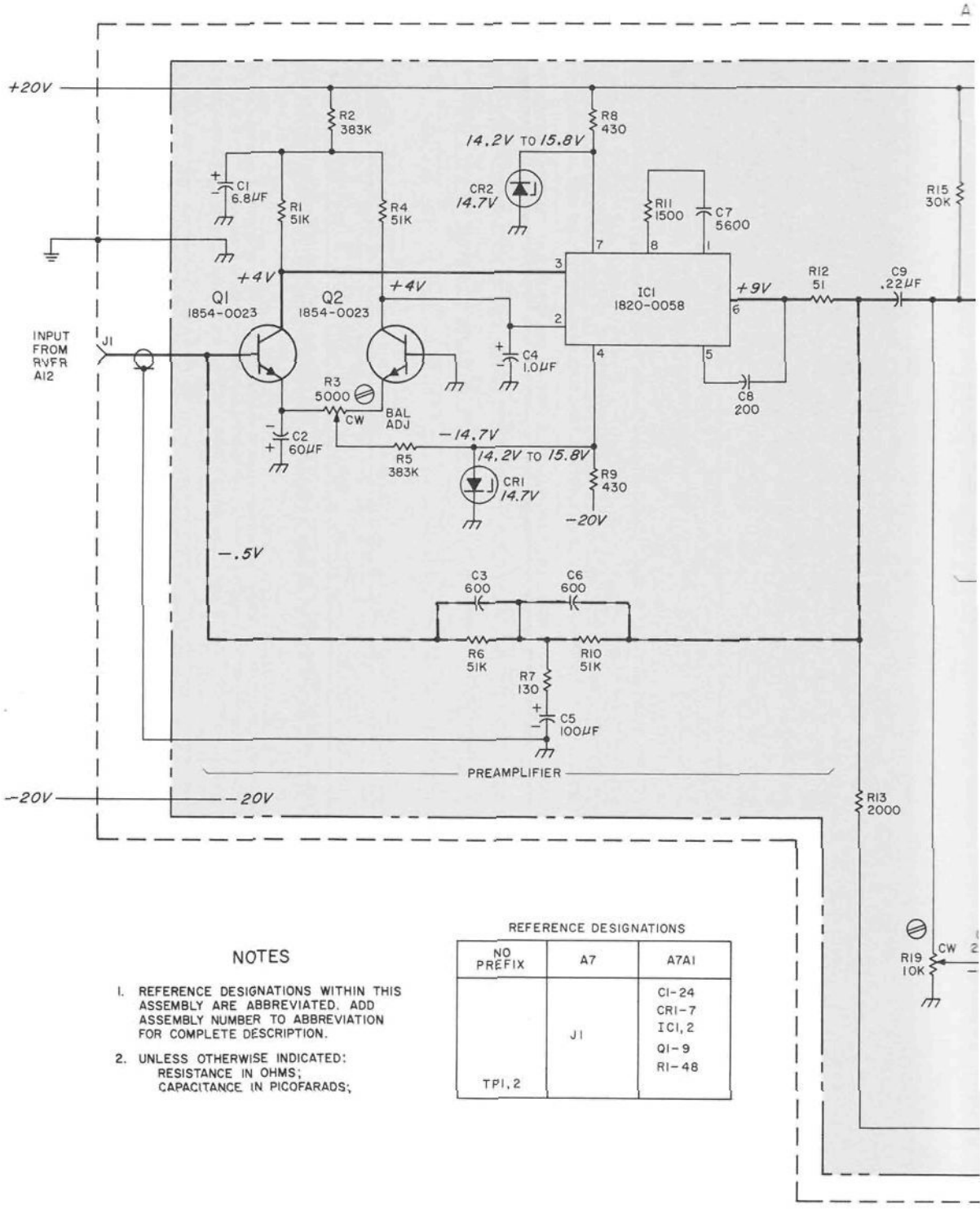

NOTES

1. REFERENCE DESIGNATIONS WITHIN THIS ASSEMBLY ARE ABBREVIATED. ADD ASSEMBLY NUMBER TO ABBREVIATION FOR COMPLETE DESCRIPTION.
2. UNLESS OTHERWISE INDICATED:
   RESISTANCE IN OHMS;
   CAPACITANCE IN PICOFARADS;

REFERENCE DESIGNATIONS

NO PREFIX	A7	A7A1
TP1, 2	J1	C1-24 CR1-7 IC1, 2 Q1-9 R1-48

A7 AC AMPLIFIER ASSEMBLY (05065-6010) (NOTE 1)

A7A1 AC AMPLIFIER BOARD (05065-6011)

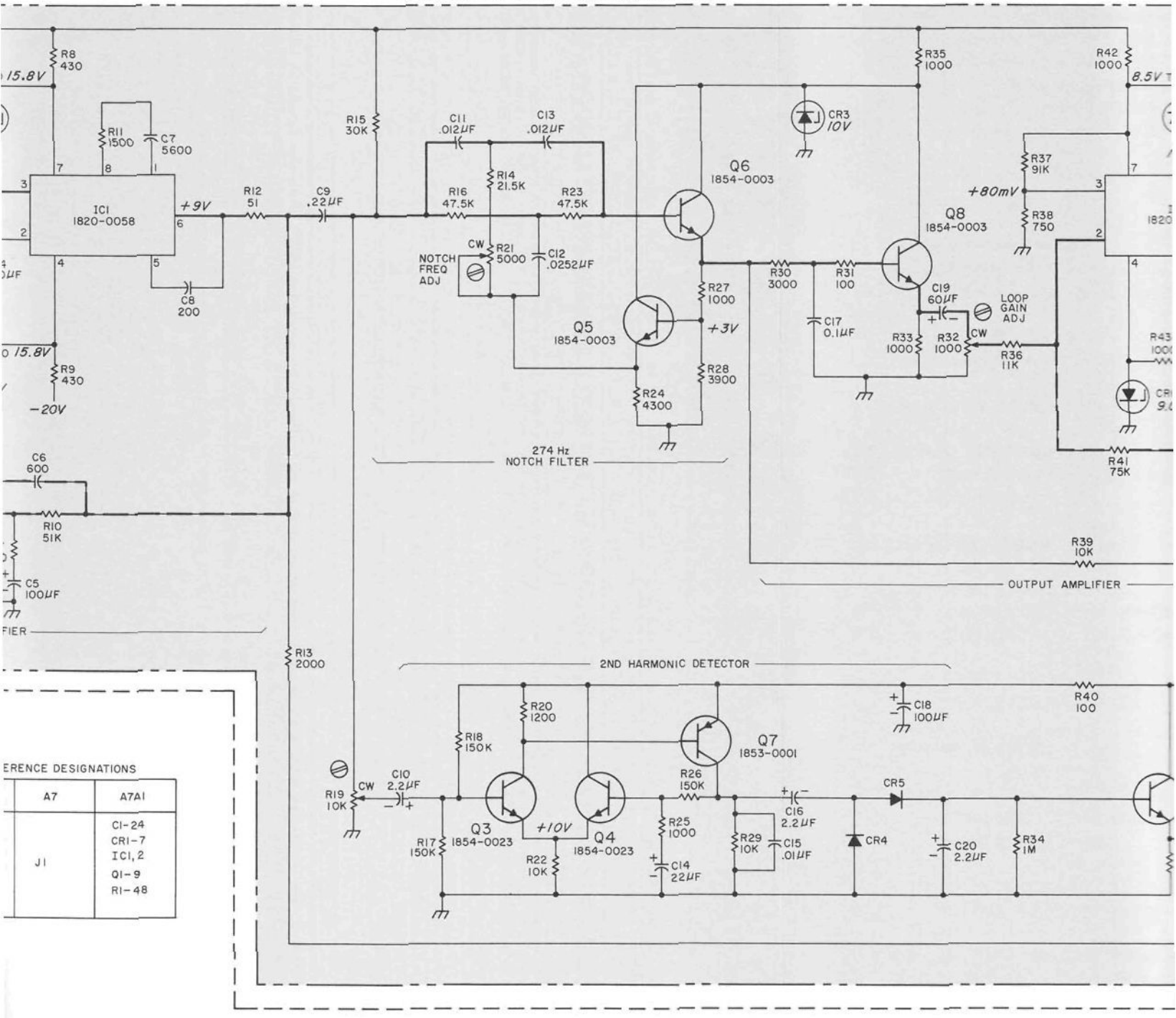

ERENCE DESIGNATIONS

A7	A7A1
J1	C1-24 CR1-7 IC1, 2 Q1-9 R1-48

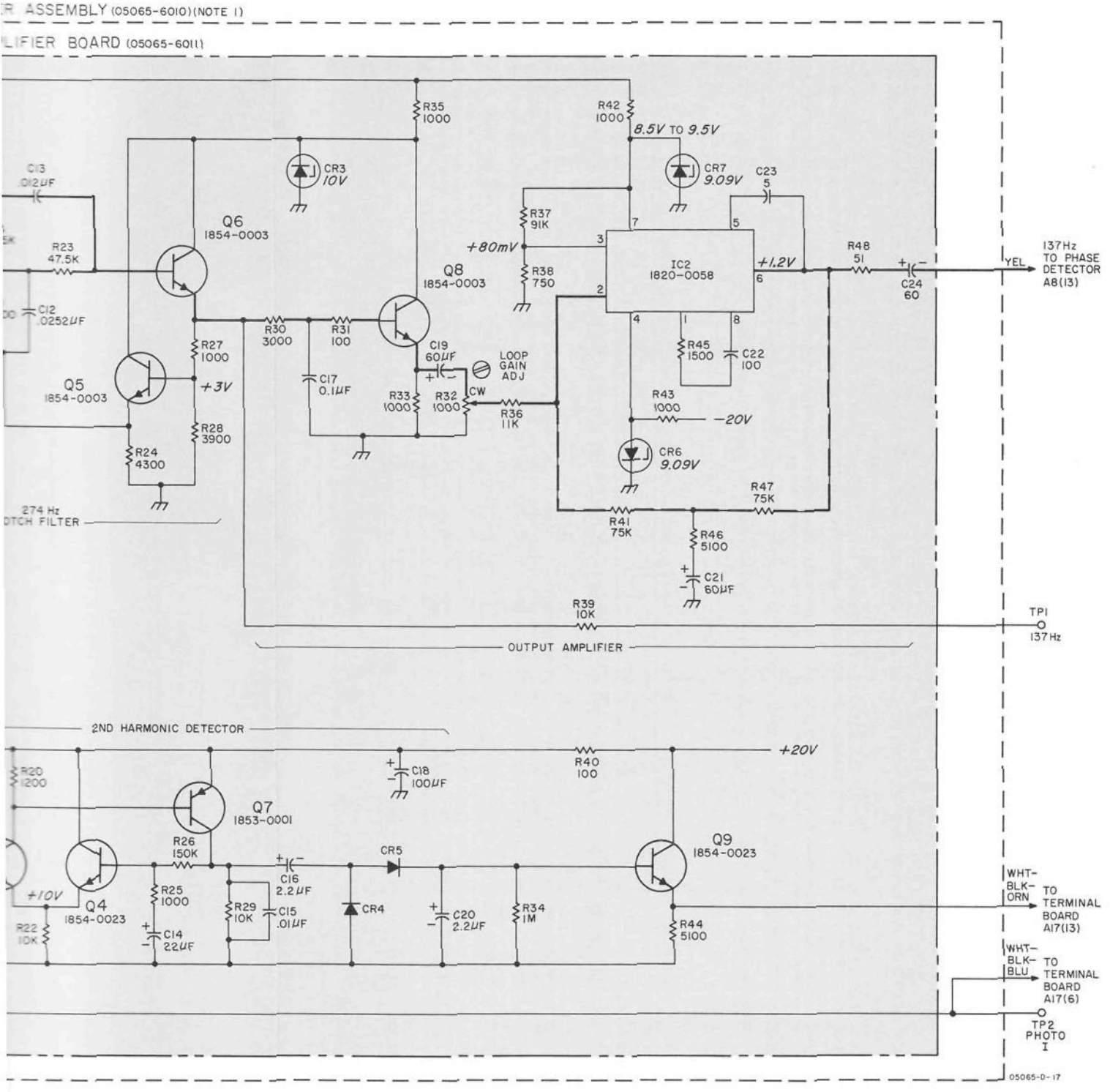

Figure 7-13. A7 AC Amplifier Schematic Diagram

CHANGE 14 (1104):

Page 6-3, Table 6-2 Replaceable Parts:
Change A1A1C34 from 1000pf to 500pf 0140-0234 C:FXD MICA 500 PF 1%; 28480; 0140-0234.
Page 8-19, Figure 8-9 Sheet 2 of 2 Schematic Diagram:
Change the value of A1A1C34 from 1000PF to 500PF
Page 6-14, Table 6-2 Replaceable Parts:
Change A11CR7 and CR8 to 1901-0049 DIODE: SILICON 50PIV; 28480 1901-0049
Page 6-18, Table 6-2 Replaceable Parts:
Change F1 and F2 FUSEHOLDER part numbers from 1400-0085 to 1400-0084.

CHANGE 15 (1220):

Page 6-7, Table 6-2:
Change A3A1R1 from 0757-0924 to 0757-0907 R:FXD FLM 200 OHMS 2% 1/8W; 28480; 0757-0907.

Page 8-25, Figure 8-11:
Change A3A1R1 to 200 ohms.

CHANGE 16 (1320):

Page 6-19, Table 6-2:
Change XA2 through XA15 from 1251-0160 to 1251-0135.

CHANGE 17 (1340):

Page 6-18, Table 6-2:
Change A15C3 from 0140-0196 to 0160-2204 C:FXD MICA 100PF 5%; 72136; RDM15F101-J3C.

Page 8-71, Figure 8-27:
Change A15C3 from 150PF to 100PF.

CHANGE 18 (1416):

Page 1-4, Table 1-3:
Change CLOCK MOVEMENT to read: 24- hour with sweep second hand.

Page 3-9, paragraph 3-21:
Replace with the following:

3-21. The Time Standard Option includes a mechanical clock movement indicating time in hours, minutes, and seconds. FAST and STOP pushbuttons on the divider module (Figure 3-10) permit setting the clock movement to the nearest second. The hour and minute adjustment is the knob located on the back of the clock movement. To set, remove the top cover; then reach in and pull out knob to engage and set the clock. Push this knob back in to release. The SYNC pushbutton allows the 5065A to be synchronized to an external clock pulse.

Page 3-9, paragraph 3-25(f):
Replace with:

When the clock pulse is synchronized, the mechanical clock in the 5065A will run in step. The set knob at the rear of the clock provides coarse adjustment of hours and minutes. The FAST and SLOW switches on the A5 module provide a way to speed up or stop the clock for adjustment to the nearest second.

Page 3-12, paragraph 3-28:
Replace "Setting the Clock" with:

3-28. Setting the Mechanical Clock

a. To mechanically set the clock, remove the top cover for access. Use the set knob at the rear of the clock; pull out to engage and set.

b. The FAST and STOP pushbuttons on A5 Assembly are accessible with the top cover removed.

10 PPS is routed to the clock with the FAST pushbutton depressed. The STOP pushbutton disconnects the clock drive.

Page 3-15, Figure 3-11:
Replace Figure 3-10 with Figure 7-14.

Page 4-2, paragraph 4-17:
Replace with the following paragraph:

4-17. Additional A5 controls are the internal FAST, STOP, and SYNC switches. The FAST pushbutton speeds up clock movement by replacing the 1 PPS clock drive with 10 PPS. The STOP pushbutton shorts the 1 PPS clock drive to ground to stop the clock. To synchronize the 1 PPS output with a reference pulse, the SYNC pushbutton is depressed for at least 1-second and then released. If a sync pulse is connected to the rear SYNC INPUT jack, one reference pulse will enter the synchronizing circuits during the 1-second interval. This pulse will reset the digital divider. The output 1 PPS "tick" pulse from the 1 PPS front panel jack will then be in sync with the reference pulse.

Page 4-3, paragraph 4-18:
The sentence beginning
"The other 1 PPS input "(normally 1 PPS but 10 PPS with A5 FAST pushbutton depressed)" . . . .

Figure 7-14. Top Operating Controls

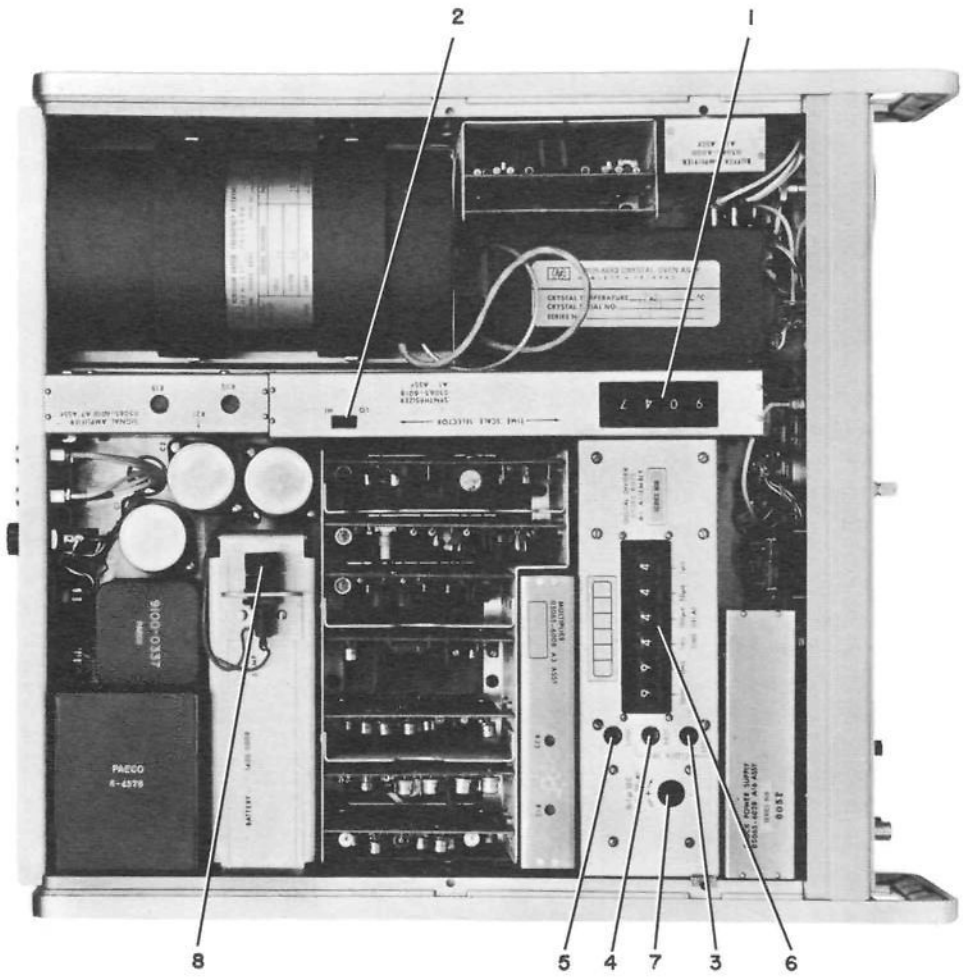

1. Synthesizer TIME CLOCK SELECTOR thumbwheel switch: selects synthesized frequency.

2. Synthesizer TIME SCALE SELECTOR HI-LO switch: used with thumbwheel switch to select synthesized frequency.

3. CLOCK SET STOP switch (Option 001 only): digital clock is stopped when switch is depressed, starts when released.

4. CLOCK SET FAST switch (Option 001 only): digital clock second hand is accelerated when switch is depressed, resumes normal operation when released.

5. Clock SYNC switch (Option 001 only): Synchronizes digital clock with an external clock when depressed; clock remains synchronized when released.

6. Clock TIME DELAY thumbwheel switch (Option 001 only): selects time delay between an external reference pulse and the internal 1 pulse-per-second clock pulse. Adjustable in decade steps from 1 μs to 1 sec.

7. 0-1 μSEC TIME DELAY control (Option 001 only): Allows continuous adjustment of clock pulse delay over any 1 μsec range.

8. Battery fuse: removed momentarily to disconnect optional standby battery from circuit for storage or shipment. Battery will remain disconnected after fuse is replaced.

Page 6-2, Figure 6-1:
Change: Panel: Left Insert; to 05065-0011. Door Panel; to 05065-0015. Standard Panel Insert; to 05065-0012. Panel Option 002 Insert; to 05065-0014.

Page 6-7, Table 6-2
Change A3A1Q9 to 1854-0091 TSTR:SI NPN; 28480; 1854-0091.

CHANGE 19 (1420):

Page 6-26, Table 6-4:
Add A5B1, 05061-6085 Clock Assy: Opt. 001-003; 28480;05061-6085
Change 05065-0048 to Digital Divider 05065-0037.
Change A5,05065-6084 to Module Assy Digital Divider 05065-6025.
Add A5S1 and A5S3 SWITCH: PUSHBUTTON SPST; 82389;961 LESS HWD (both switches identical).

Page 6-27, Table 6-5:
Change A16 from 05065-6085 to 05065-6028.
Change A16A1 from 05065-6082 to 05065-6029.
Add the following components:
A16A1IC1; 1820-0313; IC; DTL RS/JK CLOCKED F/F; 28480; 1820-0313
A16A1Q11 and Q12; TSTR: SI NPN; 80131; 2N708.
A16A1CR13 and CR14; 1902-0554; DIODE BREAK-DOWN: 10V 1W; 28480; 1902-0554.

Page 6-28, Table 6-5:
Add Table 7-10 resistor parts list to A16 (R21 to R26):

Replace Digital Divider Assy A5 (sheet 1 of 3) with Figure 7-15.

Page 8-33, Figure 8-13:
Change A5, Digital Divider, Assy, from 05065-6084 to 05065-6025.

Page 8-35, Figure 8-15: Change A5 Digital Divider from 05065-6084 to 05065-6025.

Page 8-37, Figure 8-15: Change A5 Digital Divider Assy from 05065-6084 to 05065-6025.

Page 8-73, Figure 8-28:
Change A16 Digital Divider Assy from 05065-6085 to 05065-6029.
Change A16A1, 05065-6082 to 05065-6029
Replace A16A1 Schematic Diagram with Figure 7-16 A16A1 Digital Divider Schematic.

Page 8-69, Figure 8-26:
Add resistor A14R15 from the cathode of CR2 to ground (value of 5100 ohms). Change the value of A14R12 to 1000 ohms and A14R16 to 150K ohms.

Page 6-16, Table 6-2:
Add A14R15 0757-0941; R:FXD FLM 5.1K OHMS 2% 1/8W; 28480; 0757-0941.
Change A14R12 to 0757-0924 R:FXD MET FLM OHM 2% 1/8W; 28480; 0757-0924.
Change A14R16 to 0757-0976 R:FXD FLM 150K OHM 2% 1/8; 28480; 0757-0976.

Add the following Digital Clock text for LED Clock Series 1532A:

DIGITAL CLOCK THEORY OF OPERATION

General

The digital clock is a solid-state 24 hour clock with a seven segment LED (light emitting diode) display. It indicates time in hours, minutes and seconds in synchronism with the 5065A generated 1 PPS signal. Time may be set and synchronized using the HOLD/SLOW/FAST pushbuttons of the LED clock.

The required inputs which enable the lock to operate are connected to the clock by five wires. These are:

1. Unregulated +28 Vdc from the 5065A used to generate a regulated +5 Vdc and used exclusively to drive the display.

Table 7-10. A16 Resistor Parts List

Reference Designation	HP Part Number	Qty	Description	Mfr Code	Part Number
A16A1R21	0757-0931	2	R: FXD FLM 2K OHM 2% 1/8W	28480	0757-0931
A16A1R22	0757-0931		R: FXD FLM 2K OHM 2% 1/8W	28480	0757-0931
A16A1R23	0757-0924	2	R: FXD MET FLM 1K OHM 2% 1/8W	28480	0757-0924
A16A1R24	0757-0924		R: FXD MET FLM 1K OHM 2% 1/8W	28480	0757-0924
A16A1R25	0757-0920		R: FXD FLM 680 OHM 2% 1/8W	28480	0757-0920
A16A1R26	0757-0920		R: FXD FLM 680 OHM 2% 1/8W	28480	0757-0920

Figure 7-15
A5 DIGITAL DIVIDER ASSEMBLY (OPTION 001)

(See Page 7-39)

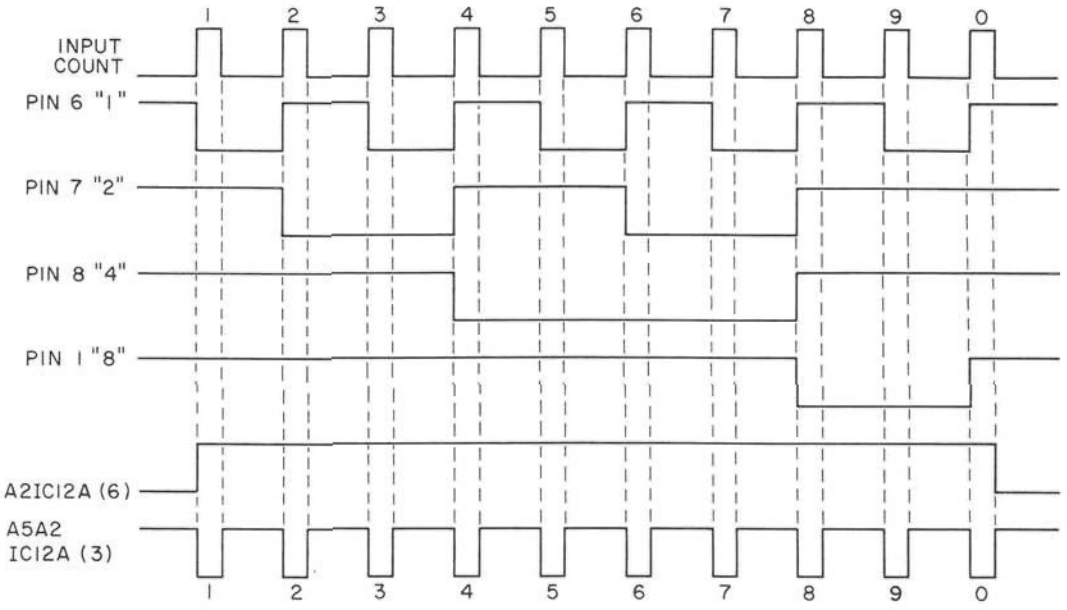
1 2 3 4 5 6 7 8 9 0
INPUT COUNT
PIN 6 "1"
PIN 7 "2"
PIN 8 "4"
PIN 1 "8"
A2IC12A (6)
A5A2 IC12A (3)
1 2 3 4 5 6 7 8 9 0

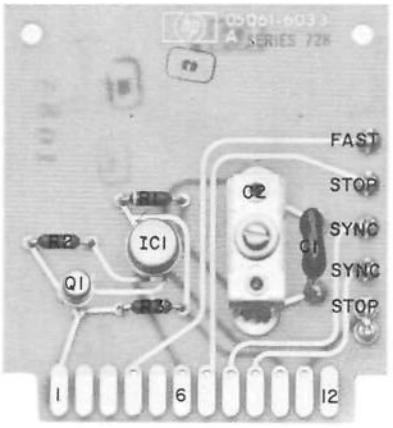
FAST
STOP
SYNC
SYNC
STOP
IC1
Q1
C2
C1
1
6
12

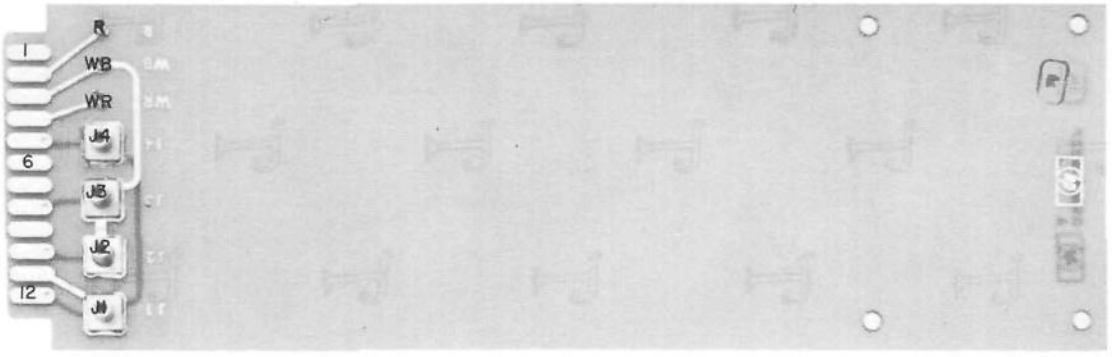
R
WB
WR
1
6
12
J4
J3
J2
J1

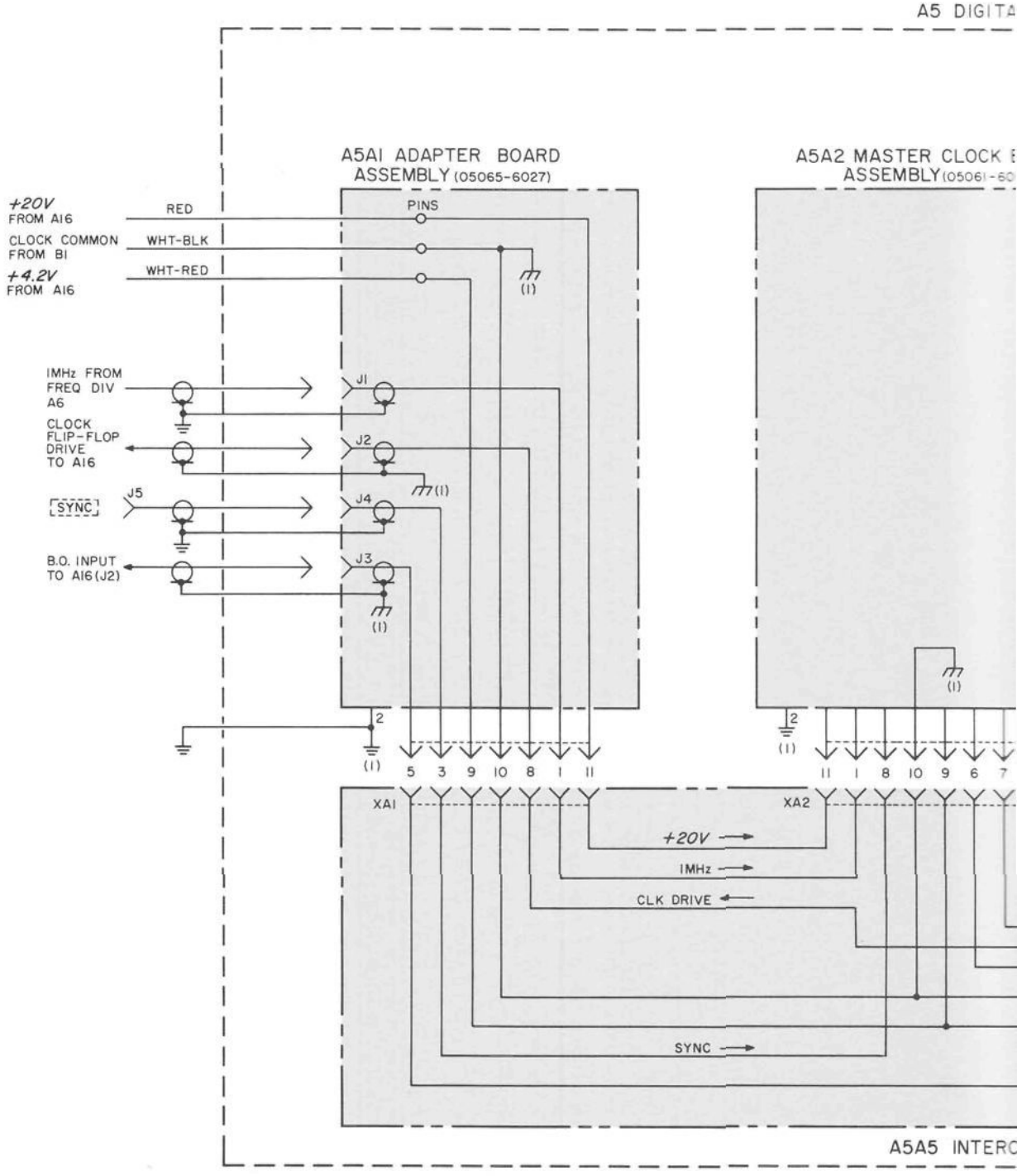

NOTES

1. REFERENCE DESIGNATIONS WITHIN THIS ASSEMBLY ARE ABBREVIATED. ADD ASSEMBLY NUMBER TO ABBREVIATION FOR COMPLETE DESCRIPTION.
2. UNLESS OTHERWISE INDICATED:
   RESISTANCE IN OHMS;
   CAPACITANCE IN PICOFARADS;
3. ASTERISK (*) INDICATES SELECTED COMPONENT, AVERAGE VALUES SHOWN.

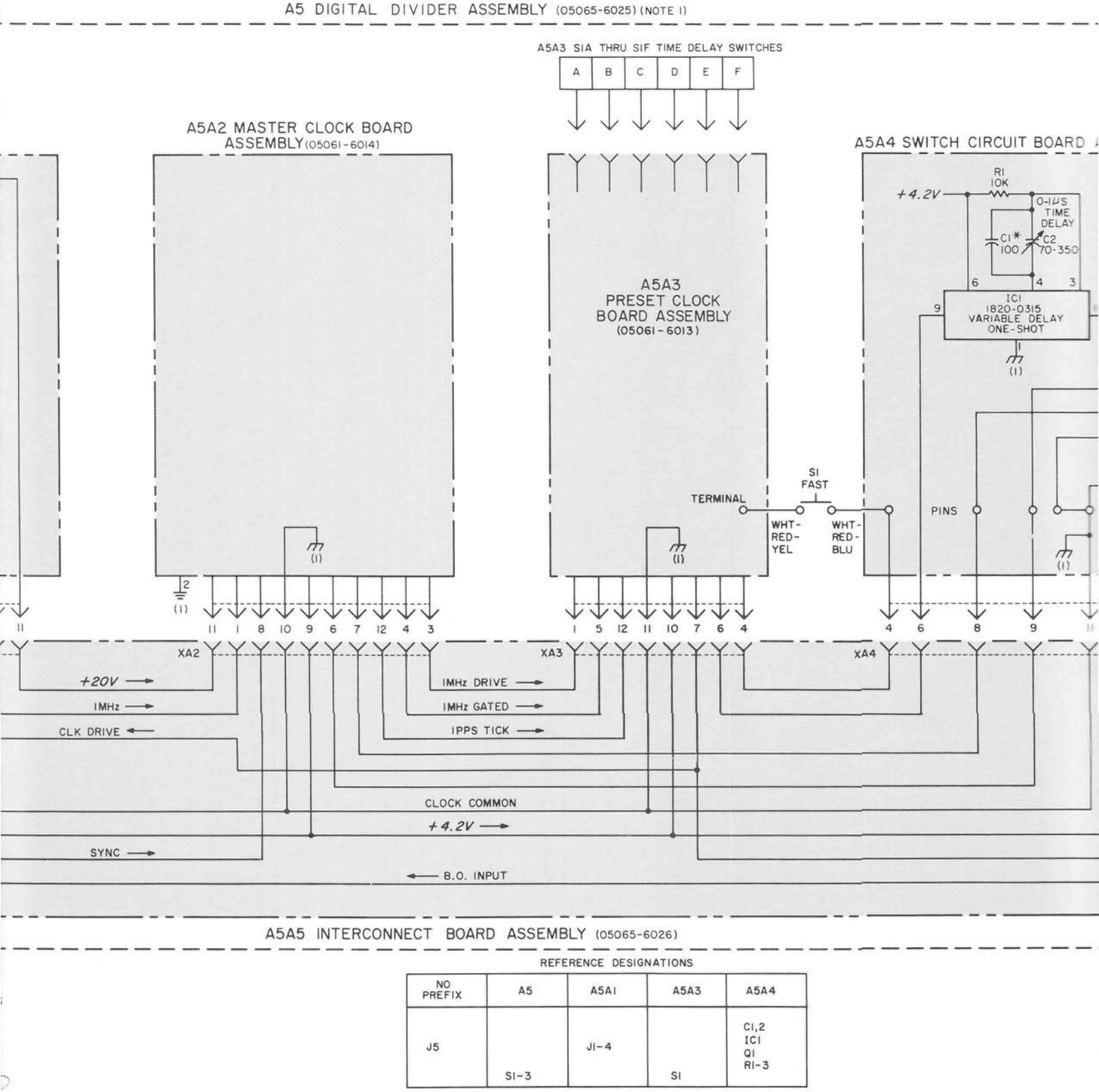

REFERENCE DESIGNATIONS

NO PREFIX	A5	A5A1	A5A3	A5A4
J5	S1-3	J1-4	S1	C1,2 IC1 Q1 R1-3

Fig

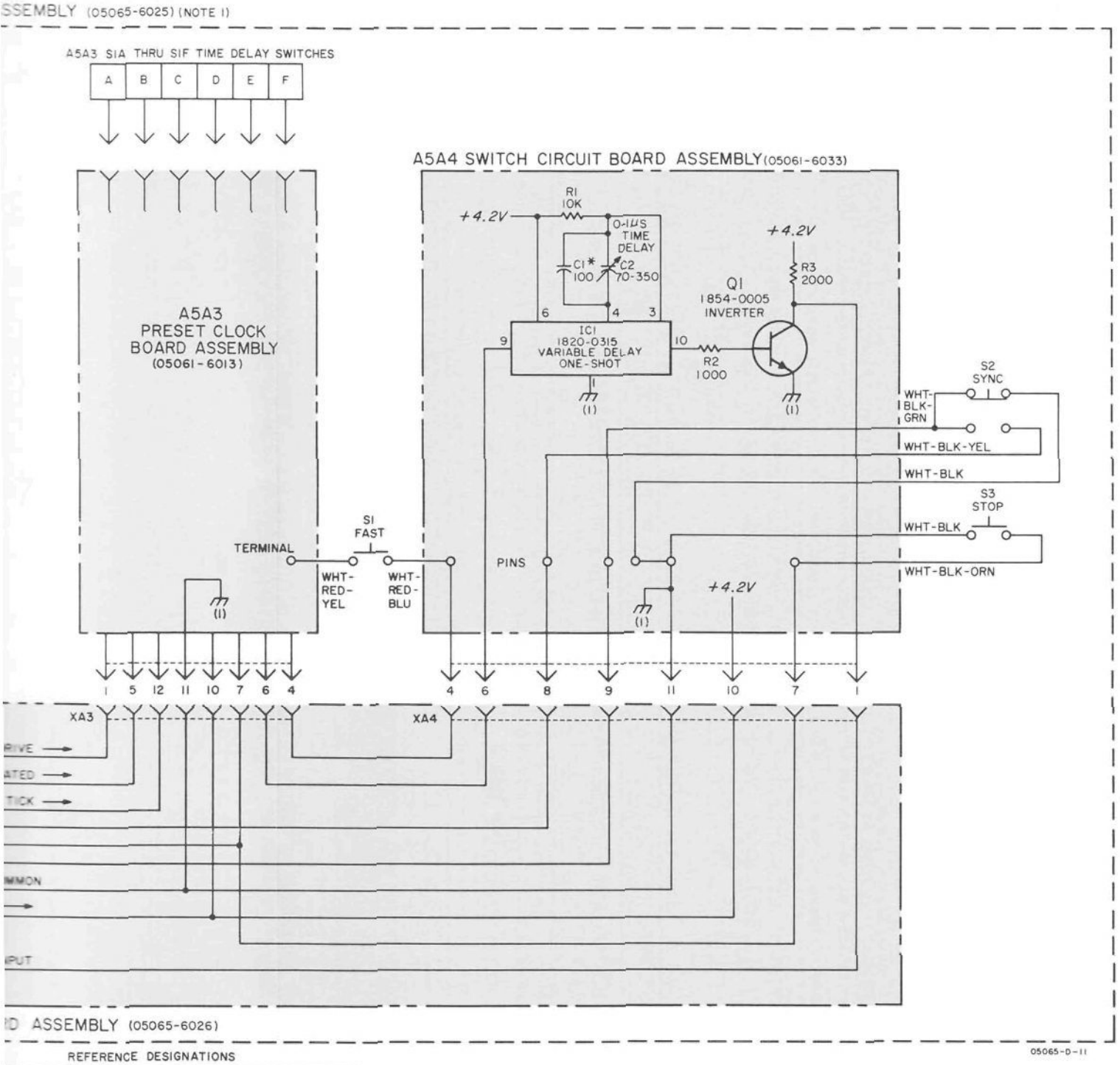

REFERENCE DESIGNATIONS

A5	A5A1	A5A3	A5A4
S1-3	J1-4	S1	C1,2 IC1 Q1 R1-3

Figure 7-15. A5 Digital Divider Assembly (Option 001)

Figure 7-16
A16 DIGITAL DIVIDER POWER SUPPLY ASSEMBLY

(See Page 7-41)

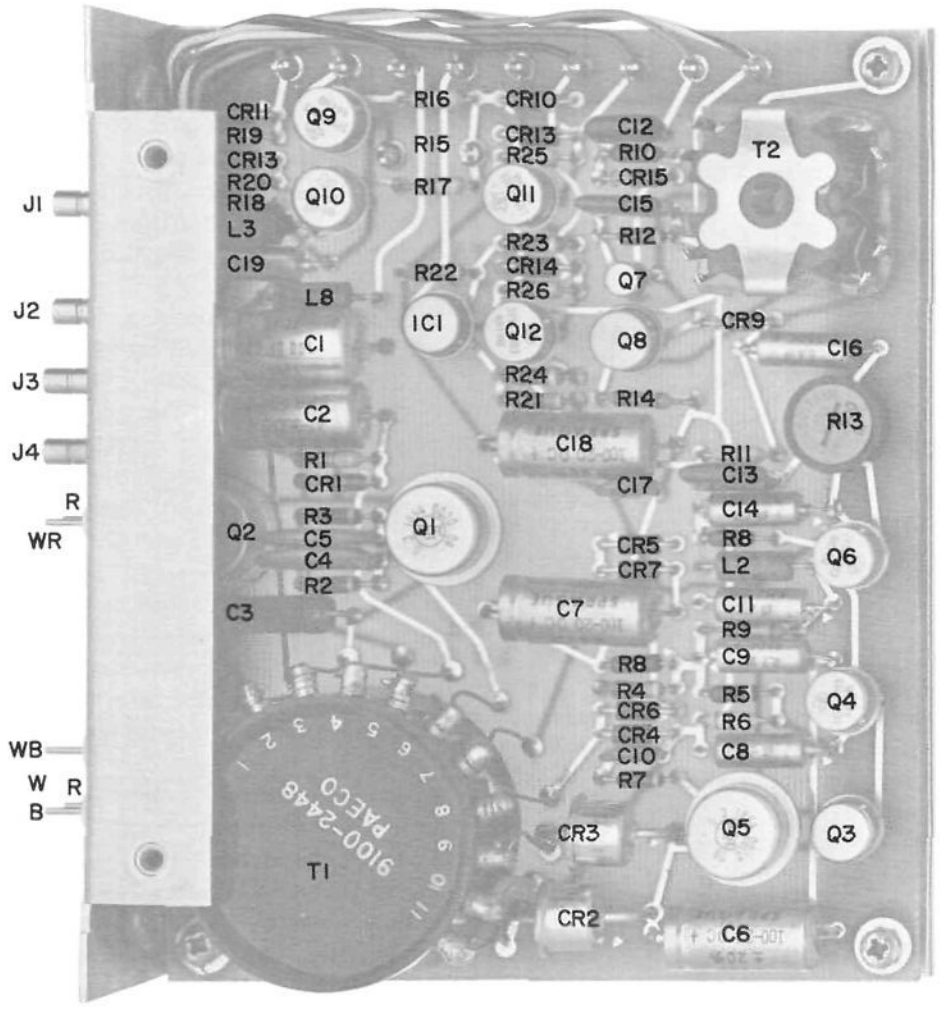
CRII
RI9
CRI3
R20
RI8
L3
CI9
L8
CI
C2
RI
CRI
R3
C5
C4
R2
C3
Q2
Q1
Q9
Q10
RI6
RI5
RI7
R22
ICI
CRI0
CRI3
R25
Q11
R23
CRI4
R26
Q12
R24
R21
CI8
CI7
C7
R8
R4
CR6
CR4
CIO
R7
CR3
CR2
CI2
RIO
CRI5
CI5
RI2
Q7
Q8
R14
CR5
CR7
CR9
CI6
RI3
RII
CI3
CI4
R8
L2
CII
R9
C9
R5
R6
C8
C6
T2
Q5
Q6
Q4
Q3
J1
J2
J3
J4
R
WR
WB
W
R
B
T1
9100-2448
PAECO

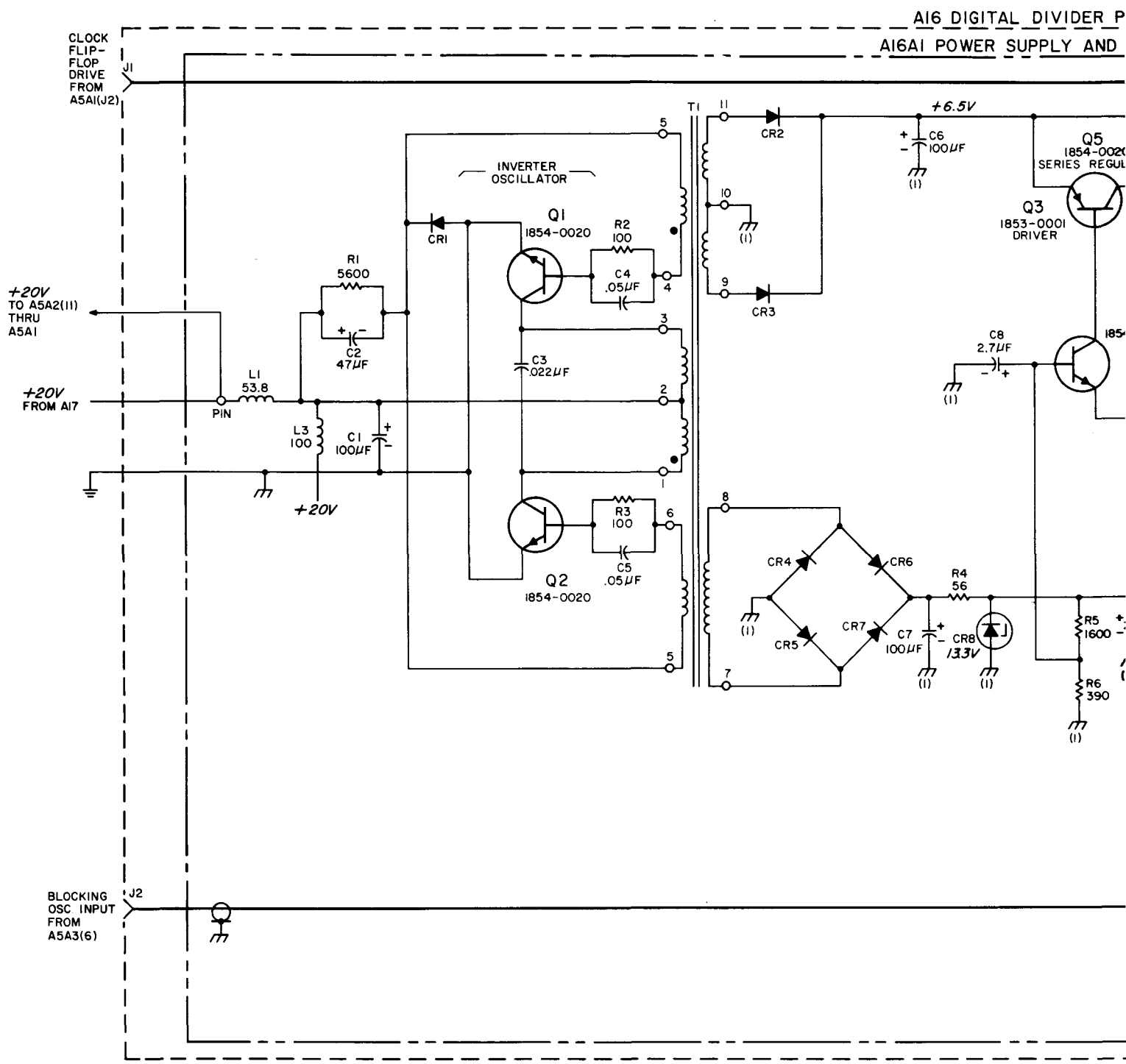

NOTES

1. REFERENCE DESIGNATIONS WITHIN THIS ASSEMBLY ARE ABBREVIATED. ADD ASSEMBLY NUMBER TO ABBREVIATION FOR COMPLETE DESCRIPTION.
2. UNLESS OTHERWISE INDICATED:
   RESISTANCE IN OHMS;
   CAPACITANCE IN PICOFARADS;
   INDUCTANCE IN MICROHENRIES
3. ASTERISK (*) INDICATES SELECTED COMPONENT, AVERAGE VALUES SHOWN

NO PREFI
J14

A16 DIGITAL DIVIDER POWER SUPPLY ASSEMBLY (05065-6028) (NOTE 1) SERIES 1104

A16A1 POWER SUPPLY AND IPPS OUTPUT BOARD ASSEMBLY (05065-6029)

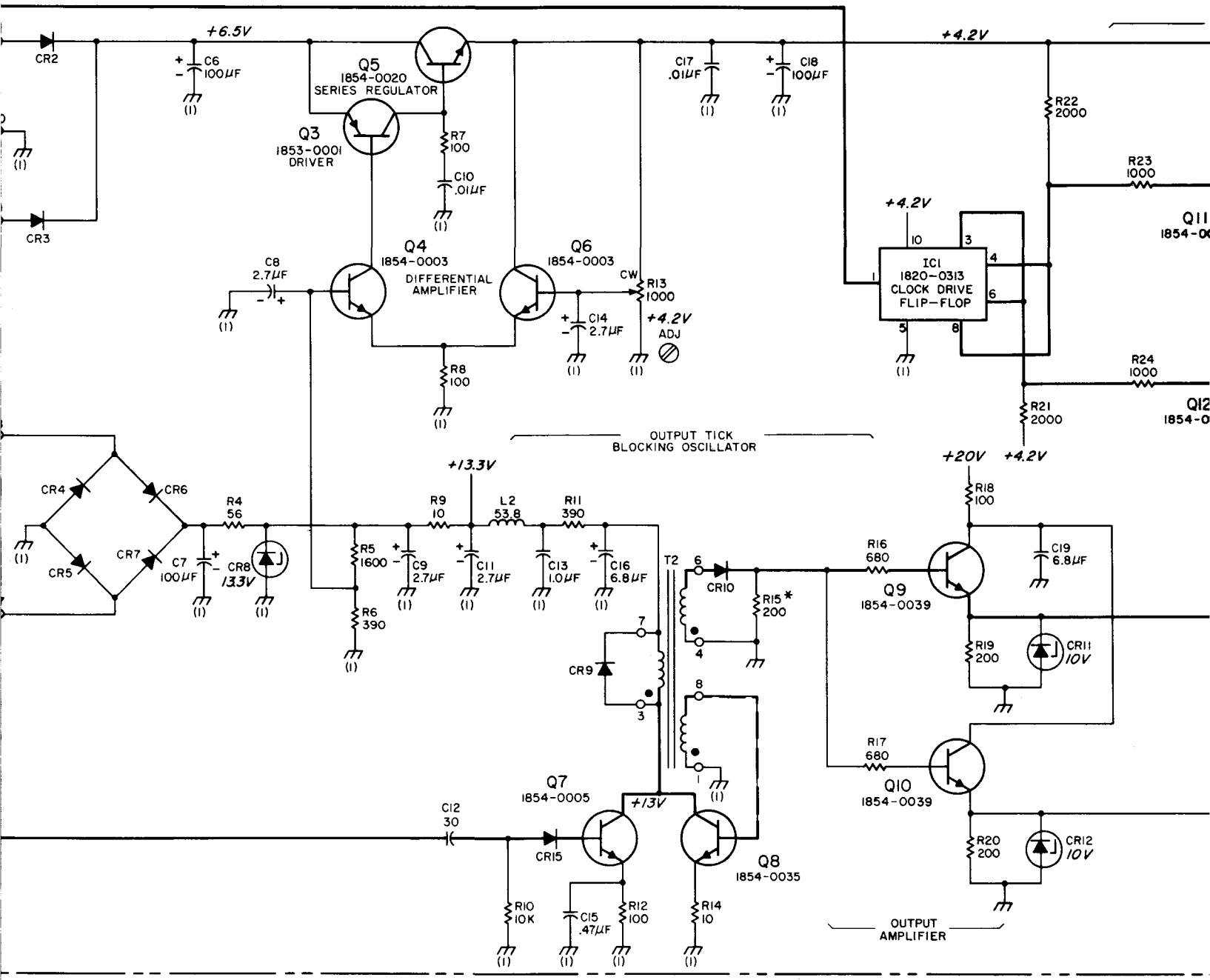

REFERENCE DESIGNATIONS

NO PREFIX	A16	A16A1
J14	J1-4	C1-19 CR1-15 IC1 L1-3 Q1-12 R1-26 T1,2

Figur

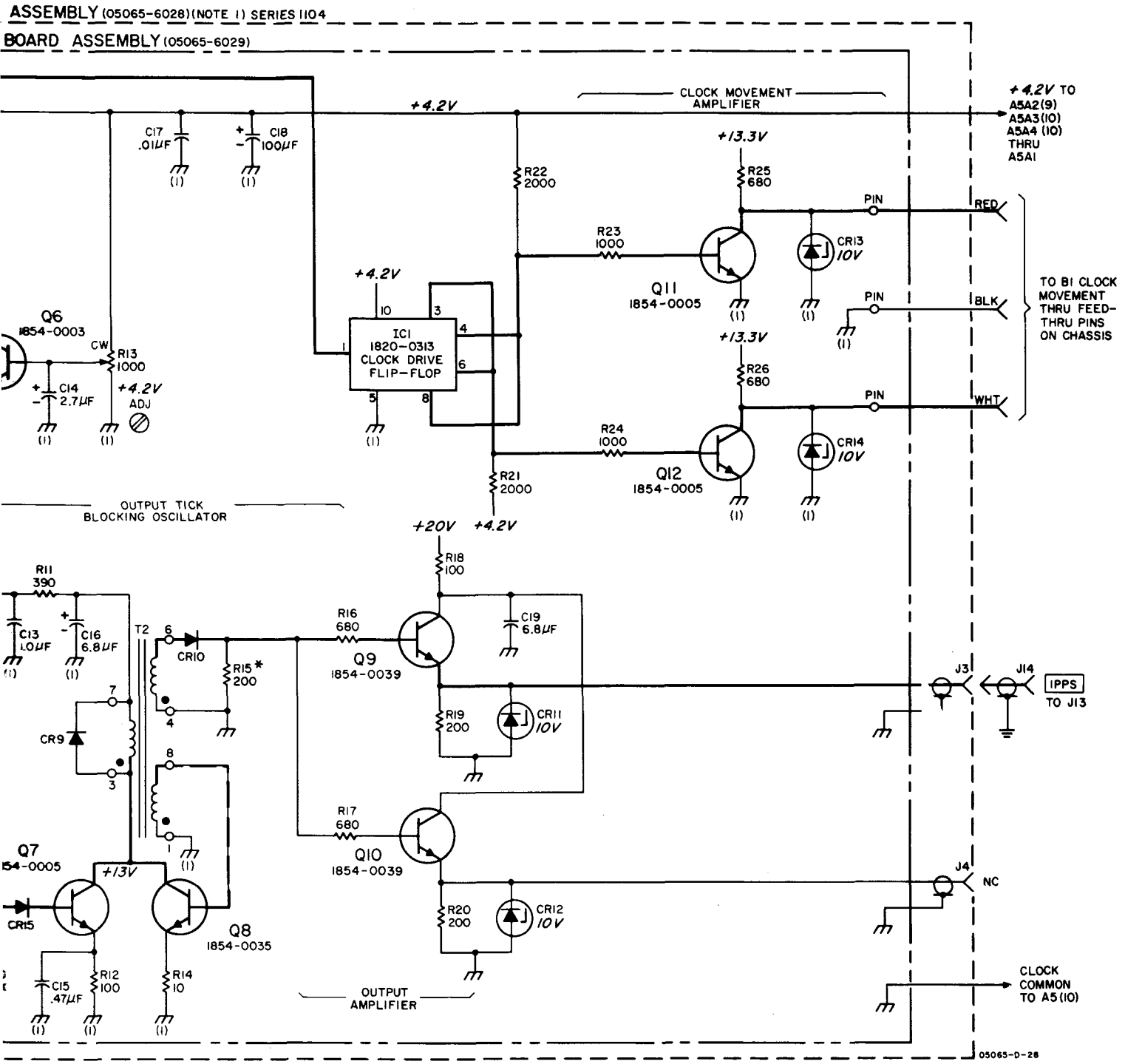

A16A1
C1-19 CR1-15
IC1 L1-3 Q1-12 R1-26 T1,2

Figure 7-16. A16 Digital Divider Power Supply Assembly

2. Unregulated +12 Vdc from the 5065A used exclusively to operate the CMOS circuits in the clock.
3. 1 PPS signal from the 5065A used to synchronize the clock and increment the display.
4. AC line sense signal from A2(9) turns off the display portion if instrument AC power fails or is removed. To display time, when AC power is not available, the clock front-panel STANDBY READ must be pressed.
5. 1 PPS and 12 Vdc common.Circuit ground connects to the chassis through the LED digital clock circuits.

Three circuit boards make up the A19 LED digital clock. These are:

1. A1, +5V switching regulator. This is the rear board.
2. A2, 50 Hz logic. This is the middle board.
3. A3, clock display. This is the front board.

A1, +5V Switching Regulator

This assembly is a 9 kHz to 18 kHz switching regulator which generates +5V, ±4 Vdc from the instruments' unregulated +28 Vdc input. It consists of switch Q1, voltage regulator U1, current limit circuit Q2 and input and output filter circuits.

The +28 Vdc input voltage is filtered by C1, L1, C2 and is applied to U1(8) and Q1. U1(7) output is a +5 Vdc rectangular wave signal which switches Q1 at a 9 to 18 kHz rate depending on load current and input voltage.

A reference voltage output is generated at U1(4) and is applied to U1(3). The filtered +5 Vdc output is monitored at U1(2) and any differences between U1(3) and U1(2) changes the duty-cycle of U1(7) output. The duty-cycle change adjusts Q1 on-off Times. If the +5 Vdc output tends to increase, Q1 on-time decreases which reduces the output voltage. If the +5 Vdc output tends to decrease, Q1 on-time increases which increases the output voltage.

Current limiter Q1 senses the current flow through R8. Excessive current turns Q1 on and is sensed at U1(9). This sets U1 into current-limit mode which reduces the +5 Vdc output to zero. Current limit occurs at about 450 mA. When the cause of excessive current is removed, the +5 Vdc output returns to normal.

Diode CR1 is a commutating diode which conducts L2 coil current during Q1 off-times. R1, CR8 are part of an ac sense circuit which monitors the unregulated, instrument generated dc and switches the clock display off whenever ac power is not available.

A2, 50 Hz Logic Board

The 50 Hz logic board generates the 50 Hz signal which operates the clock display. It also synchronizes the clock display advance with the instrument generated 1 PPS signal. This board also contains the ac sense circuits which turn off the clock display whenever ac power to the instrument is not available.

When power is first applied, the RC time constant of R3, C1 causes one shot M.V. U3B(13) to generate a pulse output. The pulse period is determined by the RC time constant of (R7-C3). U3B(13) output resets U3A which sets U3A(1) low and disables gate U1B. With this gate disabled, no clock pulses are gated thru U1B to U2(1).

U3B(13) one-shot output is also gated thru U5B, clocks U6B and turns on the 65 Hz free running M.V. comprised of U1D, U5D and its associated components. The 65 Hz output from U5D is gated thru U5A to the A3 clock display board U1(19). U1, on A3 clock display board, accumulates the 65 Hz pulses and generates a pulse output at 50th pulse (1 second). This pulse is used to synchronize the clock display with the instruments' 1 PPS. The 1-second clocks U3A on A2, 50 Hz logic board. U3A(1) output goes high, enables U1B and allows the 65 Hz pulses to clock U2. U2 counts to 49 which is sensed by U4C. U4C output is inverted by U4A, gated thru U4B and inverted again to a high level thru U5C. This level resets U6B and turns off free-running M.V. U1D U5D.

Accumulator U1 on A3 clock display board, has counted to 49. The instrument 1 PPS input to the 50 Hz logic board is "stretched" and level-changed thru Q2 and clocks U6A. U6A is a one-shot M.V. whose 75 usec period is determined by R6, C2 RC time-constant. U6A(1) output is gated thru U5A to A3 clock display board U1, as the 50th cycle. The clock display then advances one second. The U6A output pulse is delayed by R8-C4, gated thru U5B(5) and clocks U6B which starts free-running M.V. U1D, U5D.

The delay circuit R8, C4 provides a time delay between the 1 PPS generated 50th cycle, which causes the display to increment 1 second, and the start of the next free running M.V. cycle, which enables U1 on A3 clock display board to count to 49.

A3, Clock Display Board

The clock display board consists of a MOS clock chip, a transistor array, a buffer amplifier array, four driver transistors and six LED displays. This assembly's function is to accumulate and display time-of-day in synchronism with the instruments' 1 PPS signal.

The MOS clock circuit U1 operates from the 50 Hz input from A2 50 Hz logic board. U1 divides the 50 Hz signal by 50 and generates a 1 PPS output at pin 20 which is used to synchronize the display to the instrument 1 PPS signal.

Counter stages with U1 divide the input 50 Hz signal and generate the hours, minutes, and seconds outputs for the LED displays.

The time display signals from U1 are comprised of two parts:

1. The digit enable signal.
2. The multiplexed 7-segment signal.

The digits enable signals from U1 are:

Pin 23: tens-of-hours.
Pin 24: units-of-hours.
Pin 25: tens-of-minutes.
Pin 26: units-of-minutes.
Pin 21: tens-of-seconds.
Pin 22: units-of-seconds.

These signals enable the LED displays through U3 gates, and allow the multiplexed 7 segments outputs to turn-on the correct display segment.

The multiplexed 7 segment signals from U1 are (see Figure __ for "segments"):

Pin 6: for segment a.
Pin 7: for segment b.
Pin 8: for segment c.
Pin 9: for segment d.
Pin 10: for segment e.
Pin 11: for segment f.
Pin 12: for segment g.

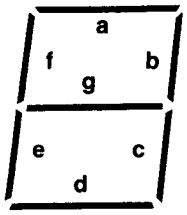

These "segment enabling signals" are buffered through U2 stages and applied to the LED displays. Thus, the segments of an individual number display are enabled by outputs from U1(6 to 12) while the number itself is turned on by one of the U1 (21 to 26) outputs.

MAINTENANCE

General

The A19 LED Digital Clock Assembly has no adjustments and requires no periodic maintenance. Should repair be necessary, the unit may be removed and operated on the bench while remaining connected to the instrument. When operating in this manner, however, the clock chassis or circuit common **must be connected to the instrument chassis** with a CLIP LEAD OR JUMPER WIRE. The following paragraphs describe assembly removal, fault finding procedures for the clock system, and troubleshooting information for the individual circuits.

NOTE

Most of the circuits on the 50 Hz LOGIC and CLOCK DISPLAY assemblies are CMOS. Use high impedance tet equipment when checking signals. Precautions should be taken when removing or replacing these circuits to prevent damage from static charges.

Repairs

Before repairs are attempted:

a. Momentarily set front panel DIVIDER MODE switch to START.
b. Check CIRCUIT CHECK meter in 1 MHz position for reading of approximately 40. If not, troubleshoot A6 assembly.
c. Check front panel 1 PPS output. If not present, troubleshoot A5 assembly.
d. If the display is not lit, press STANDBY DISPLAY switch. If display lights and operates normally, the instrument is not operating from AC power. This condition is normal. If the display does not light when the STANDBY DISPLAY switch is pressed, perform troubleshooting procedures.
e. Read LED Digital Clock Theory of Operation.

A19 Assembly Removal

Prior to removing or reinstalling the LED Digital Clock, all operating power must be removed. Wire and cable

length to the clock panel or clock rear board is sufficient to enable removal of the clock without disconnecting these wires or the cable. The clock should be placed on a pad or cloth to minimize scratch damage or shorting of circuit traces.

To remove the clock:

a. Remove all operating power.

b. Remove the instrument top cover. In Option 003 disable the internal standby battery.

c. Use a 5/16" wrench and remove two 5/16" nuts which secure the clock to the instrument front panel. Retain the nuts for reinstallation. The bottom of the clock is retained in place by a third nut which must also be removed.

d. Press firmly at the bottom-rear then at the top-rear of the clock until it is loose.

e. Gradually remove the clock. Gently pull the connected wires and cable forward and set the clock on the work surface.

f. Before applying operating power ensure that the exposed LED Clock boards and wires are not in contact with any metal objects or surfaces. Reapply operating power.

g. To reinstall the LED clock, remove all operating power. In Option 003, disable the internal standby battery.

h. Do steps b to e in reverse order. (See Note.)

NOTE

While installing the clock into the instrument front panel, check that wires are not pinched by screws or metal work. Position the wires for a neat appearance after installation.

i. When clock is reinstalled, reapply power and set time as described in replacement paragraph for page 3-12, paragraph 3-38 of your 5065A Operating and Service Manual.

TROUBLESHOOTING

General

Each of the circuit boards in this assembly perform a specific function, requiring only 1 of 2 inputs to generate its output. These can easily be checked without disassembling the clock.

Procedures in this section describe fault isolation to the circuit board level, disassembly of the clock, and troubleshooting information for each of the three circuits.

Clock System Troubleshooting

To perform the following tests the clock must be removed from the instrument and connected as described in A19 ASSEMBLY REMOVAL of this change sheet.

A1 Power Supply Check

NOTE

All voltages measured with respect to instrument chassis.

a. Measure voltages indicated below. Be sure clock chassis is grounded to instrument chassis.

VOLTAGE	LOCATION
+26 ±4V dc	**A16A1(3)**
+12 ±2V dc	**A16A1(R)**
+5 ±.2V dc	**A16A1(4)**

b. If the +26 or +12 volt supplies are out of tolerance, troubleshoot the source of these voltages. If the +5V supply is out of tolerance, remove the connection between A1(4) and A2(4) and measure the voltage again. If voltage now is correct, go to step b(2).

(1) If voltage remains out of tolerance, troubleshoot A1, 5V regulator assembly. See clock repair and disassembly, step 1 and "Circuit Board Troubleshooting", step 1.

(2) If voltage is now correct it indicates a short or low impedance on 5V line or defective current-limit circuit: troubleshoot 5V line and circuits on A3 which use 5V. If these are OK, check current-limit circuit of A1Q2.

NOTE

An external 5 V can be used in place of A1 output.

c. Check for +1V, 150 nsec, 1 PPS signal at A1(W). Be sure clock chassis is grounded to instrument chassis. If pulse not present, troubleshoot A16 Assembly.

A3 Clock Display Check

a. If display is not lit go to "Display not lit" step 2. If display is lit but not functioning correctly continue:
1. Check waveform at A3(2). It should be as shown on schematic.

2. If correct, go to item 5 of this paragraph. If incorrect or not present, cut 1 PPS wire between A3(1) and A2.
3. Press and release HOLD pushbutton. Momentarily connect a clip lead from the +12V supply (A1(R)) to where 1 PPS wire (cut in previous step) connects to A2 assembly.
4. Recheck waveform at A3(2). If correct, replace A3U1. If incorrect troubleshoot A2. See "Clock Repair and Disassembly" step 3 and "Circuit Board Troubleshooting", step 3.
5. Connect a counter, set to totalize (manual gate open) to A3(2).
6. Unplug the white wire (which connects the clock assembly to the instrument chassis) at the instrument chassis.
7. Reset counter to zero and momentarily reconnect white wire removed in step 6. Disconnect white wire as soon as the counter starts counting.
8. Counter should read 51 pulses or multiplies of 51 (depending on how quickly the white wire was disconnected). If the counter reads incorrectly troubleshoot A2. See "Clock Repair and Disassembly", step 3 and "Circuit Board Troubleshooting", step 3.
9. Check A3(1) for a 1 PPS square wave. If not present, check for +12V at A3(11). If +12V is present, replace A3U1. If 1 PPS is present, troubleshoot A3, See "Clock Repair and Disassembly", step 2 and "Circuit Board Troubleshooting", step 2.

b. Display Not Lit

1. Check voltage at A3(5). It should be a few tenths-of-a-volt less than the voltage at A1(4). If incorrect, troubleshoot "AC SENSE" CIRCUIT ON A2. See "Clock Repair and Disassembly" step 3 and "Circuit Board Troubleshooting", step 3.
2. Check +12V input at A3(11). It should be the same as measured at A1(R). If not, check continuity of +12V line from A1 to A3.
3. Substitute a new LED in one of the display positions.
4. Trouble is in U1, 2 or 3. Check for switching waveforms at U1(6-12) and (21-26). Check for switching waveforms at U2 and U3 outputs. See schematic for typical waveforms.

A2 50 Hz Logic Check

Troubleshooting checks to this point have isolated most problems to the failed circuit board. Problems of a more subtle nature such as clock not keeping correct time, or display not synchronized to the instrument's 1 PPS output signal, are the type of problems associated with the 50 Hz logic board.

Clock Repair and Disassembly

1. To troubleshoot A1 5V regulator board it is not necessary to disassemble the clock. The board may be removed when making repairs, if soldering is required on the backside of the board.
2. To troubleshoot A3 display assembly remove three nuts which secure the circuit boards to the front panel assembly. Remove STANDBY DISPLAY switch from front panel. Remove Clock Circuit Board Assembly from front panel assembly. Remove six spacers from between boards. Reconnect all wires. Be sure to connect clock circuit ground (pads under spacers) to instrument chassis.
3. To troubleshoot A2 50 Hz LOGIC do step 2 above, but do not connect wires. Unsolder A3 from A2. Connect only the black and red wires (from A1 to instrument). Also connect clock circuit ground (pads under spacers) to instrument chassis.

CIRCUIT BOARD TROUBLESHOOTING

A1 Power Supply

Since this circuit contains only four active components, it is relatively easy to troubleshoot. With power disconnected check Q1, Q2, CR1 and capacitors. If these are good, trouble is probably in A1U1.

A3 Clock Display

U1 accumulates time, and drives the LED displays thru U2, U3 and transistors Q1-6. To troubleshoot, observe that switching signal originating at U1(6-12) is reaching U3 outputs, and signal at U1(21-26) is reaching collectors of Q1-6. LEDs can be checked by substitution. If all signals are correct trouble is in U1.

A2 50 Hz Logic

a. Momentarily press HOLD button.
b. Momentarily connect a jumper from +12V supply to U3(3). This resets the counters and enables

input one-shot U6A. Circuit cannot operate until this is done.

NOTE

When viewing A2 waveforms it is helpful to synchronize oscilloscope from front panel 1 PPS output.

c. If clock time is incorrect or out of sync:

1. Check 65 Hz oscillator (U6B, U1D, U5D), 49-counter (U2), 49-sense, (U4C, U4A) and amplifier circuits (U2, 4, 5).

2. Check operation of U3A and U3B (press HOLD trigger U3A and reset U3B. Connect +12V to U3(3) to operate U3A.

d. If there is no output from A3, check 1 PPS signal path thru U5A.

NOTE

U6A is enabled by a high level (12V) at U6(5). If this level is incorrect repeat steps a and b. If level does not change, trouble is in 49-count or sense circuits (U2, U4C, U4A).

Table 1. A19 SERIES 1532 Digital Clock Replaceable Parts

Reference Designation	HP Part Number	Qty	Description	Mfr Code	Mfr Part Number
A19	05061-6120	1	CLOCK ASSEMBLY, LED FOR OPT 001	28480	05061-6120
A1	05061-6117	1	BOARD ASSEMBLY, REGULATOR	28480	05061-6117
A2	05061-6116	1	BOARD ASSEMBLY, 50 HZ LOGIC	28480	05061-6116
A3	05061-6115	1	BOARD ASSEMBLY, DISPLAY	28480	05061-6115
J13	1250-0102	1	CONNECTOR-RF BNC FEM SGL HOLE FR	28480	1250-0102
S1	3101-0052	1	SWITCH-PB SPST NO MOM .25A 30VAC	82389	961
S2	3101-0557	3	SWITCH-PB SPST NO MOM .5A 120VAC	09353	8631-E
S3	3101-0557		SWITCH-PB SPST NO MOM .5A 120VAC	09353	8631-E
S4	3101-0557		SWITCH-PB SPST NO MOM .5A 120VAC	09353	8631-E
			MISCELLANEOUS		
	1200-0063	3	CONNECTOR-SGL CONT SKT (FOR GOLD-POST CONNECTORS)	28480	1200-0063
	5020-0176	3	INSULATOR FOR SNAP-ON PINS (FOR GOLD-POST CONNECTORS)	28480	5020-0176
	05061-0078	1	BRACKET, SWITCH	28480	05061-0078
	05061-2118	1	PANEL, CENTER	28480	05061-2118
	05061-2120	1	PLATE, CENTER	28480	05061-2120
	05062-20162	1	WINDOW, DISPLAY	28480	05062-20162
A19	05061-6119	1	CLOCK ASSEMBLY, LED FOR OPT 003	28480	05061-6119
A1	05061-6117		BOARD ASSEMBLY, REGULATOR	28480	05061-6117
A2	05061-6116		BOARD ASSEMBLY, 50 HZ, LOGIC	28480	05061-6116
A3	05061-6115		BOARD ASSEMBLY, DISPLAY	28480	05061-6115
DS3	2140-0025	1	LAMP-INCAND T-1-3/4 BULB 28V	28480	2140-0025
	1450-0114	1	LIGHT-IND LAMPHOLDER AMB TP LENS	07137	RDL-B3-F3-000
J13	1250-0102		CONNECTOR-RF BNC FEM SGL HOLE FR	28480	1250-0102
S1	3101-0052		SWITCH-PB SPST NO MOM .25A 30VAC	82389	961
S2	3101-0557		SWITCH-PB SPST NO MOM .5A 120VAC	09353	8631-E
S3	3101-0557		SWITCH-PB SPST NO MOM .5A 120VAC	09353	8631-E
S4	3101-0557		SWITCH-PB SPST NO MOM .5A 120VAC	09353	8631-E
			MISCELLANEOUS		
	1200-0063		CONNECTOR-SGL CONT SKT (FOR GOLD-POST CONNECTORS)	28480	1200-0063
	5020-0176		INSULATOR FOR SNAP-ON PINS (FOR GOLD-POST CONNECTORS)	28480	5020-0176
	05061-0078		BRACKET, SWITCH	28480	05061-0078
	05061-2119	1	PANEL, CENTER	28480	05061-2119
	05061-2120		PLATE, CENTER	28480	05061-2120
	05062-20162		WINDOW, DISPLAY	28480	05062-20162
A1	05061-6117		BOARD ASSEMBLY, +5V REGULATOR	28480	05061-6117
A1C1	0160-3879	3	CAPACITOR-FXD .01UF +-20% 100WVDC CER	28480	0160-3879
A1C2	0180-0141	2	CAPACITOR-FXD; 50UF+75-10% 50VDC AL	56289	30D506G050DD2
A1C3	0180-1743	2	CAPACITOR-FXD; .1UF+-10% 35VDC TA-SOLID	56289	150D104X9035A2
A1C4	0180-1743		CAPACITOR-FXD; .1UF+-10% 35VDC TA-SOLID	56289	150D104X9035A2
A1C5	0180-0098	1	CAPACITOR-FXD; 100UF+-20% 20VDC TA	56289	150D107X0020S2
A1C6	0160-2204	1	CAPACITOR-FXD 100PF +-5% 300WVDC MICA	28480	0160-2204
A1C7	0160-3879		CAPACITOR-FXD .01UF +-20% 100WVDC CER	28480	0160-3879
A1C8	0180-0141		CAPACITOR-FXD; 50UF+75-10% 50VDC AL	56289	30D506G050DD2
A1CR1	1901-0693	1	DIODE-PWR RECT 1N4934 100V 1A 200NS	04713	1N4934
A1L1	9140-0237	1	COIL-FXD MOLDED RF CHOKE 200UH 5%	24226	15/203
A1L2	9100-0536	1	COIL-FXD NON-MOLDED RF CHOKE 1.5MH 8%	28480	9100-0536
A1Q1	1853-0012	1	TRANSISTOR PNP 2N2904A SI TO-5 PD=600MW	01295	2N2904A
A1Q2	1854-0215	3	TRANSISTOR NPN SI PD=350MW FT=300MHZ	04713	SPS 3611
A1R1	0757-0928	2	RESISTOR 1.5K 2% .125W F TC=0+-100	24546	C4-1/8-TO-1501-G
A1R2	0757-0935	1	RESISTOR 3K 2% .125W F TC=0+-100	24546	C4-1/8-TO-3001-G
A1R3	0683-3605	1	RESISTOR 36 5% .25W FC TC=+400/+500	01121	CB3605
A1R4	0683-1055	2	RESISTOR 1M 5% .25W FC TC=+800/+900	01121	CB1055
A1R5	0757-0928		RESISTOR 1.5K 2% .125W F TC=0+-100	24546	C4-1/8-TO-1501-G
A1R6	0757-0937	1	RESISTOR 3.6K 2% .125W F TC=0+-100	24546	C4-1/8-TO-3601-G
A1R7	0757-0924	4	RESISTOR 1K 2% .125W F TC=0+-100	24546	C4-1/8-TO-1001-G
A1R8	0698-8177	1	RESISTOR 1.5 5% .25W F TC=0+-100	11502	TF07-1/4-T0-1R5-J
A1R9	0757-0924		RESISTOR 1K 2% .125W F TC=0+-100	24546	C4-1/8-T0-1001-G
A1U1	1820-0196	1	IC RGLTR	07263	723HC

See introduction to this section for ordering information

Table 1. A19 SERIES 1532 Digital Clock Replaceable Parts (Continued)

Reference Designation	HP Part Number	Qty	Description	Mfr Code	Mfr Part Number
A2	05061-6116		BOARD ASSEMBLY, 50 HZ, LOGIC	28480	05061-6116
A2C1	0160-3878	4	CAPACITOR-FXD 1000PF +-20% 100WVDC CER	28480	0160-3878
A2C2	0160-3873		CAPACITOR-FXD 1000PF +-20% 100WVDC CER	28480	0160-3873
A2C3	0160-3878		CAPACITOR-FXD 1000PF +-20% 100WVDC CER	28480	0160-3878
A2C4	0160-3873		CAPACITOR-FXD 1000PF +-20% 100WVDC CER	28480	0160-3873
A2C5	0160-0207	1	CAPACITOR-FXD .01UF + 5% 200WVDC POLYE	56289	292P10392
A2CR1	1902-3234	1	DIODE-ZNR 19.6V 5% DO-7 PD=.4W TC=+.073%	04713	SZ 10939-266
A2Q1	1854-0215		TRANSISTOR NPN SI PD=350MW FT=300MHZ	04713	SPS 3611
A2Q2	1854-0215		TRANSISTOR NPN SI PD=350MW FT=300MHZ	04713	SPS 3611
A2Q3	1853-0036	7	TRANSISTOR PNP SIL PD=310MW FT=250MHZ	04713	SPS-3612
A2R1	0757-0924		RESISTOR 1K 2% .125W F TC=0+-100	24546	C4-1/8-TO-1001-G
A2R2	0757-0948	2	RESISTOR 10K 2% .125W F TC=0+-100	24546	C4-1/8-TO-1002-G
A2R3	0683-1055		RESISTOR 1M 5% .25W FC TC=-800/+900	01121	CB1055
A2R4	0757-0955	2	RESISTOR 20K 2% .125W F TC=0+-100	24546	C4-1/8-TO-2002-G
A2R5	0757-0950	1	RESISTOR 12K 2% .125W F TC=0+-100	24546	C4-1/8-TO-1202-G
A2R6	0757-0969	1	RESISTOR 75K 2% .125W F TC=0+-100	24546	C4-1/8-TO-7502-G
A2R7	0757-0945	1	RESISTOR 7.5K 2% .125W F TC=0+-100	24546	C4-1/8-TO-7501-G
A2R8	0757-0955		RESISTOR 20K 2% .125W F TC=0+-100	24546	C4-1/8-TO-2002-G
A2R9	0683-1555	1	RESISTOR 1.5M 5% .25W FC TC=-900/+1100	01121	CB1555
A2R10	0757-0485	1	RESISTOR 681K 1% .125W F TC=0+-100	24546	NA4
A2R11	0757-0963	1	RESISTOR 43K 2% .125W F TC=0+-100	24546	C4-1/8-TO-4302-G
A2R12	0757-0948		RESISTOR 10K 2% .125W F TC=0+-100	24546	C4-1/8-TO-1002-G
A2R13	0757-0924		RESISTOR 1K 2% .125W F TC=0+-100	24546	C4-1/8-TO-1001-G
A2R14	0757-0905	1	RESISTOR 160 2% .125W F TC=0+-100	24546	C4-1/8-TO-161-G
A2U1	1820-0949	1	IC CD4011AE GATE	02735	CD4011AE
A2U2	1820-0936	1	IC CD4024AE COUNTER	02735	CD4024AE
A2U3	1820-0939	2	IC CD4013AE FLIP-FLOP	02735	CD4013AE
A2U4	1820-0943	1	IC CD4023AE GATE	02735	CD4023AE
A2U5	1820-0946	1	IC CD4001AE GATE	02735	CD4001AE
A2U6	1820-0939		IC CD4013AE FLIP-FLOP	02735	CD4013AE
A3	05061-61152		BOARD ASSEMBLY, DISPLAY	28480	05061-61152
A3C1	0160-3879		CAPACITOR-FXD .01UF +-20% 100WVDC CER	28480	0160-3879
A3DS1	1990-0452	6	DISPLAY NUM SEG 1 CHAR .3 IN HIGH	28480	1990-0452
A3DS2	1990-0452		DISPLAY NUM SEG 1 CHAR .3 IN HIGH	28480	1990-0452
A3DS3	1990-0452		DISPLAY NUM SEG 1 CHAR .3 IN HIGH	28480	1990-0452
A3DS4	1990-0452		DISPLAY NUM SEG 1 CHAR .3 IN HIGH	28480	1990-0452
A3DS5	1990-0452		DISPLAY NUM SEG 1 CHAR .3 IN HIGH	28480	1990-0452
A3DS6	1990-0452		DISPLAY NUM SEG 1 CHAR .3 IN HIGH	28480	1990-0452
A3Q1	1853-0036		TRANSISTOR PNP SIL PD=310MW FT=250MHZ	04713	SPS-3612
A3Q2	1853-0036		TRANSISTOR PNP SIL PD=310MW FT=250MHZ	04713	SPS-3612
A3Q3	1853-0036		TRANSISTOR PNP SIL PD=310MW FT=250MHZ	04713	SPS-3612
A3Q4	1853-0036		TRANSISTOR PNP SIL PD=310MW FT=250MHZ	04713	SPS-3612
A3Q5	1853-0036		TRANSISTOR PNP SIL PD=310MW FT=250MHZ	04713	SPS-3612
A3Q6	1853-0036		TRANSISTOR PNP SIL PD=310MW FT=250MHZ	04713	SPS-3612
A3R1	0698-7964	1	RESISTOR 100K 1% .125W CC TC=0+-250	01121	BB1043
A3R2	0698-5180	7	RESISTOR 2K 5% .125W CC TC=0+882	01121	BB2025
A3R3	0698-5180		RESISTOR 2K 5% .125W CC TC=0+882	01121	BB2025
A3R4	0698-5180		RESISTOR 2K 5% .125W CC TC=0+882	01121	BB2025
A3R5	0698-5180		RESISTOR 2K 5% .125W CC TC=0+882	01121	BB2025
A3R6	0698-5180		RESISTOR 2K 5% .125W CC TC=0+882	01121	BB2025
A3R7	0698-5180		RESISTOR 2K 5% .125W CC TC=0+882	01121	BB2025
A3R8	0698-5180		RESISTOR 2K 5% .125W CC TC=0+882	01121	BB2025
A3R9	0698-4130	7	RESISTOR 39 5% .125W CC TC=0+588	01121	BB3905
A3R10	0698-4130		RESISTOR 39 5% .125W CC TC=0+588	01121	BB3905
A3R11	0698-4130		RESISTOR 39 5% .125W CC TC=0+588	01121	BB3905
A3R12	0698-4130		RESISTOR 39 5% .125W CC TC=0+588	01121	BB3905
A3R13	0698-4130		RESISTOR 39 5% .125W CC TC=0+588	01121	BB3905
A3R14	0698-4130		RESISTOR 39 5% .125W CC TC=0+588	01121	BB3905
A3R15	0698-4130		RESISTOR 39 5% .125W CC TC=0+588	01121	BB3905
A3RP1	1810-0055	1	NETWORK-RES 9-PIN-SIP .15-PIN SPCG	28480	1810-0055
A3RP2	1810-0151	1	NETWORK-RES 7-PIN-SIP .15-PIN-SPCG	28480	1810-0151
A3U1	1820-1364	1	IC MM5313N DIGITAL	27014	MM5313N
A3U2	1858-0023	1	IC CA3081 XSTR ARRAY	02735	CA3081
A3U3	1820-1146	1	IC CD4050AE BUFFER	02735	CD4050AE
A3XDS1	1200-0496	6	SOCKET, IC 16-PIN	01295	OBD
A3XDS2	1200-0496		SOCKET, IC 16-PIN	01295	OBD
A3XDS3	1200-0496		SOCKET, IC 16-PIN	01295	OBD
A3XDS4	1200-0496		SOCKET, IC 16-PIN	01295	OBD
A3XDS5	1200-0496		SOCKET, IC 16-PIN	01295	OBD
A3XDS6	1200-0496		SOCKET, IC 16-PIN	01295	OBD

See introduction to this section for ordering information

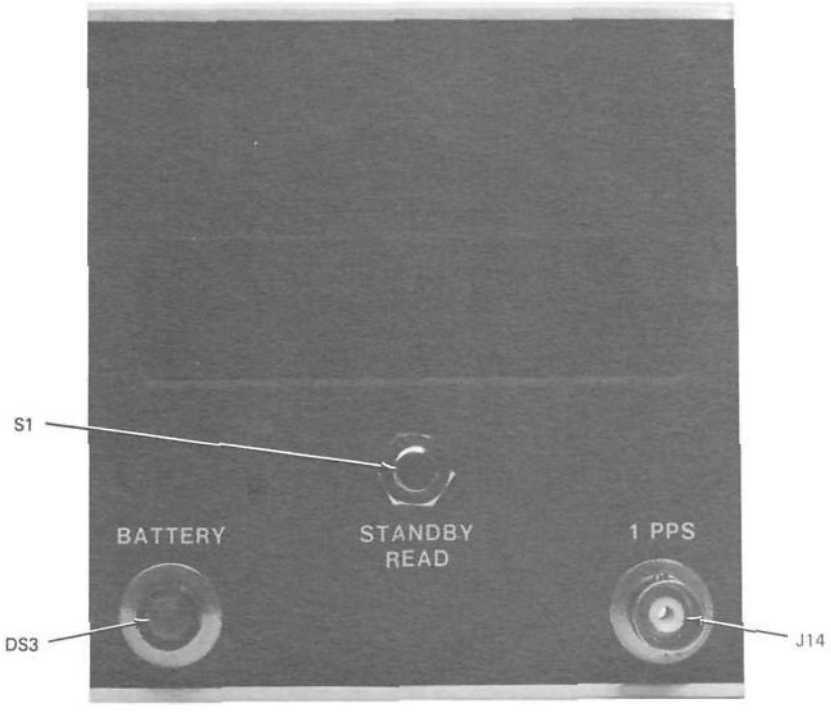

A19 FRONT PANEL (WITH OPTION 003)
(SERIES 1532 OR 1740)

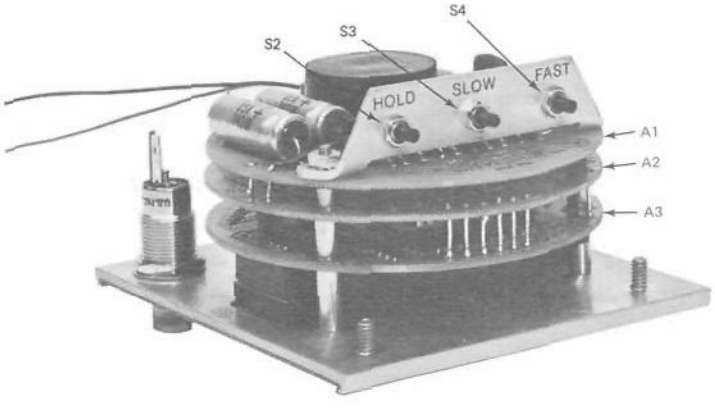

A19 DIGITAL CLOCK

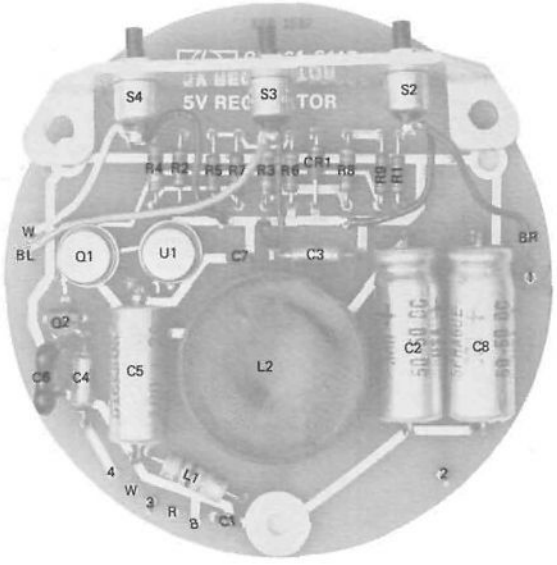

A19A1 5V REGULATOR

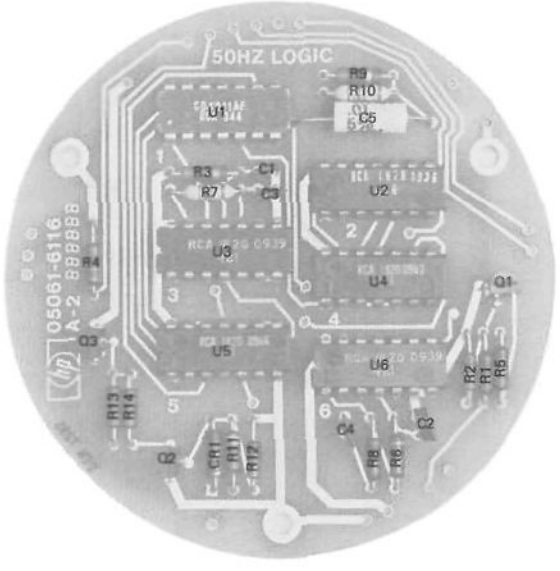

A19A2 50 Hz LOGIC

Figure 7-17
A19 LED DIGITAL CLOCK ASSEMBLY

(See Page 7-51)

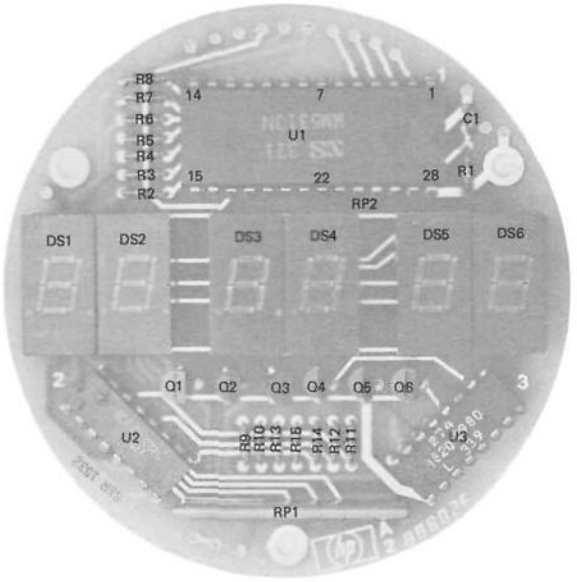

A19A3 CLOCK DISPLAY

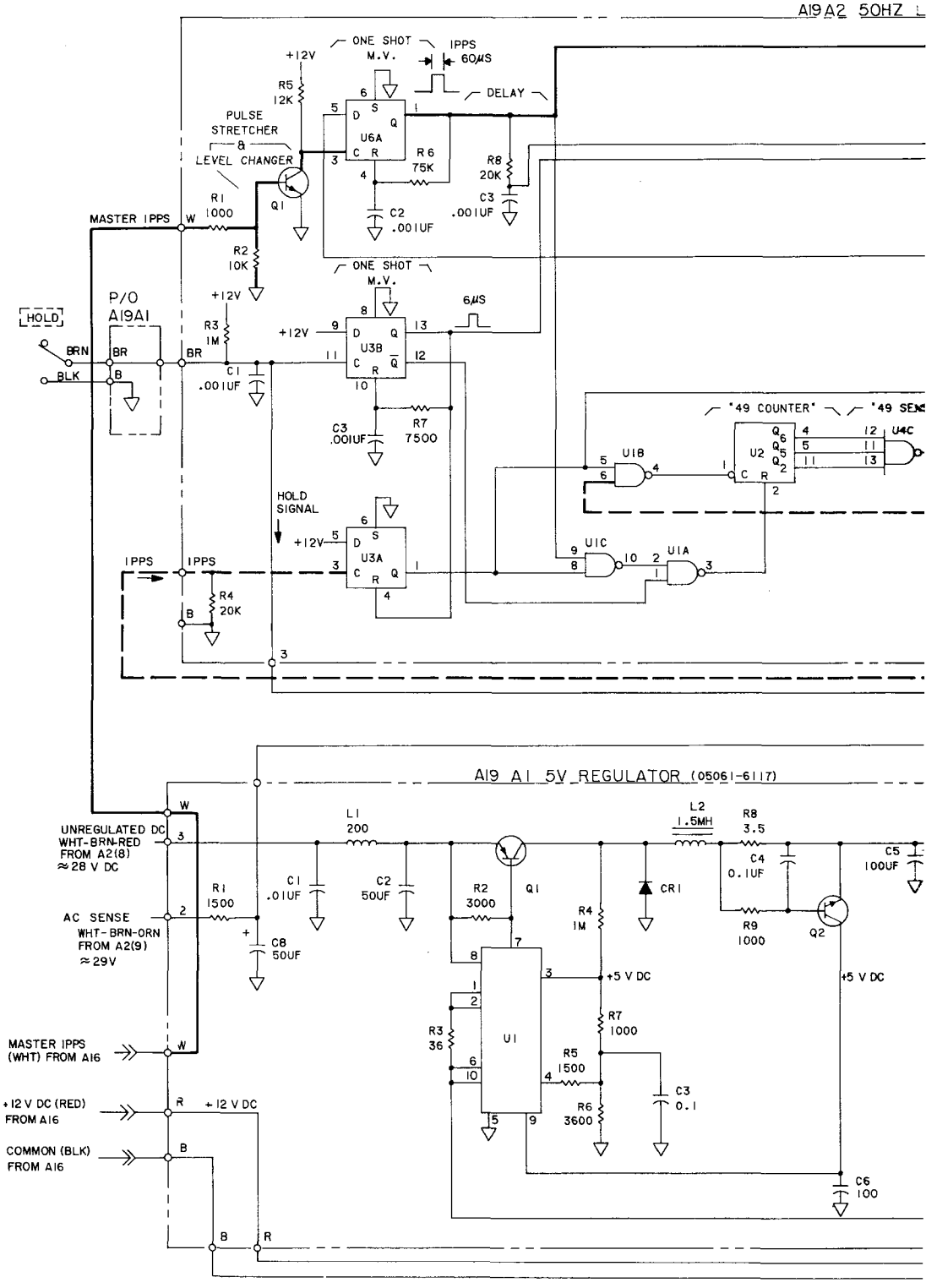
A19A2 50HZ
ONE SHOT M.V.
IPPS 60µS
DELAY
+12V
R5 12K
PULSE STRETCHER & LEVEL CHANGER
U6A
R6 75K
R8 20K
C3 .001UF
C2 .001UF
Q1
R1 1000
MASTER IPPS
W
R2 10K
ONE SHOT M.V.
6µS
P/O A19A1
HOLD
BRN
BLK
BR
B
R3 1M
C1 .001UF
U3B
C3 .001UF
R7 7500
"49 COUNTER"
"49 SEN
U1B
U2
U4C
HOLD SIGNAL
U3A
U1C
U1A
IPPS
R4 20K
A19 A1 5V REGULATOR (05061-6117)
UNREGULATED DC WHT-BRN-RED FROM A2(8) ≈28 V DC
AC SENSE WHT-BRN-ORN FROM A2(9) ≈29V
L1 200
L2 1.5MH
R8 3.5
C4 0.1UF
C5 100UF
R1 1500
C1 .01UF
C2 50UF
R2 3000
Q1
CR1
R4 1M
R9 1000
Q2
C8 50UF
+5 V DC
R7 1000
R3 36
U1
R5 1500
R6 3600
C3 0.1
C6 100
MASTER IPPS (WHT) FROM A16
+12 V DC (RED) FROM A16
+12 V DC
COMMON (BLK) FROM A16

A19A2 50HZ LOGIC (05061-6116)

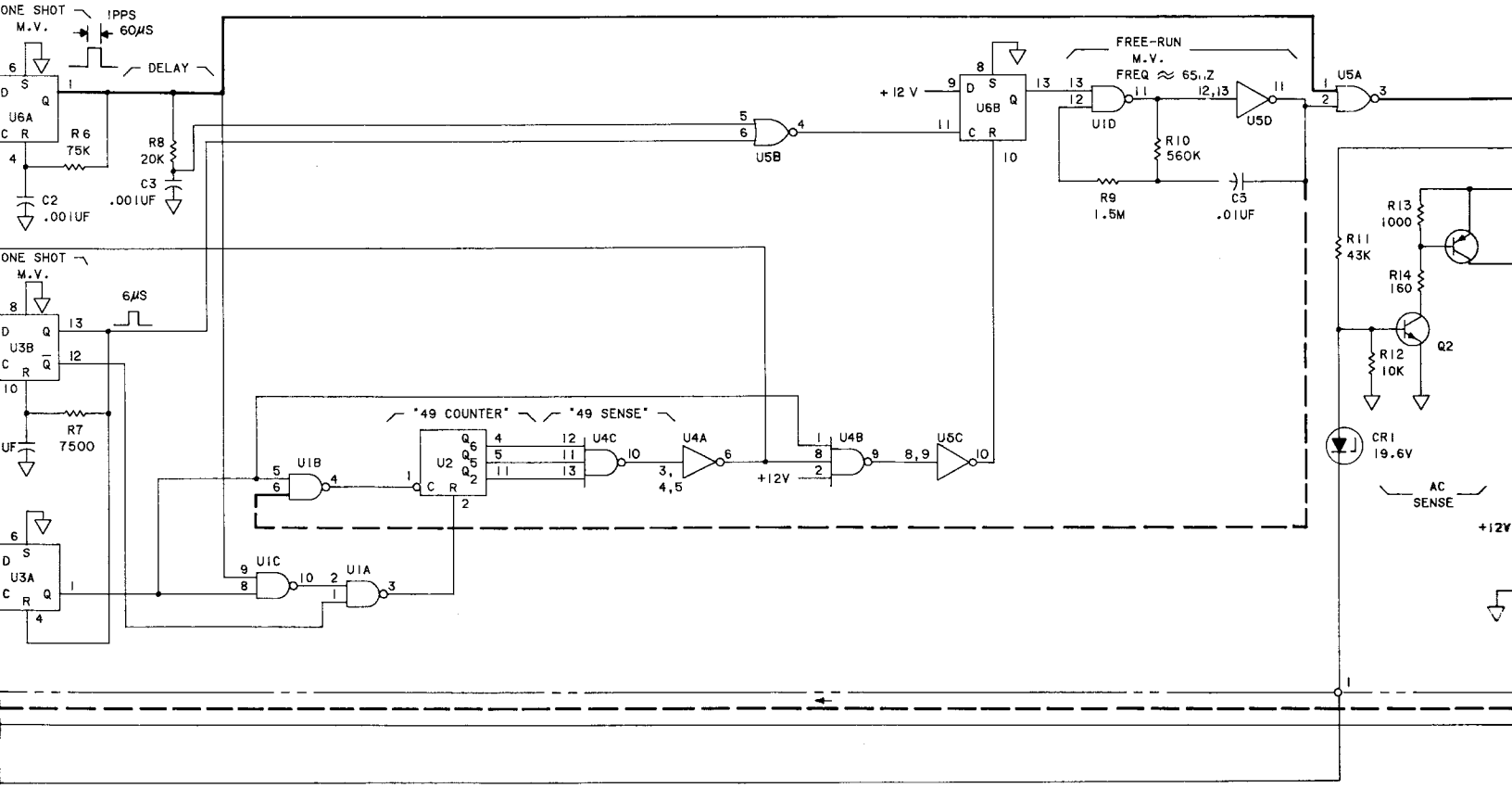

A19 A1 5V REGULATOR (05061-6117)

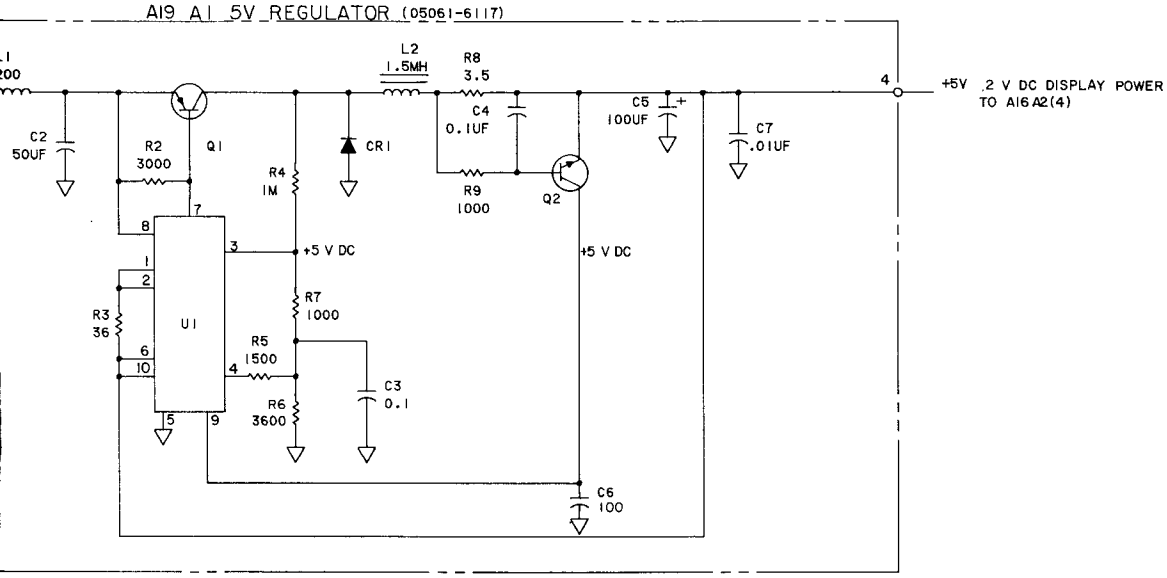

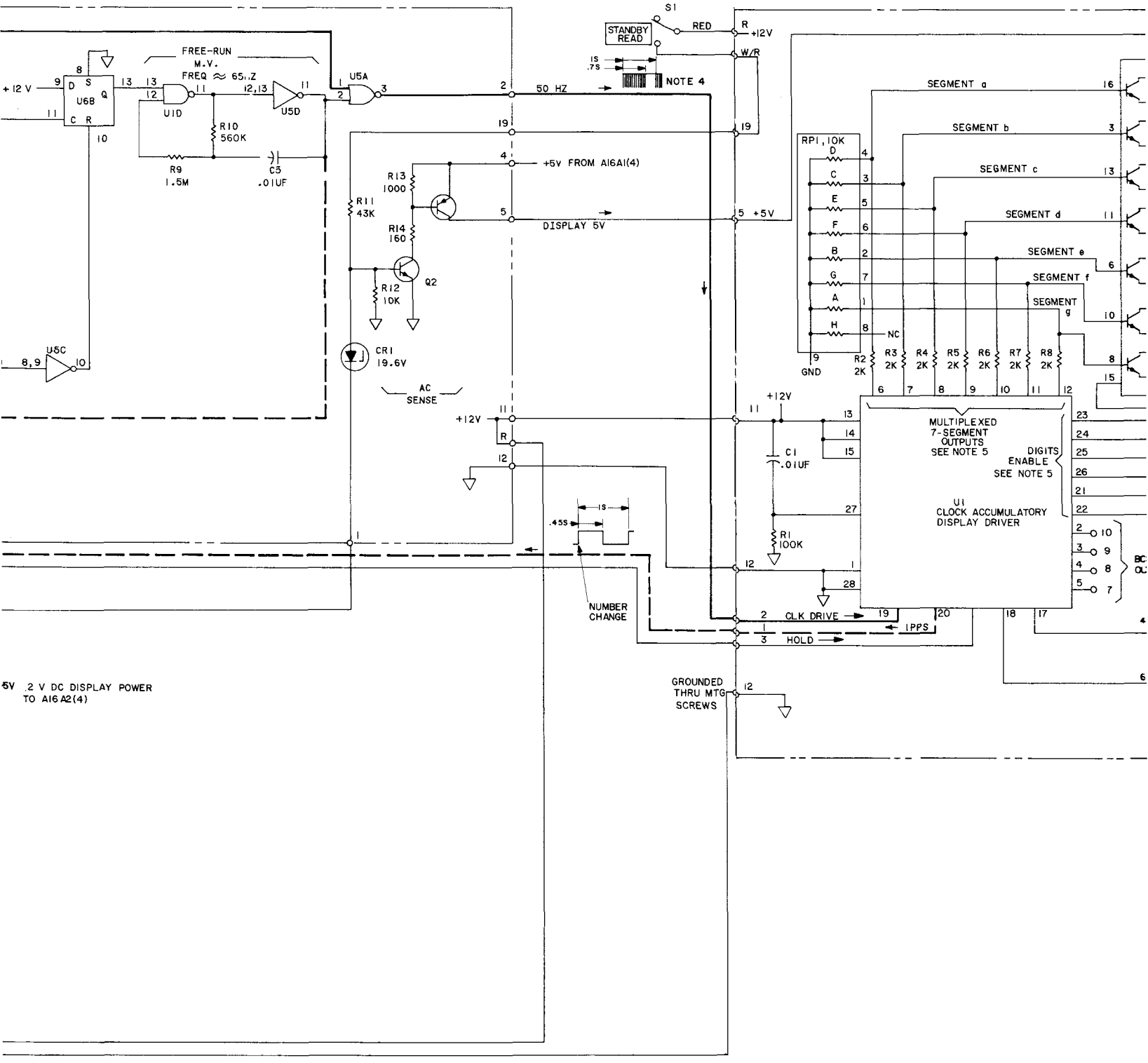
S1
STANDBY READ
RED
R
+12V
W/R
NOTE 4
.1S
.7S
FREE-RUN M.V.
FREQ ≈ 65.2
+12 V
U6B
U1D
U5D
U5A
R10 560K
R9 1.5M
C3 .01UF
50 HZ
+5V FROM A16A1(4)
R13 1000
R11 43K
R14 160
R12 10K
Q2
DISPLAY 5V
+5V
CR1 19.6V
U5C
AC SENSE
+12V
C1 .01UF
R1 100K
.45S
1S
NUMBER CHANGE
CLK DRIVE
1PPS
HOLD
GROUNDED THRU MTG SCREWS
RP1, 10K
D
C
E
F
B
G
A
H
NC
GND
R2 2K
R3 2K
R4 2K
R5 2K
R6 2K
R7 2K
R8 2K
SEGMENT a
SEGMENT b
SEGMENT c
SEGMENT d
SEGMENT e
SEGMENT f
SEGMENT g
MULTIPLEXED 7-SEGMENT OUTPUTS SEE NOTE 5
DIGITS ENABLE SEE NOTE 5
U1
CLOCK ACCUMULATORY DISPLAY DRIVER
5V .2 V DC DISPLAY POWER TO A16A2(4)

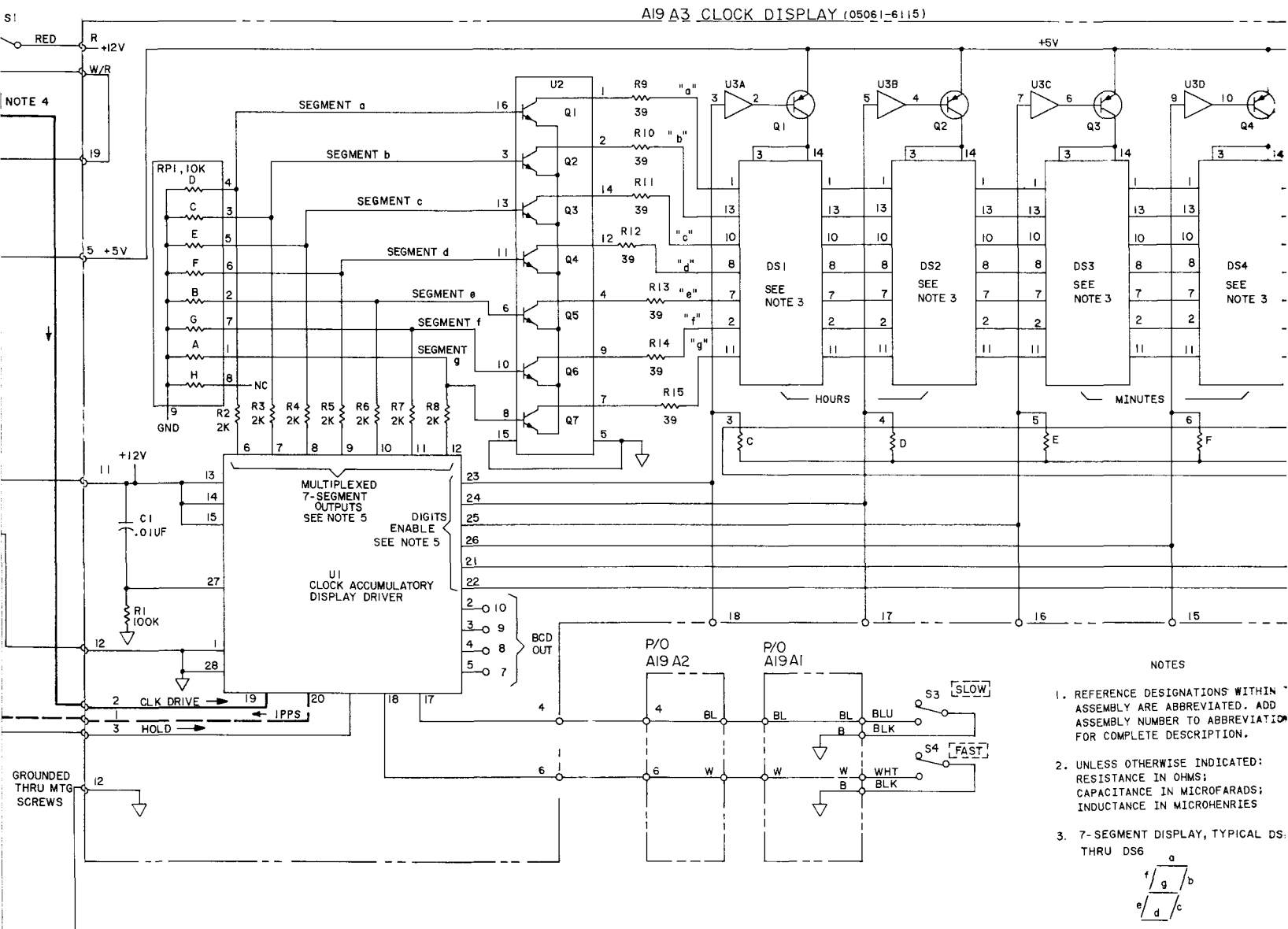

NOTES

1. REFERENCE DESIGNATIONS WITHIN ASSEMBLY ARE ABBREVIATED. ADD ASSEMBLY NUMBER TO ABBREVIATION FOR COMPLETE DESCRIPTION.
2. UNLESS OTHERWISE INDICATED: RESISTANCE IN OHMS; CAPACITANCE IN MICROFARADS; INDUCTANCE IN MICROHENRIES
3. 7-SEGMENT DISPLAY, TYPICAL DS1 THRU DS6

Figure 7-1

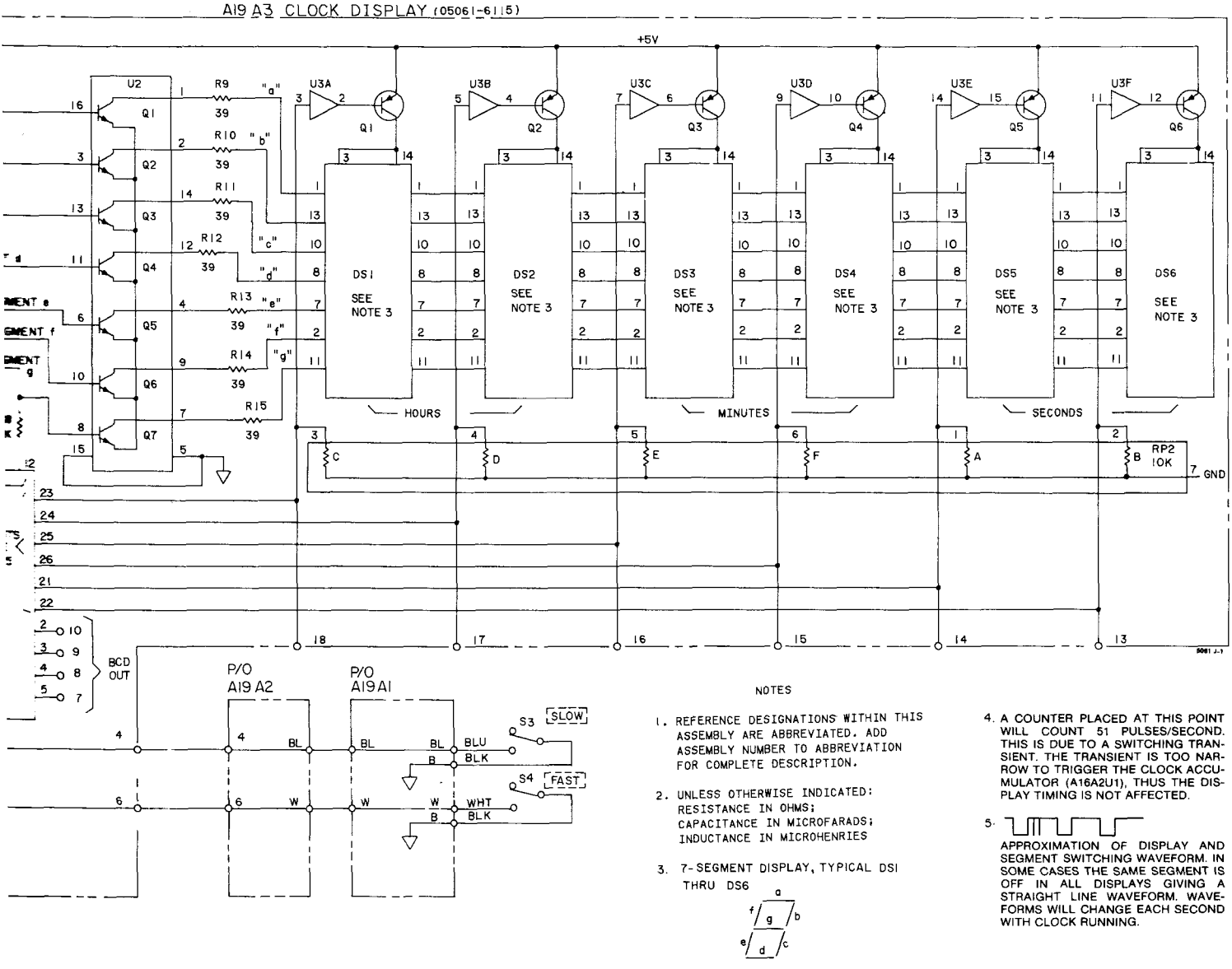

NOTES

1. REFERENCE DESIGNATIONS WITHIN THIS ASSEMBLY ARE ABBREVIATED. ADD ASSEMBLY NUMBER TO ABBREVIATION FOR COMPLETE DESCRIPTION.

2. UNLESS OTHERWISE INDICATED: RESISTANCE IN OHMS; CAPACITANCE IN MICROFARADS; INDUCTANCE IN MICROHENRIES

3. 7-SEGMENT DISPLAY, TYPICAL DS1 THRU DS6

4. A COUNTER PLACED AT THIS POINT WILL COUNT 51 PULSES/SECOND. THIS IS DUE TO A SWITCHING TRANSIENT. THE TRANSIENT IS TOO NARROW TO TRIGGER THE CLOCK ACCUMULATOR (A16A2U1), THUS THE DISPLAY TIMING IS NOT AFFECTED.

5.

APPROXIMATION OF DISPLAY AND SEGMENT SWITCHING WAVEFORM. IN SOME CASES THE SAME SEGMENT IS OFF IN ALL DISPLAYS GIVING A STRAIGHT LINE WAVEFORM. WAVEFORMS WILL CHANGE EACH SECOND WITH CLOCK RUNNING.

Figure 7-17. A19 LED Digital Clock Assembly

CHANGE 20 (1532A00631 and below):

Under Change 19 (this section) A19 Parts List and schematic diagram delete A2C6. Ignore all reference to a third A19 board acting as a shield.

CHANGE 21 (1532A632 through 1532A790):

Page 1-4, Table 1-3:
Change CLOCK MOVEMENT to read "24 hour mechanical clock."

Page 3-9, Paragraph 3-21:
Replace with the following:

"The TIME STANDARD OPTION includes a mechanical clock movement indicating time in hours, minutes, and seconds. FAST and STOP pushbuttons on the divider module (Figure 3-10) permit setting the clock movement to the nearest second. The hour and minute adjustment is the knob located on the back of the clock movement. To set, remove the top cover; then reach in and pull out the knob to engage and set the clock. Push this knob back in to release. The SYNC pushbutton allows the 5065A to be synchronized to an external clock pulse.

Page 3-9, paragraph 3-25(f):
Replace paragraph with:

When the clock pulse is synchronized, the mechanical clock in the 5065A will run in step. The set knob at the rear of the clock provides coarse adjustment of hours and minutes. The FAST and STOP switches on the A5 module provide a way to speed up or stop the clock for adjustment to the nearest second."

Page 3-9, paragraph 3-28:
Replace with: "Setting the Mechanical Clock".

a. Remove top cover for access. Use the set knob at the rear of the clock; pull out to engage and set.

b. The FAST and STOP pushbuttons on A5 are accessible with the top cover removed 10 PPS is routed to the clock with the FAST pushbutton depressed. The STOP pushbutton disconnects the clock drive.

Page 3-15, Figure 3-11:
Add attached TOP OPERATING CONTROLS Figure 7-18.

Page 4-2, paragraph 4-17:
Replace paragraph with the following:

Additional A5 controls are the FAST, STOP, and SYNC switches. The FAST pushbutton speeds up the clock movement by replacing the 1 PPS clock drive with 10 PPS. The STOP pushbutton shorts the 1 PPS clock drive to ground to stop the clock.

To synchronize the 1 PPS with an external reference pulse, the SYNC pushbutton is depressed for 1 second then released. If a sync pulse is connected to the rear SYNC INPUT jack, one reference pulse will enter the synchronizing circuits during the 1 second interval. This pulse will reset the digital divider. The output 1 PPS "tick" pulse from the 1 PPS front panel jack will then be in "sync" with the reference pulse.

Page 6-2, Figure 6-1 item 4:
Change Panel: Left insert; to 05065-0011. Door Panel; to 05065-0015. Standard Panel Insert; to 05065-00122. Panel Option 002 Insert; to 05065-0014.

Page 6-26, Table 6-5:
Added A5B1, 05065-6085.
Change 05065-0048, Chassis: Digital Divider to 05065-0037.
Change A5,05065-6084, Module Assy Digital Divider to 05065-6025. Add A5S1 3101-0052; SWITCH: PUSHBUTTON SPST; 82389; 961 LESS HWD and A5S3 Same as A5S1.

Page 6-27, Table 6-5:
Change A16 from 05065-6085 to 05065-6028.
Change A16A1 from 05065-6082 to 05065-6029.
Add: A16IC1 1820-0313 IC; DTL RS/JK CLOCKED F/F; 28480; 1820-0313
A16A1Q11 and Q12; 1854-0020; TSTR;SI NPN; 28480; 1854-0020.
A16A1CR13 and CR14; 1902-0554; DIODE BREAKDOWN: 10V 1W; 28480; 1902-0554

Page 6-30, Table 6-5:
Add Table 7-11 resistor parts list to A16 (R21 to R26).

Table 7-11. A16 Resistor Parts List

Reference Designation	HP Part Number	Qty	Description	Mfr Code	Part Number
A16A1R21	0757-0931	2	R: FXD FLM 2K OHM 2% 1/8W	28480	0757-0931
A16A1R22	0757-0931		R: FXD FLM 2K OHM 2% 1/8W	28480	0757-0931
A16A1R23	0757-0924	2	R: FXD MET FLM 1K OHM 2% 1/8W	28480	0757-0924
A16A1R24	0757-0924		R: FXD MET FLM 1K OHM 2% 1/8W	28480	0757-0924
A16A1R25	0757-0920		R: FXD FLM 680 OHM 2% 1/8W	28480	0757-0920
A16A1R26	0757-0920		R: FXD FLM 680 OHM 2% 1/8W	28480	0757-0920

Figure 7-18. Top Operating Controls

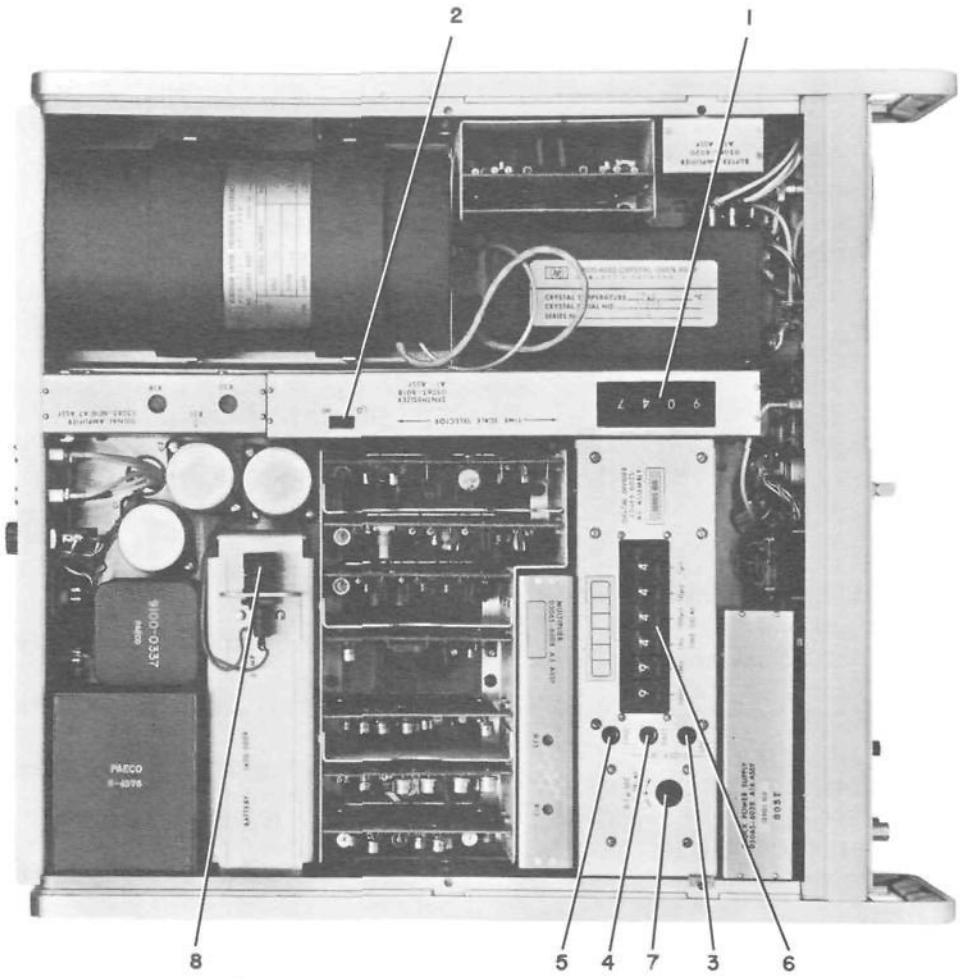

1. Synthesizer TIME CLOCK SELECTOR thumbwheel switch: selects synthesized frequency.

2. Synthesizer TIME SCALE SELECTOR HI-LO switch: used with thumbwheel switch to select synthesized frequency.

3. CLOCK SET STOP switch (Option 001 only). digital clock is stopped when switch is depressed, starts when released.

4. CLOCK SET FAST switch (Option 001 only): digital clock second hand is accelerated when switch is depressed, resumes normal operation when released.

5. Clock SYNC switch (Option 001 only): Synchronizes digital clock with an external clock when depressed; clock remains synchronized when released.

6. Clock TIME DELAY thumbwheel switch (Option 001 only): selects time delay between an external reference pulse and the internal 1 pulse-per-second clock pulse. Adjustable in decade steps from 1 μs to 1 sec.

7. 0-1 μSEC TIME DELAY control (Option 001 only): Allows continuous adjustment of clock pulse delay over any 1 μsec range.

8. Battery fuse: removed momentarily to disconnect optional standby battery from circuit for storage or shipment. Battery will remain disconnected after fuse is replaced.

Page 8-33, Figure 8-133:
Change A5, Digital Divider Assy to 05065-6025
Add A5S1 and S3 switches to schematic as shown in Figure 7-19.

See Figure 8-13 of old manual

Page 8-35, Figure 8-14 and Page 8-37, Figure 8-15:
Change A5 Digital Divider Assy to 05065-6025.

Page 8-73, Figure 8-28:
Change A16, Digital Divider Power Supply Assy to 05065-6028.
Change A16A1 to 05065-6029.
Replace schematic diagram with A16A1 schematic diagram shown in Figure 7-20.

Page 8-69, Figure 8-26:
Add resistor A14R15 between the cathode of A14CR2 and ground (value of 5100 ohms).
Change A14R12 to 1000 ohms and A14R16 to 150k ohms.

Page 6-16, Table 6-2:
Add A14R15; 0757-0941; R:FXD 5.1k OHMS 2% 1/8 W; 28480; 0757-0941.
Change A14R12 to 0757-0924; R:FXD MET 1k OHM 2% 1/8 W; 28480; 0757-924.
Change A14R16 to 0757-0976; R:FXD FLM 150k OHM 2% 1/8W; 28480; 0757-0976.

Page 6-3 and 6-4, Table 6-2, A1 (15065-6076) Replaceable Parts:
Change A1A1R3 to 0698-3617; R:FXD MET FLM 100 OHM 2% 1/8W; 28480; 0698-3617.

Page 8-17 and 8-19, Figure 8-9, A1 Schematic Diagrams:
Change A1A1R3 to 51 OHMS.

CHANGE 22 (1736):

Page 6-18, Table 6-2, Replaceable Parts:
Change fuseholders F1 and F2 part numbers (three pieces each) to 1400-0085 for both fuseholders.

CHANGE 23 (1820):

Page 6-16, Table 6-2, A15 (05065-6023) Replaceable Parts:
Add "(SERIES PREFIX 1820)" to A15 "Description".
Change A15R17 from 2100-1774 to 2100-1773 in "HP" and "Mfr" part number columns. The 2100-1773 control has a value of 1000 ohms.

Page 8-71, Figure 8-27, A15 Schematic Diagram:
Change A15 series number from 1840 (not shown on schematic) to "SERIES 1416".

Change value of A15R17 from 2000 ohms to 1000 ohms.

CHANGE 24 (1840):

Page 6-3 and 6-4, Table 6-2, Replaceable Parts:
Change A1 Module 05065-6076 series number from 1908 to 1736.
Change A1A1Q20 from 1854-0547 to 1854-0035; TRANSISTOR NPN SI; 28480; 1854-0035.
Page 8-17, Figure 8-9, Sheet 1 of 2 Schematic Diagram:
Change A1 and A1A1 series number from 1908 to 1736.
Page 8-19, Figure 8-9, Sheet 2 of 2 Schematic Diagram:
Change A1 and A1A1 series number from 1908 to 1736.
Change A1A1Q20 from 2N3725 to 1854-0035.

CHANGE A (Option 001 A16 Series 1532 only)

NOTE

The following change for A16 series number does not affect the serial prefix number of the instrument in which A16 is installed. Module assembly A16 is added only when Option 001 or 003 is added. Consequently, the series for A16 may not be the same as the instrument serial prefix number.

Page 6-27, Table 6-5, Option 001 to 003 Replaceable Parts:
Change A16 and A16A1 from series 1912 to 1532.
Change A16A1Q8 from 1854-0547 to 1854-0035, TRANSISTOR NPN SI TO-5; 28480; 1854-0035
Page 8-73, Figure 8-28, A16 Schematic Diagram:
Change A16 and A16A1 series number from 1912 to 1532.
Change A16A1Q8 from 2N3725 to 1854-0035.

CHANGE B (Option 001 A5 Series 1840 only)

NOTE

The following changes for A5 series number does not affect the serial prefix number of the instruments with A5 added for Option 001 or 003. The series number of the A5 module assembly may not be the same as the instrument serial prefix number.

Figure 7-19
A5 DIGITAL DIVIDER ASSEMBLY

(See Page 7-55)

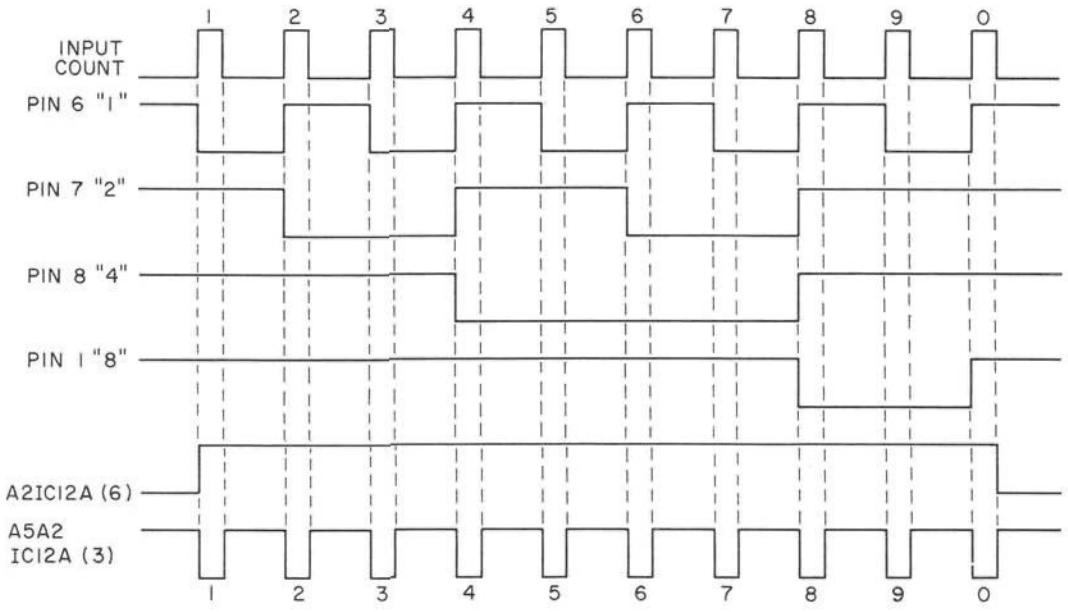
1 2 3 4 5 6 7 8 9 0
INPUT COUNT
PIN 6 "1"
PIN 7 "2"
PIN 8 "4"
PIN 1 "8"
A2IC12A (6)
A5A2 IC12A (3)
1 2 3 4 5 6 7 8 9 0

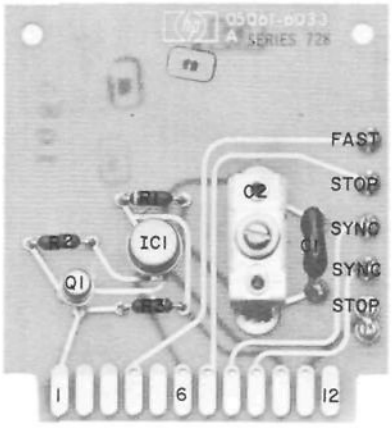
FAST
STOP
SYNC
SYNC
STOP
R1
R2
R3
IC1
Q1
Q2
C1
1
6
12

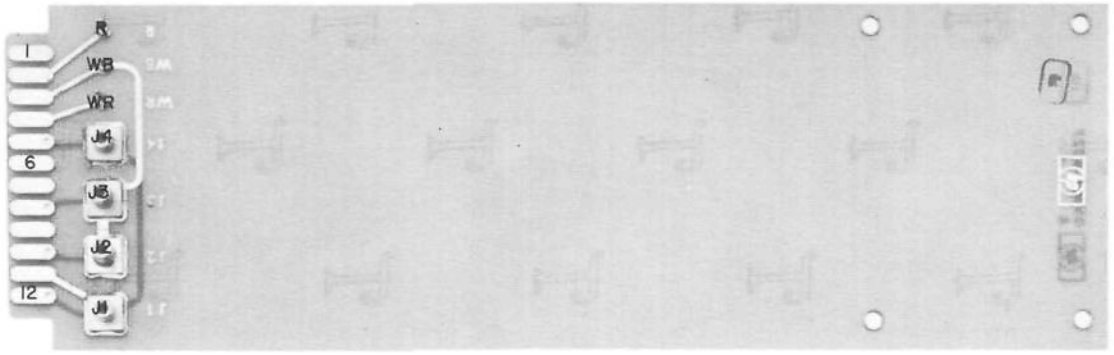
R
WB
WR
J4
J5
J2
J1
1
6
12

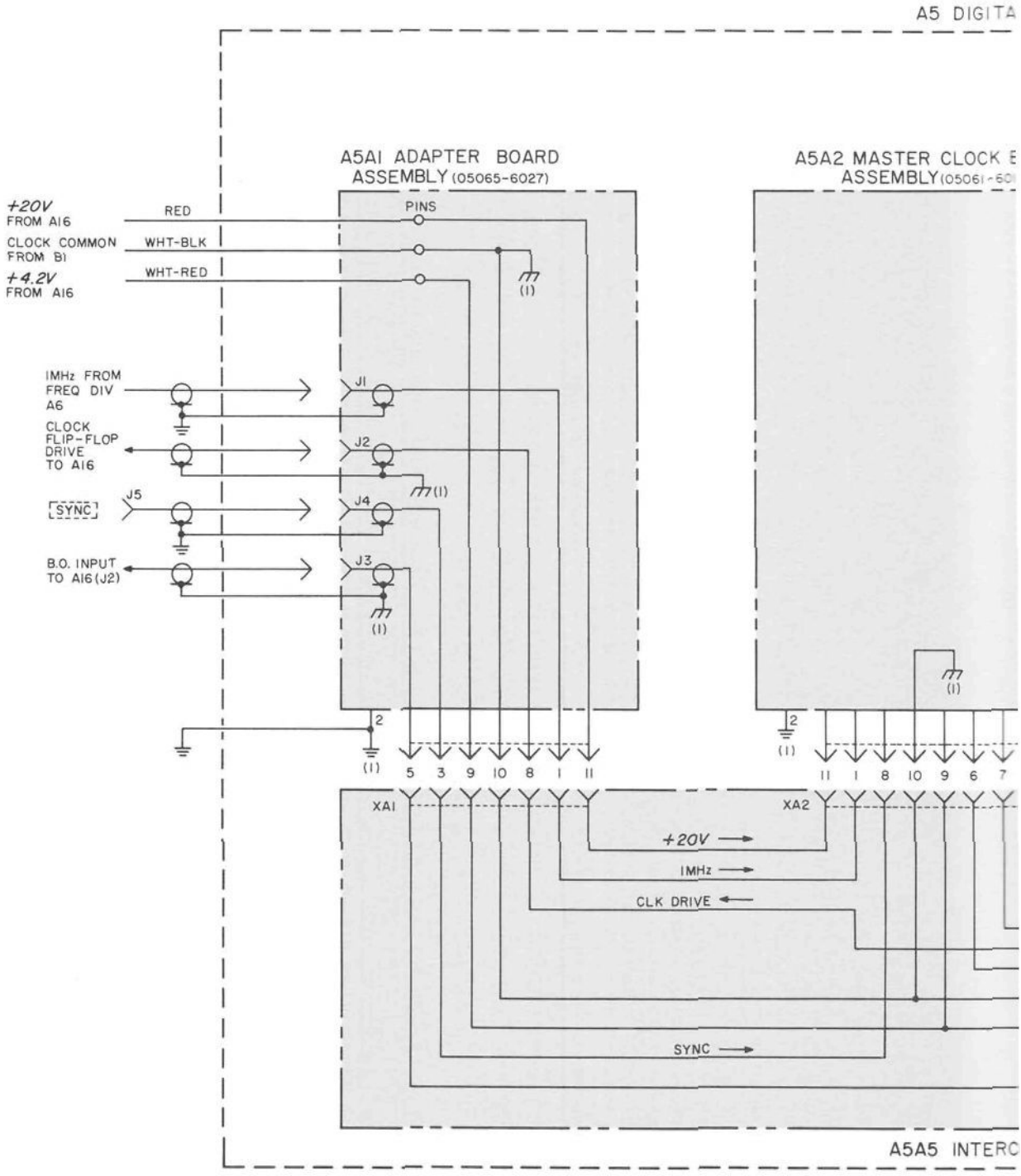

NOTES

1. REFERENCE DESIGNATIONS WITHIN THIS ASSEMBLY ARE ABBREVIATED. ADD ASSEMBLY NUMBER TO ABBREVIATION FOR COMPLETE DESCRIPTION.
2. UNLESS OTHERWISE INDICATED:
   RESISTANCE IN OHMS;
   CAPACITANCE IN PICOFARADS;
3. ASTERISK (*) INDICATES SELECTED COMPONENT, AVERAGE VALUES SHOWN.

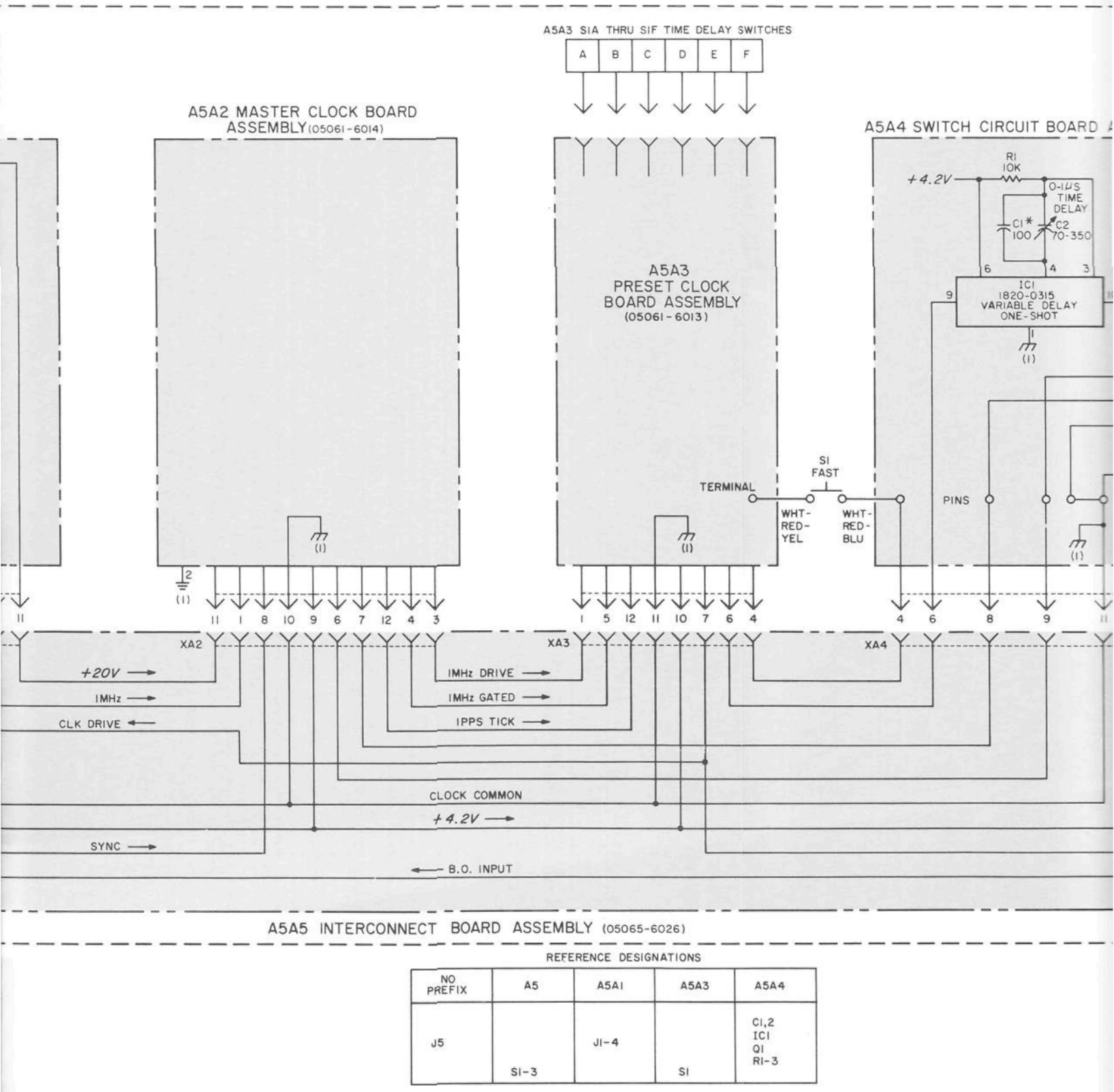

REFERENCE DESIGNATIONS

NO PREFIX	A5	A5A1	A5A3	A5A4
J5	S1-3	J1-4	S1	C1,2 IC1 Q1 R1-3

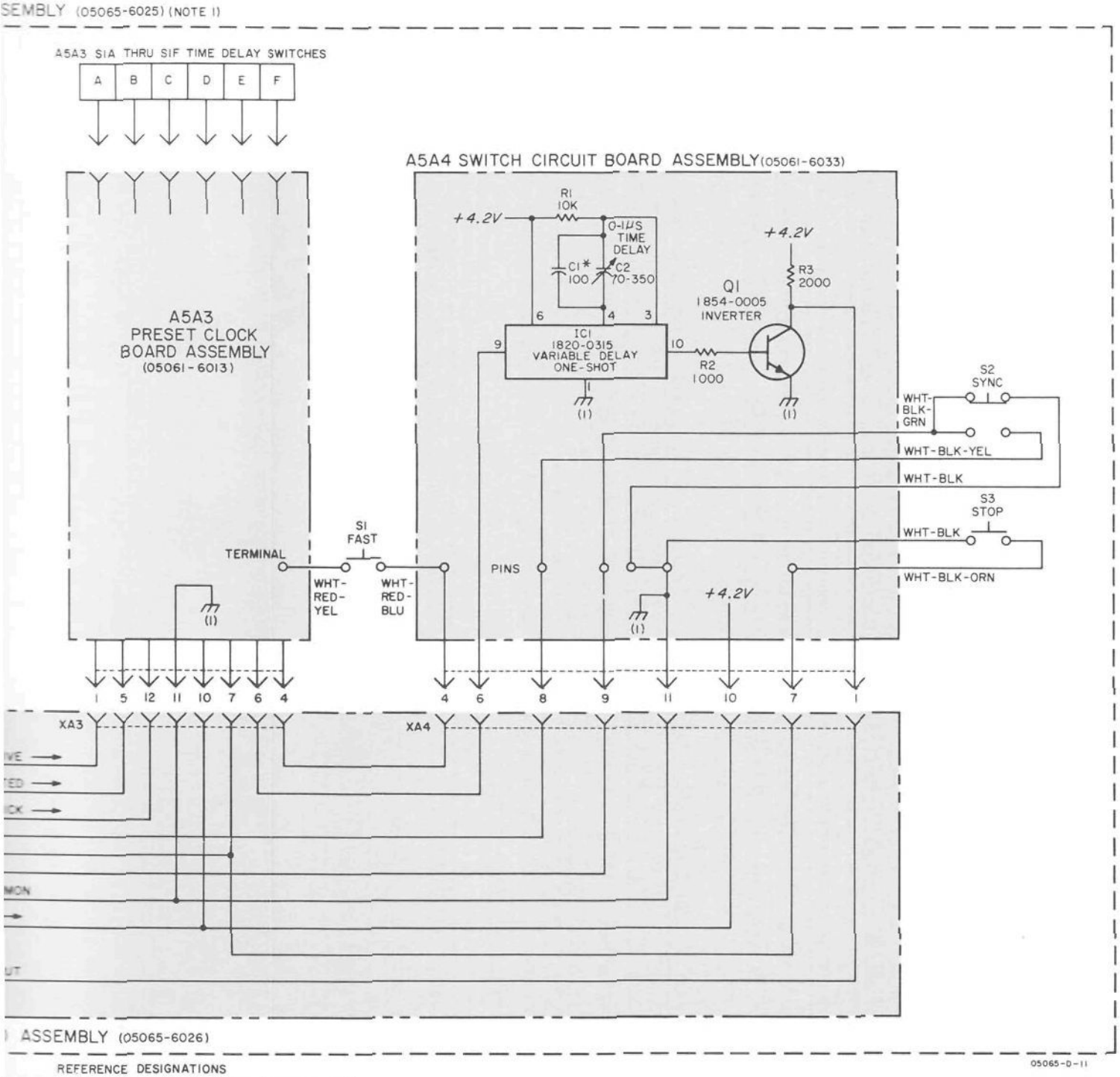

REFERENCE DESIGNATIONS

A5	A5A1	A5A3	A5A4
S1-3	J1-4	S1	C1,2 IC1 Q1 R1-3

Figure 7-19. A5 Digital Divider Assembly

Figure 7-20
A16 DIGITAL DIVIDER POWER SUPPLY ASSEMBLY

(See Page 7-57)

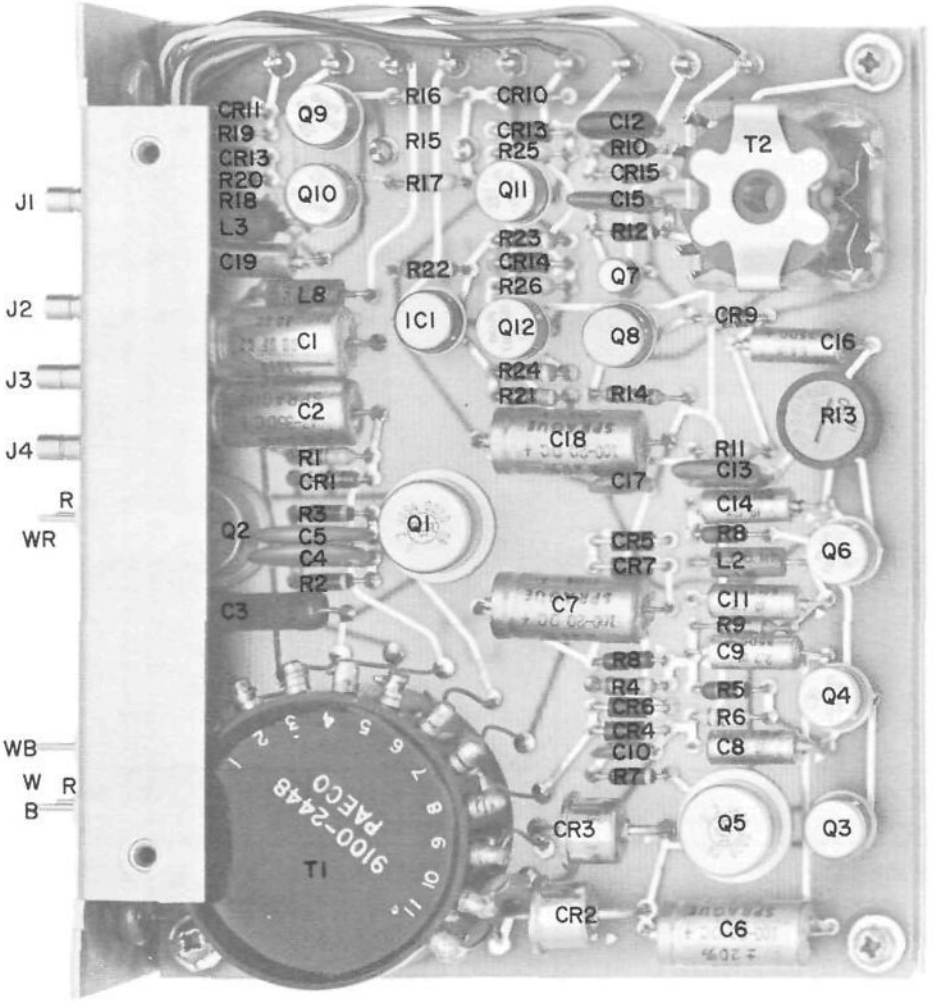
J1
J2
J3
J4
R
WR
WB
W
R
B
CR11
R19
CR13
R20
R18
L3
C19
L8
C1
C2
R1
CR1
R3
C5
C4
R2
C3
Q2
Q9
Q10
R16
R15
R17
CR10
CR13
R25
Q11
R23
CR14
R26
IC1
Q12
R24
R21
C18
C17
Q1
CR5
CR7
C7
R8
R4
CR6
CR4
C10
R7
CR3
CR2
C12
R10
CR15
C15
R12
Q7
Q8
T2
CR9
C16
R13
R14
R11
C13
C14
R8
L2
C11
R9
C9
R5
R6
C8
Q6
Q4
Q5
Q3
C6
T1
9100-2448
PAECO

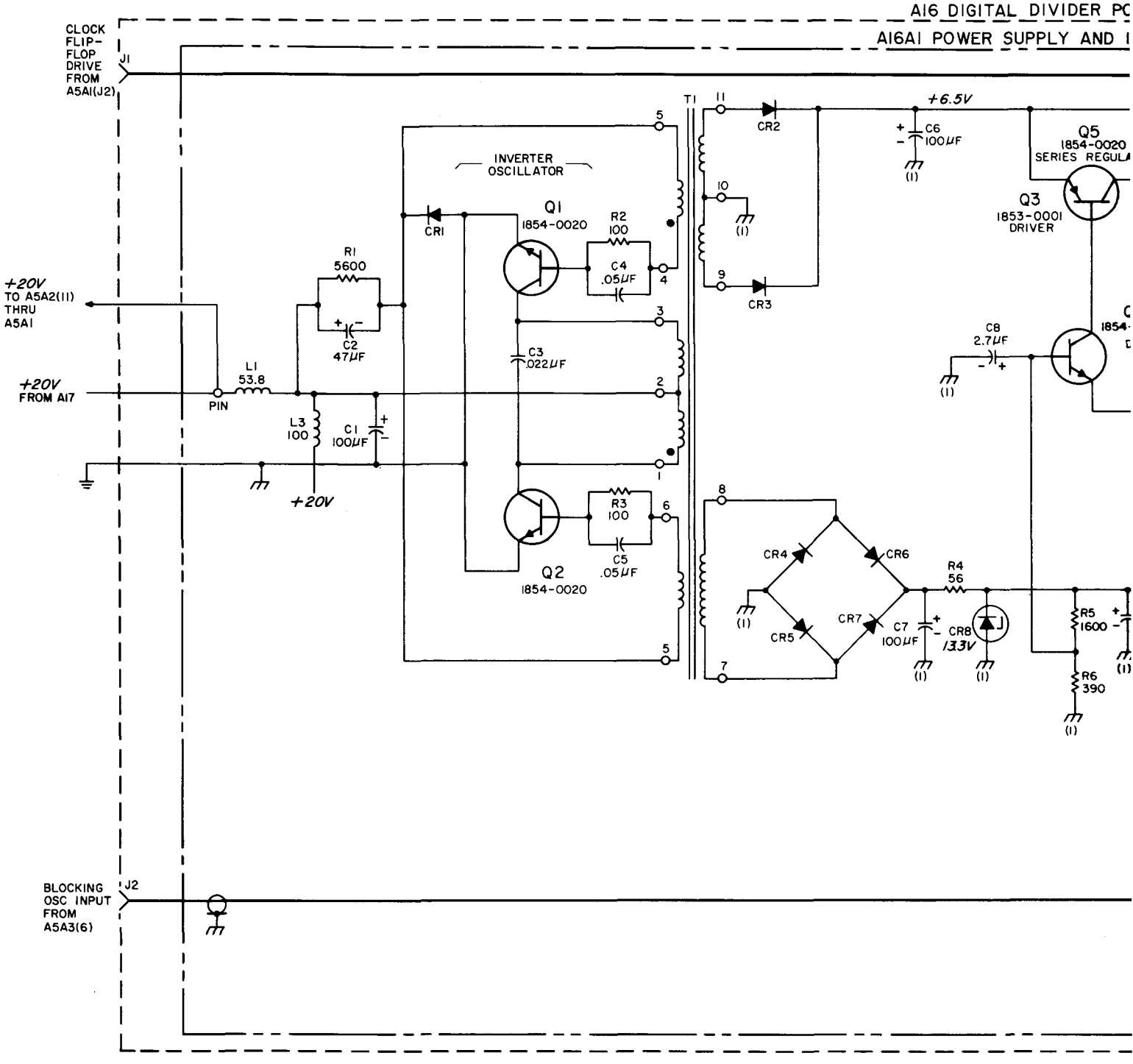

NOTES

1. REFERENCE DESIGNATIONS WITHIN THIS ASSEMBLY ARE ABBREVIATED. ADD ASSEMBLY NUMBER TO ABBREVIATION FOR COMPLETE DESCRIPTION.
2. UNLESS OTHERWISE INDICATED:
   RESISTANCE IN OHMS;
   CAPACITANCE IN PICOFARADS;
   INDUCTANCE IN MICROHENRIES
3. ASTERISK (*) INDICATES SELECTED COMPONENT, AVERAGE VALUES SHOWN

RE

NO PREFIX
J14

A16 DIGITAL DIVIDER POWER SUPPLY ASSEMBLY (05065-6028) (NOTE 1) SERIES 1104

A16A1 POWER SUPPLY AND IPPS OUTPUT BOARD ASSEMBLY (05065-6029)

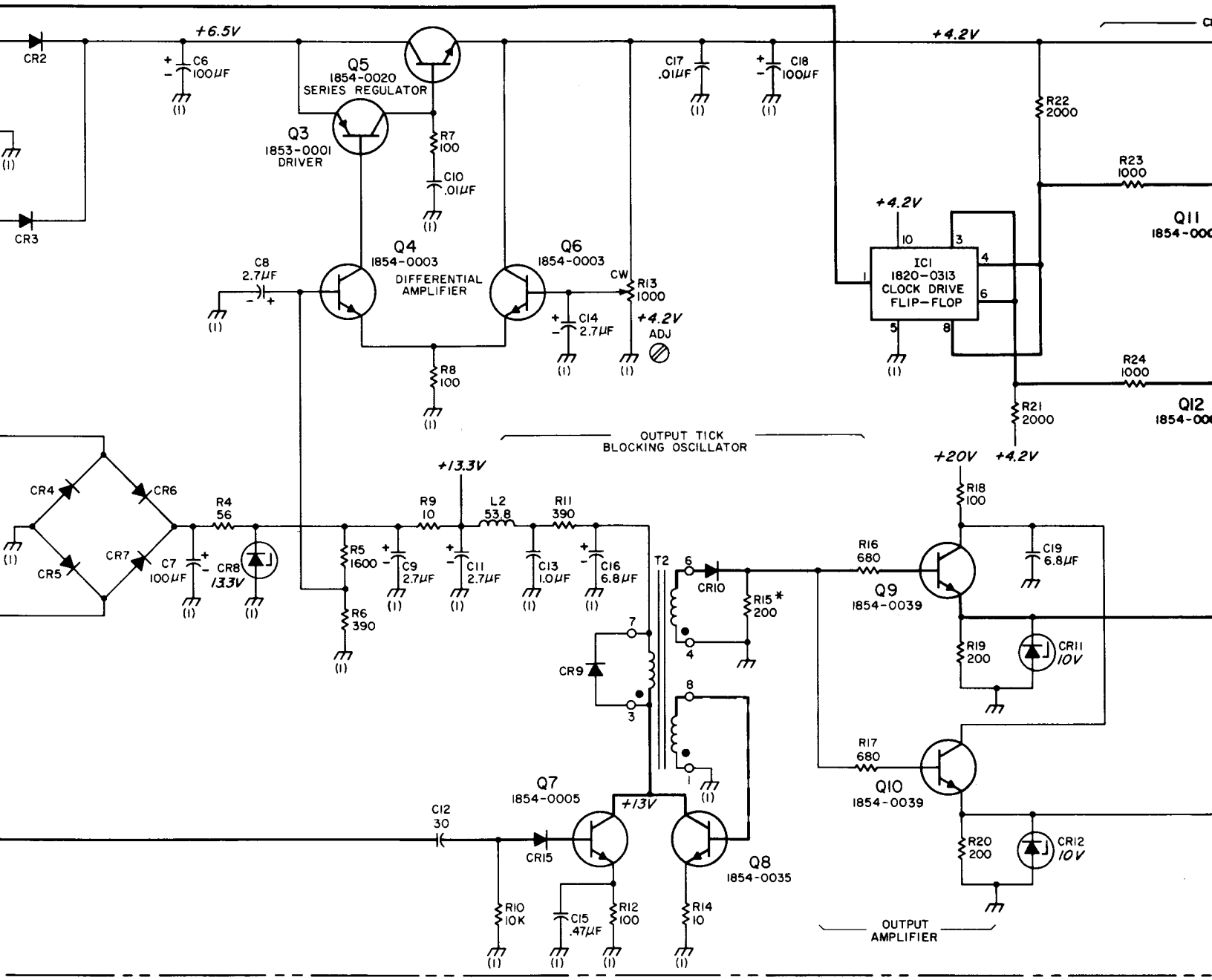

REFERENCE DESIGNATIONS

NO PREFIX	A16	A16A1
J14	J1-4	C1-19 CR1-15 IC1 L1-3 Q1-12 R1-26 T1,2

Figure

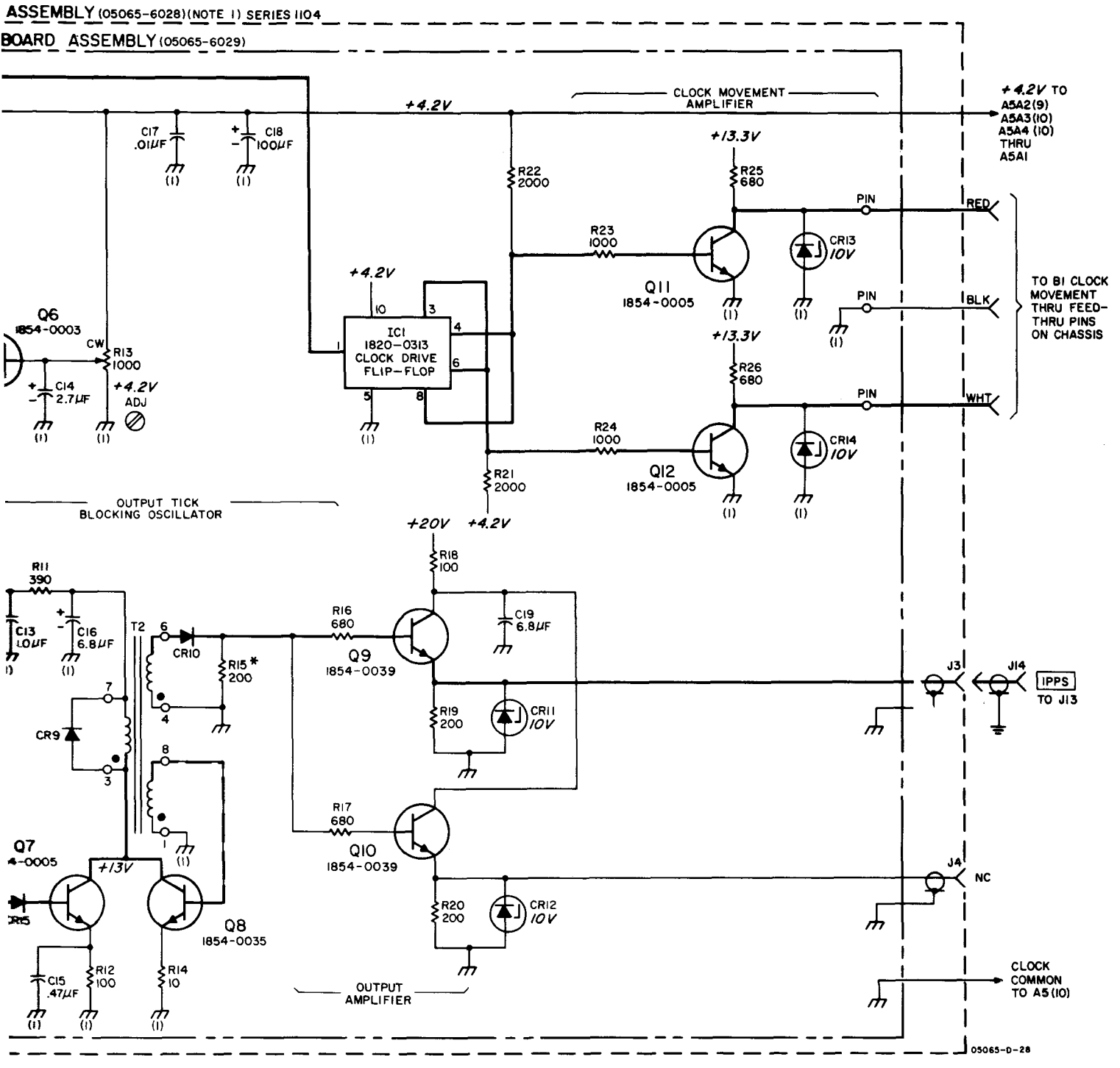

A16A1
C1-19
CR1-15
IC1
L1-3
Q1-12
R1-26
T1,2

Figure 7-20. A16 Digital Divider Power Supply Assembly

Page 6-23, Table 6-4, Option 001 (A5) Replaceable Parts:
Change A5 (05065-6084) series number from 1904 to 1840.

Page 6-26, Table 6-4, Option 001 (A5A4) Replaceable Parts:
Replace A5A4 (05061-6152) and all components for this assembly with A5A4 Part No. 05061-6033 and components in Table 7-12.

A5A4 05061-6033 (1840) PL here

Page 8-33, Figure 8-13, A5 Schematic Diagram:
Change A5 from series 1904 to 1840.
Replace A5A4 schematic diagram with diagram in attached Figure B for A5A4 P.N. 05061-6033 (SERIES 1840) circuit board assembly.
Replace A5A4 component locator illustration with new illustration in attached Figure C.

Page 8-35, Figure 8-14, Part of A5 Schematic Diagram and
Page 8-37, Figure 8-15, Part of A5 Schematic Diagram:
Change A5 series number at top of diagram from series 1904 to 1840.

NOTE

The previous A5A4 circuit board assembly used a variable capacitor instead of the newer potentiometer. The adjustment procedure is the same for both assemblies.

CHANGE C (Option 001 A5 Series 723)

NOTE

The following changes for A5 series number does not affect the serial prefix number of the instruments with A5 added for Option 001 or 003. The series number of the A5 module assembly may not be the same as the instrument serial prefix number.

Page 6-26 and 6-27, Table 6-4, Option 001 to 003 Replaceable Parts:
Change A5 module assembly (05065-6084) and A5A2 (05061-6014) series numbers to SERIES 723.
Change A5A2C13 to 0140-0202 (15 pf); FXD MICA 15PF 5% 500WVDC; 28480; 0140-0202.

Page 8-35, Figure 8-14, Part of A5 Schematic Diagram and
Page 8-37, Figure 8-15, Part of Schematic Diagram:
Change A5 series number at top of both schematics to SERIES 723.

Page 8-35, Figure 8-14, A5A2 (05061-6014) Schematic Diagram:
Change series number at top of schematic to SERIES 723.
Change the value of A5A2C13 from 10pf to 15pf.

Table 7-12. A5A4 Parts List

Reference Designation	HP Part Number	Qty	Description	Mfr Code	Part Number
A5A4	05061-6033	1	BOARD ASSY: SWITCH	28480	05061-6033
A5A4C1	0140-0176	1	C: FXD MICA 100 PF 2%	28480	0140-0176
A5A4C2	0131-0006	1	C: VAR MICA 70-350 PF 175VDCW	28480	0131-0006
A5A4IC1	1820-0315		INTEGRATED CIRCUIT	28480	1820-0315
A5A4Q1	1854-0005		TSTR: SI NPN	80131	2N708
A5A4R1	0757-0948		R: FXD FLM 10K OHM 2% 1/8W	28480	0757-0948
A5A4R2	0757-0924		R: FXD MET FLM 1K OHM 2% 1/8W	28480	0757-0924
A5A4R3	0757-0931		R: FXD FLM 2K OHM 2% 1/8W	28480	0757-0931

SECTION VIII
CIRCUIT DIAGRAMS, THEORY, AND MAINTENANCE

8-1. GENERAL

8-2. This section contains block, wiring, schematic, waveform, and component locators for the Model 5065A.

8-3. Shaded area on schematic diagrams indicate printed circuit board assemblies. Components within shaded areas are mounted on boards.

8-4. Theory and maintenance of assemblies is beside the schematic.

Figure 8-1. Schematic Diagram Notes

SYMBOLS

- FRONT PANEL
- REAR PANEL
- INTERIOR AND PC BOARDS
- WIPER MOVES TOWARD "CW" WHEN CONTROL IS ROTATED CLOCKWISE
- POWER LINE GROUND
- CIRCUIT COMMON GROUND
- FLOATING GROUND
- CHASSIS GROUND
- KNOB CONTROL
- SCREWDRIVER ADJUST
- MAIN SIGNAL PATH
- FEEDBACK PATH
- TEST POINT
- "AND" GATE
- "OR" GATE
- INVERTER
- NAND GATE
- NOR GATE
- EXCLUSIVE NOR

SWITCH DESIGNATIONS

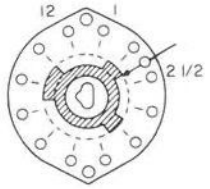

A3S1		SWITCH S1 WITHIN ASSEMBLY A3
B		2ND WAFER FROM FRONT (A=1ST, ETC)
R		REAR OF WAFER (F=FRONT)
A3S1BR(2-1/2)	(2-1/2)	TERMINAL LOCATION ($2\frac{1}{2}$) (VIEWED FROM FRONT)

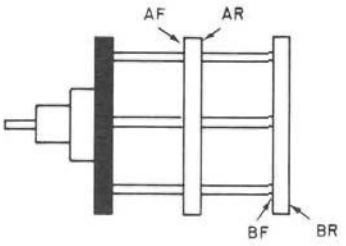

REFERENCE DESIGNATIONS

REFERENCE DESIGNATIONS WITHIN ASSEMBLIES ARE ABBREVIATED. ADD ASSEMBLY NUMBER TO ABBREVIATION FOR COMPLETE DESCRIPTION. JACKS ARE THE STATIONARY CONNECTORS AND PLUGS ARE THE MORE MOVEABLE OF TWO CONNECTORS.

ASSEMBLY	ABBREVIATION	COMPLETE DESCRIPTION
A25	C1	A25C1
A25A1	CR1	A25A1CR1
NO PREFIX	J3	J3

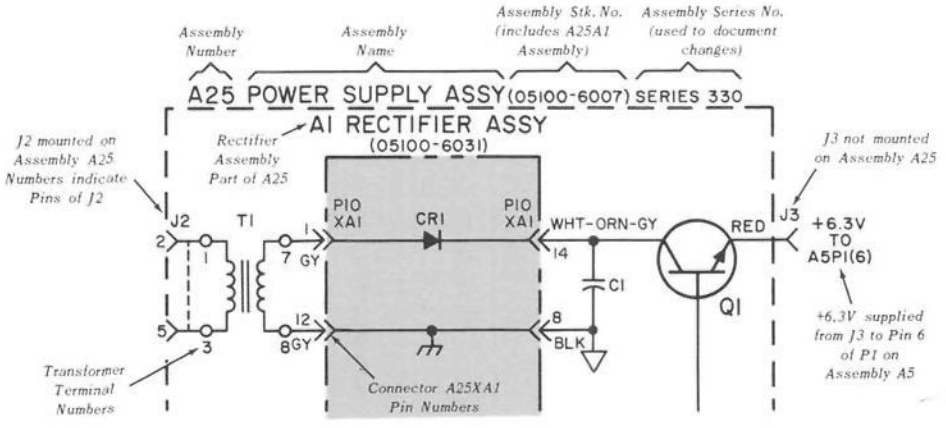

Figure 8-2
BLOCK DIAGRAM

(See Page 8-3)

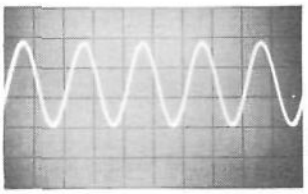

❶ 1 V/cm, .1 μs/cm
into 50Ω LOAD

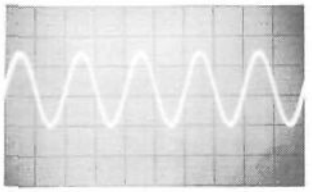

❷ 1 V/cm, .1 μs/cm



❸ .5 V/cm, 5 ms/cm



❹ .5 V/cm, .1 μs/cm

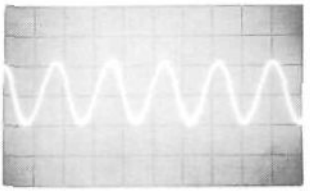

❺ 2 V/cm, 2 ms/cm



❻ .5 V/cm, .1 μs/cm

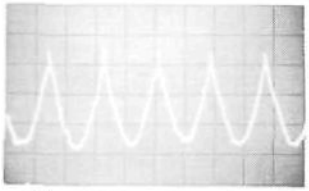

❼ .5 V/cm, 2 ms/cm
LOOP OPEN OSC.
FINE at 300

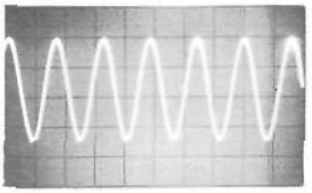

❽ .5 V/cm, .1 ms/cm

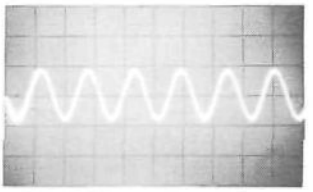

❾ .5 V/cm, .1 ms/cm

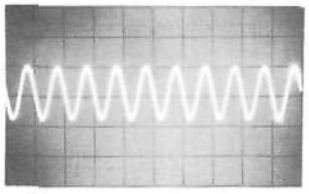

❿ .5 V/cm, .1 μs/cm

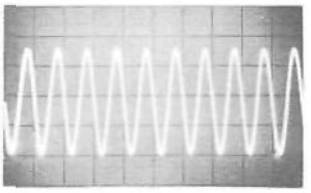

⓫ .5 V/cm, .1 μs/cm



⓬ .2 V/cm, 2 ms/cm
LOOP OPEN, OSC.
COARSE SET FOR
MAX SIGNAL



⓭ .05 V/cm, 2 μs/cm
LOOP OPEN, OSC.
COARSE SET FOR
MAX 2nd HARMONIC



⓮ .05 V/cm, .1 μs/cm

5065A: Normal operation unless noted.
Oscilloscope: DC coupled

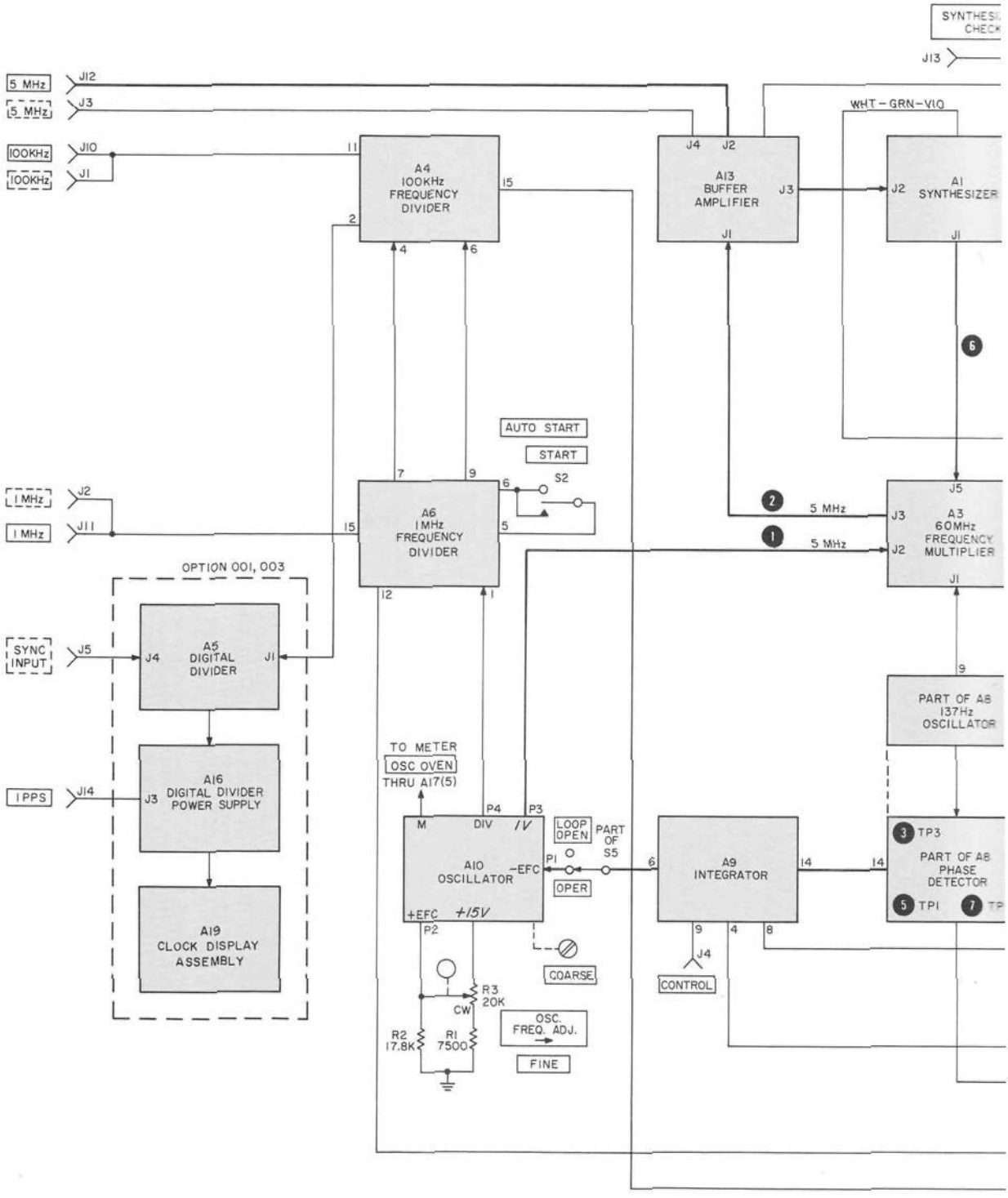
SYNTHESI
CHECK
J13
5 MHz
J12
5 MHz
J3
100KHz
J10
100KHz
J11
WHT - GRN - VIO
A4
100KHz
FREQUENCY
DIVIDER
A13
BUFFER
AMPLIFIER
A1
SYNTHESIZER
AUTO START
START
S2
1MHz
J2
1 MHz
J11
A6
1MHz
FREQUENCY
DIVIDER
5 MHz
5 MHz
A3
60MHz
FREQUENCY
MULTIPLIER
OPTION 001, 003
SYNC
INPUT
J5
A5
DIGITAL
DIVIDER
PART OF A8
137Hz
OSCILLATOR
1PPS
J14
A16
DIGITAL DIVIDER
POWER SUPPLY
TO METER
OSC OVEN
THRU A17(5)
M
DIV
1V
A10
OSCILLATOR
-EFC
+EFC
+15V
LOOP
OPEN
PART
OF
S5
OPER
A9
INTEGRATOR
TP3
PART OF A8
PHASE
DETECTOR
TP1
TP
CONTROL
COARSE
R3
20K
CW
R2
17.8K
R1
7500
OSC.
FREQ. ADJ.
FINE
A19
CLOCK DISPLAY
ASSEMBLY

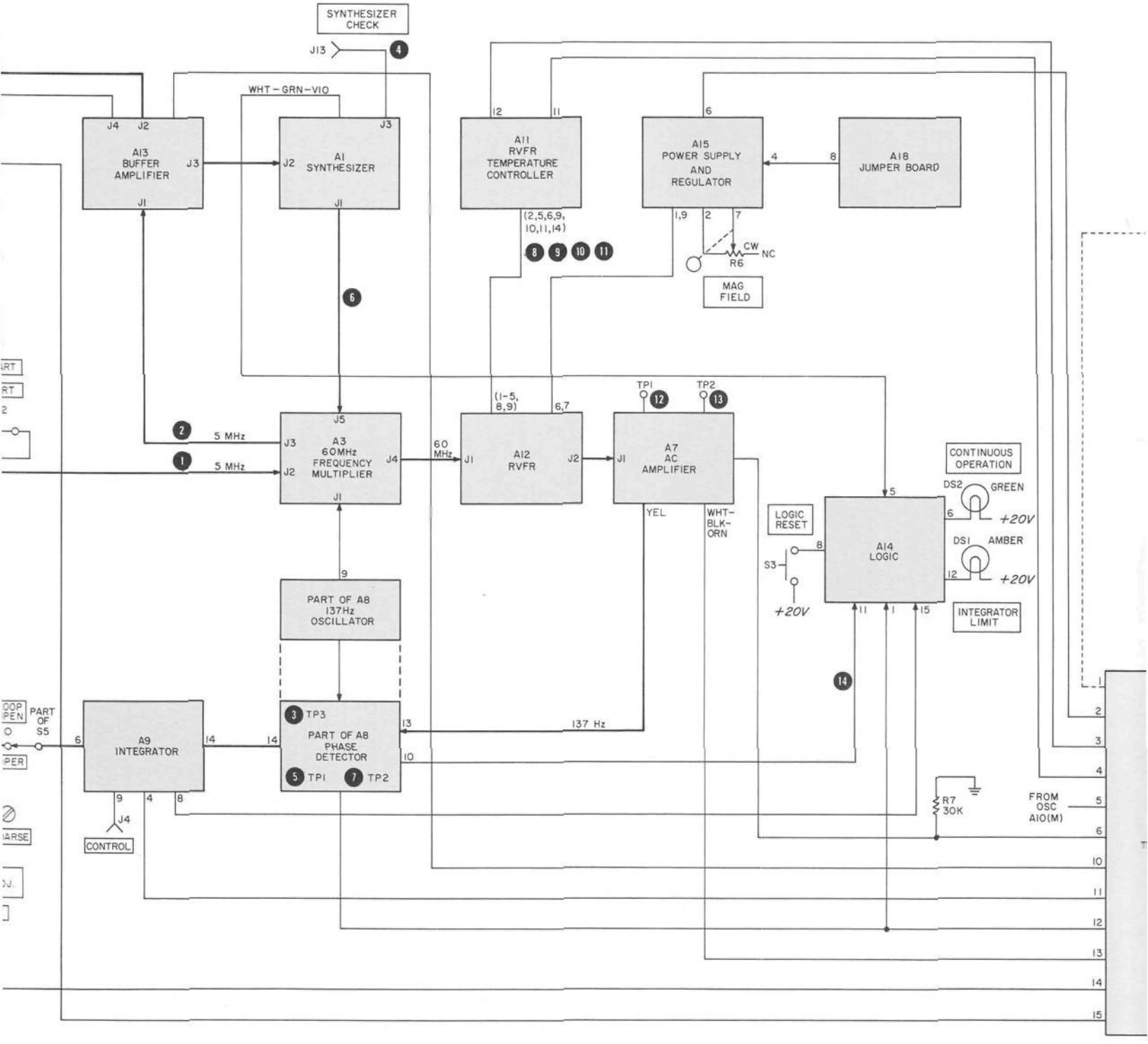
SYNTHESIZER CHECK
J13
4
WHT-GRN-VIO
A13 BUFFER AMPLIFIER
J4 J2 J3 J1
A1 SYNTHESIZER
J3 J2 J1
A11 RVFR TEMPERATURE CONTROLLER
12 11
A15 POWER SUPPLY AND REGULATOR
6 4 8
A18 JUMPER BOARD
(2,5,6,9, 10,11,14)
8 9 10 11
1,9 2 7
CW R6 NC
MAG FIELD
6
2 5 MHz
1 5 MHz
J5
A3 60MHz FREQUENCY MULTIPLIER
J3 J2 J1 J4
60 MHz
A12 RVFR
J1 J2
(1-5, 8,9)
6,7
TP1 12
TP2 13
A7 AC AMPLIFIER
J1
YEL
WHT-BLK-ORN
CONTINUOUS OPERATION
DS2 GREEN
6 +20V
DS1 AMBER
12 +20V
LOGIC RESET
S3
+20V
8
A14 LOGIC
5
11 1 15
INTEGRATOR LIMIT
14
9
PART OF A8 137Hz OSCILLATOR
3 TP3
PART OF A8 PHASE DETECTOR
5 TP1 7 TP2
13
137 Hz
10
A9 INTEGRATOR
6 14 14
9 4 8
J4
CONTROL
PART OF S5
R7 30K
FROM OSC A10(M)
5
6
10
11
12
13
14
15

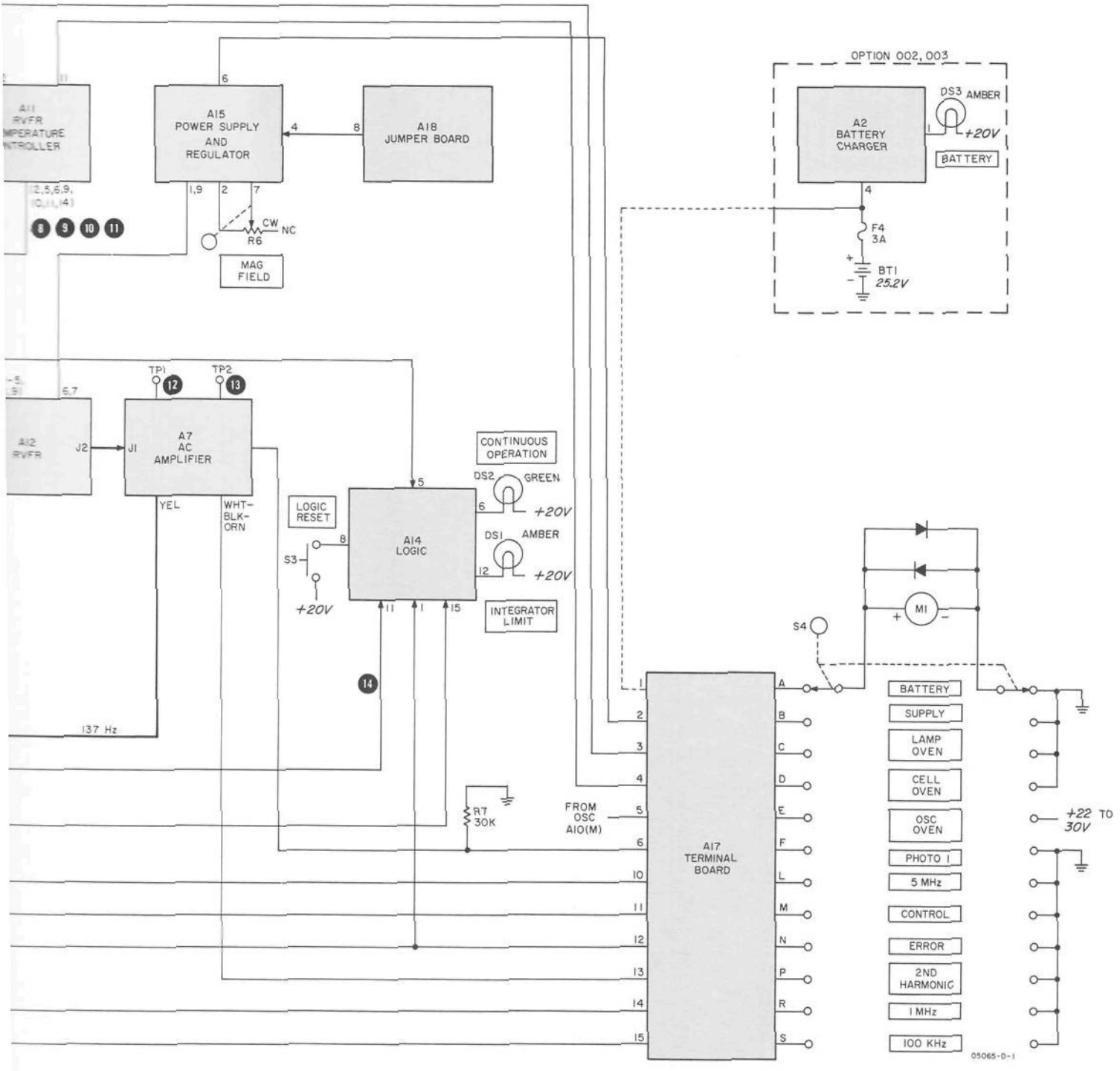

Figure 8-2. Block Diagram

Figure 8-3. Front and Rear Panel and Top Internal Views

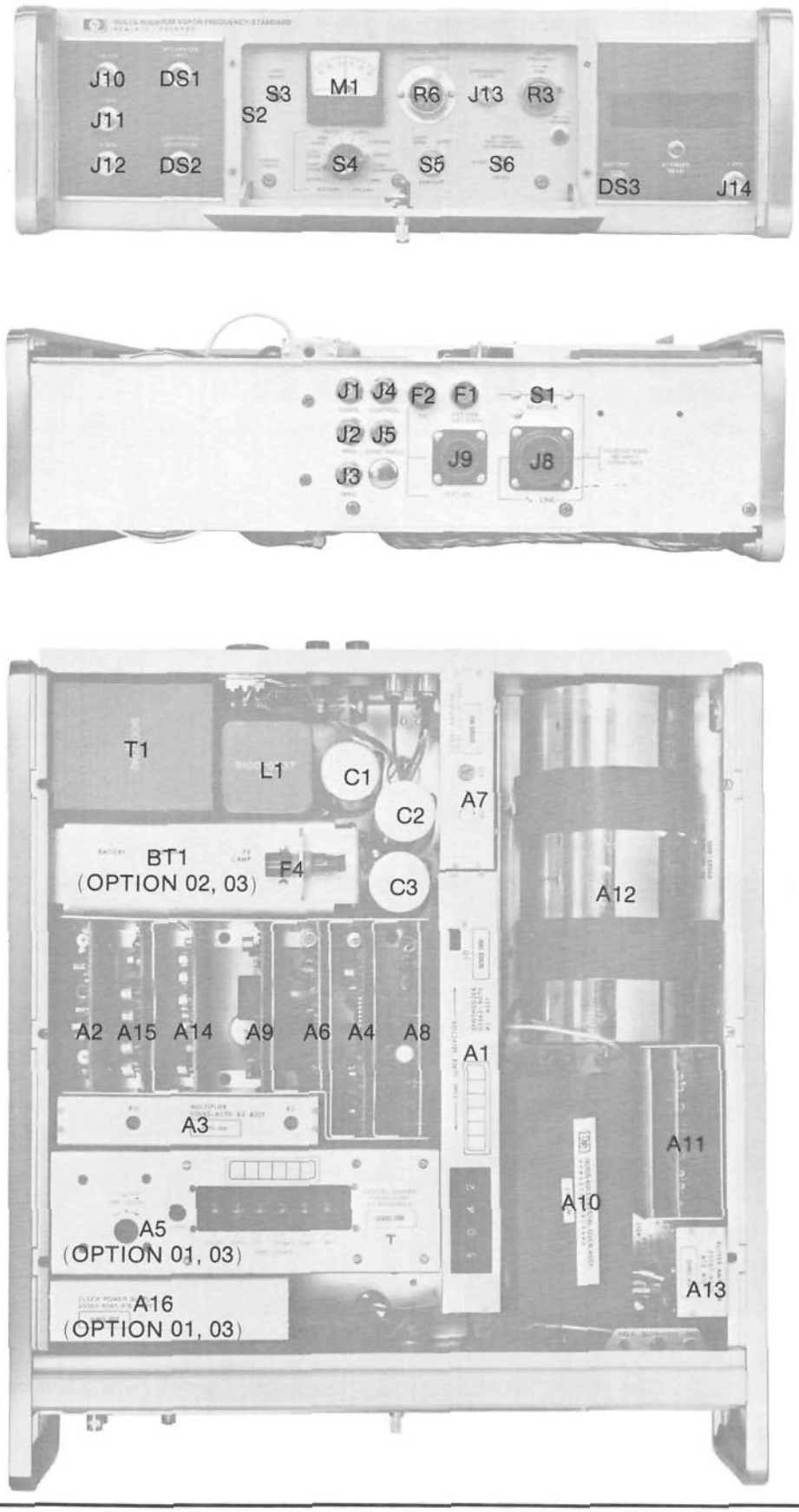

Figure 8-4
WIRING DIAGRAM (Sheet 1 of 3)

(See Page 8-5)

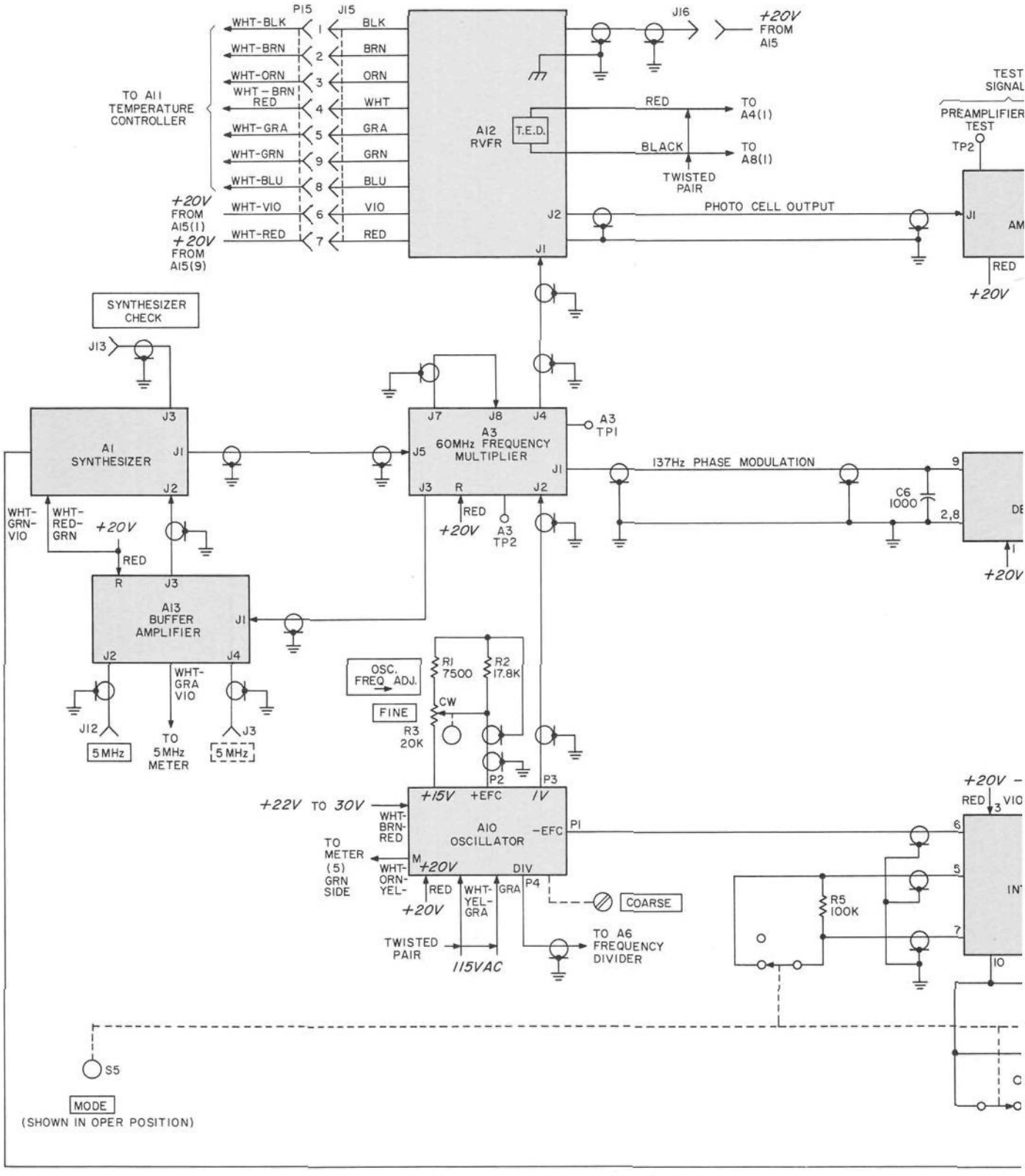
P15
J15
WHT-BLK
WHT-BRN
WHT-ORN
WHT-BRN
RED
WHT-GRA
WHT-GRN
WHT-BLU
WHT-VIO
WHT-RED
BLK
BRN
ORN
WHT
GRA
GRN
BLU
VIO
RED
TO A11 TEMPERATURE CONTROLLER
+20V FROM A15(1)
+20V FROM A15(9)
A12 RVFR
T.E.D.
J16
+20V FROM A15
RED
TO A4(1)
BLACK
TO A8(1)
TWISTED PAIR
PHOTO CELL OUTPUT
J2
J1
TEST SIGNAL
PREAMPLIFIER TEST
TP2
RED
+20V
SYNTHESIZER CHECK
J13
A1 SYNTHESIZER
J3
J1
J2
WHT-GRN-VIO
WHT-RED-GRN
+20V
RED
A3 60MHz FREQUENCY MULTIPLIER
J7
J8
J4
J5
J1
J3
R
J2
A3 TP1
A3 TP2
137Hz PHASE MODULATION
C6 1000
9
2,8
A13 BUFFER AMPLIFIER
J2
J4
WHT-GRA VIO
J12
5MHz
TO 5MHz METER
J3
5MHz
OSC. FREQ. ADJ.
FINE
R1 7500
R2 17.8K
CW
R3 20K
P2
P3
+22V TO 30V
WHT-BRN-RED
+15V
+EFC
-EFC
-15V
A10 OSCILLATOR
P1
TO METER (5) GRN SIDE
WHT-ORN-YEL
M
+20V
DIV
P4
RED
WHT-YEL-GRA
+20V
TWISTED PAIR
115VAC
COARSE
TO A6 FREQUENCY DIVIDER
R5 100K
S5
MODE
(SHOWN IN OPER POSITION)

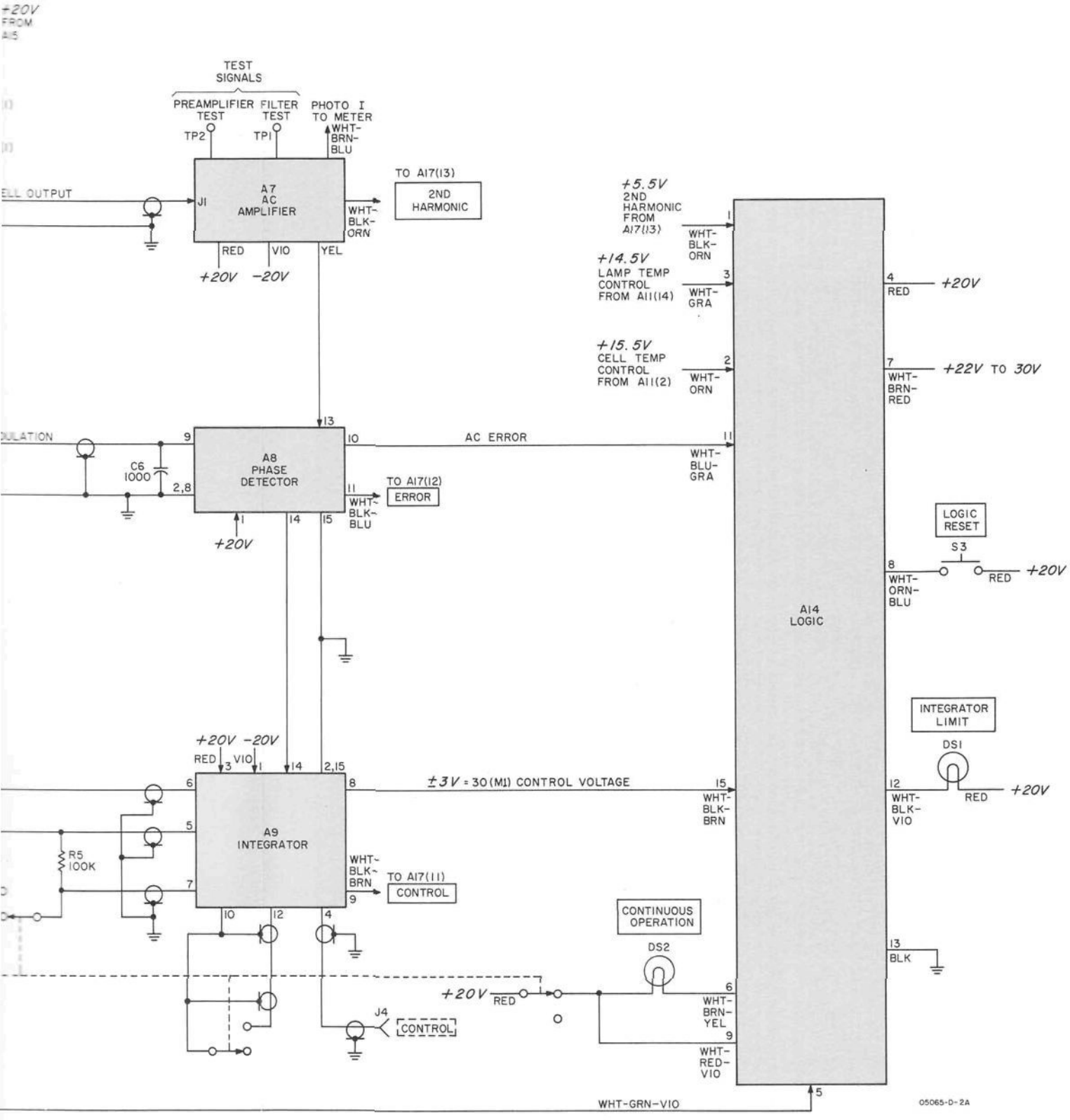

Figure 8-4. Wiring Diagram (Sheet 1 of 3)

Figure 8-5. Bottom Internal View

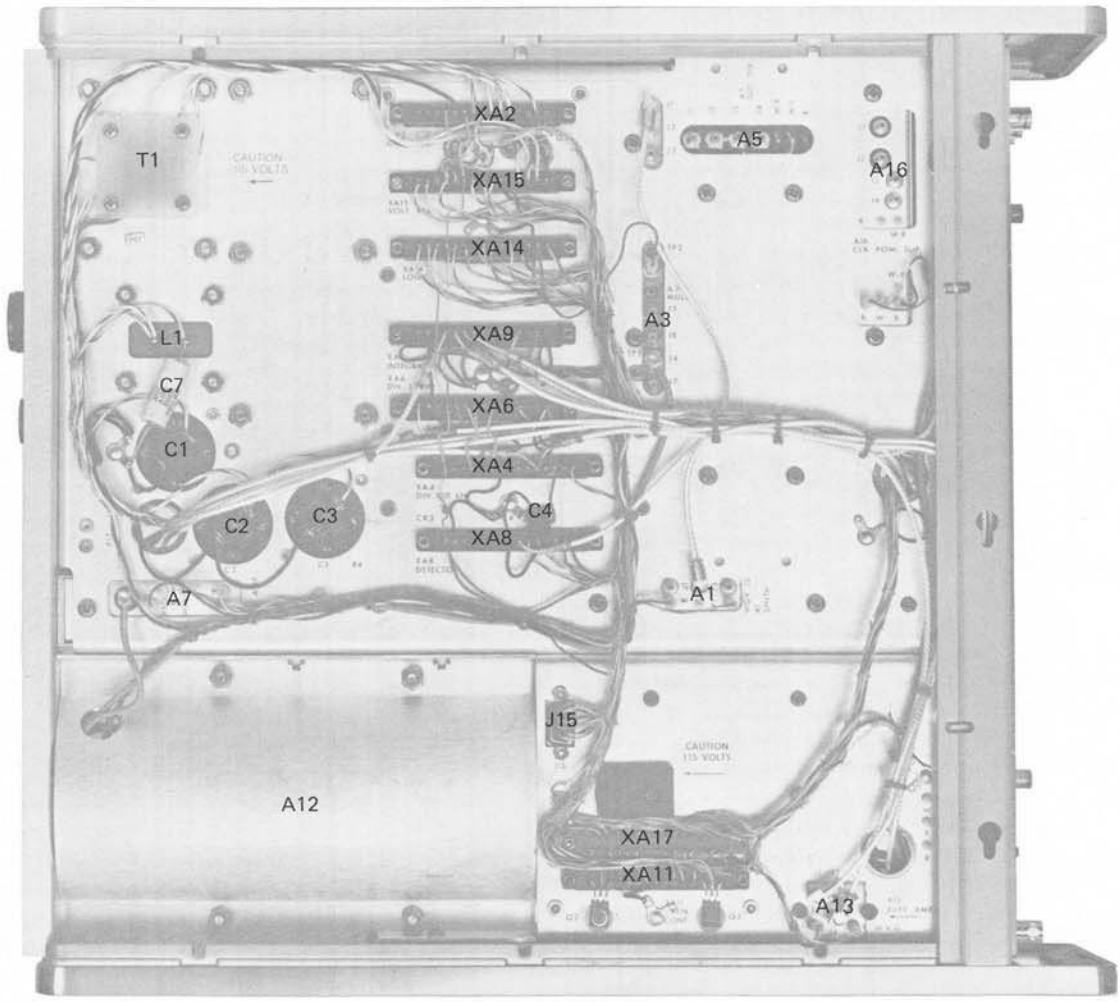

Figure 8-6
WIRING DIAGRAM (Sheet 2 of 3)

(See Page 8-7)

A17

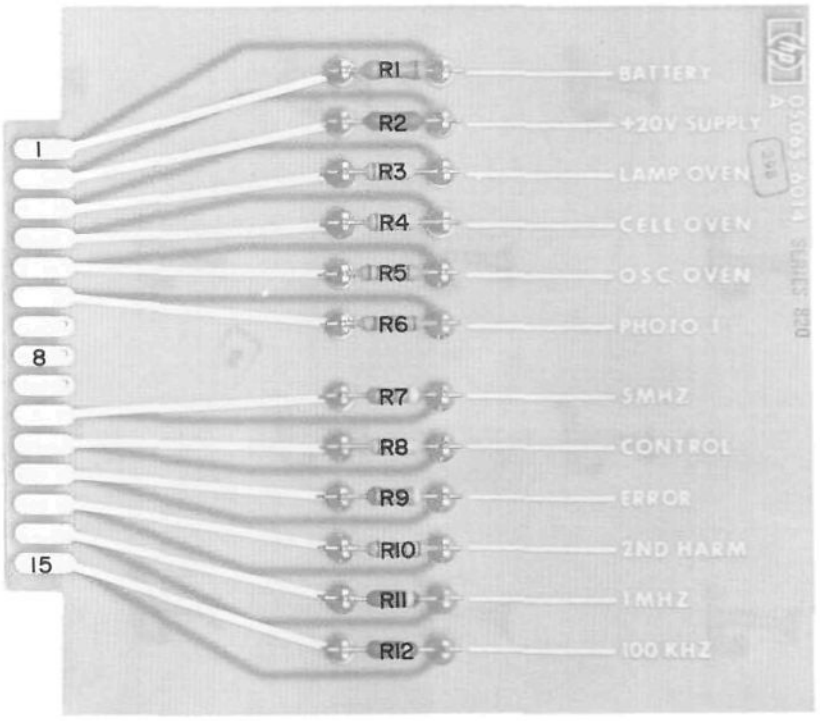
R1
R2
R3
R4
R5
R6
R7
R8
R9
R10
R11
R12
1
8
15
BATTERY
+20V SUPPLY
LAMP OVEN
CELL OVEN
OSC OVEN
PHOTO 1
5MHZ
CONTROL
ERROR
2ND HARM
1MHZ
100 KHZ

A18

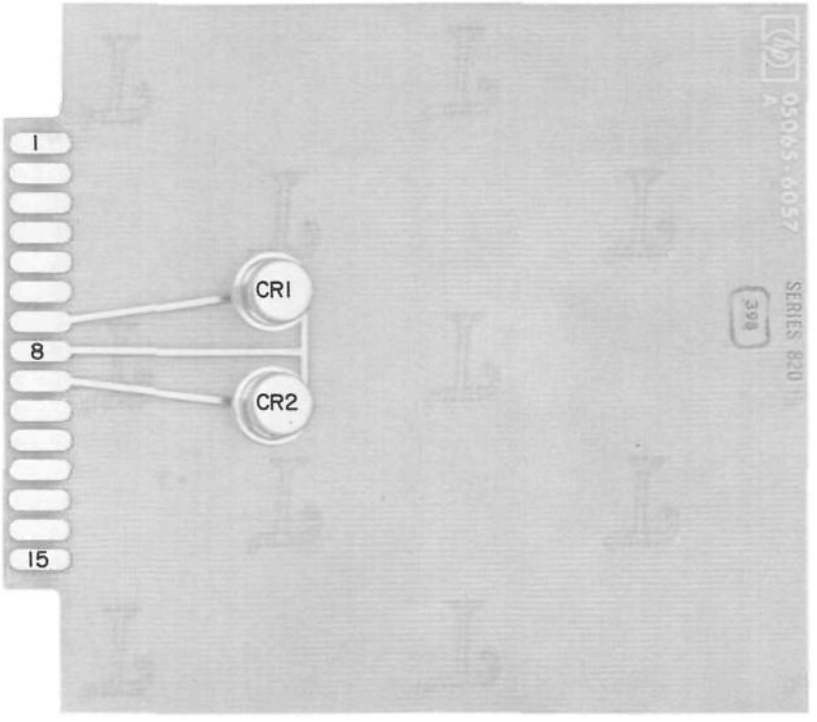
1
8
15
CR1
CR2

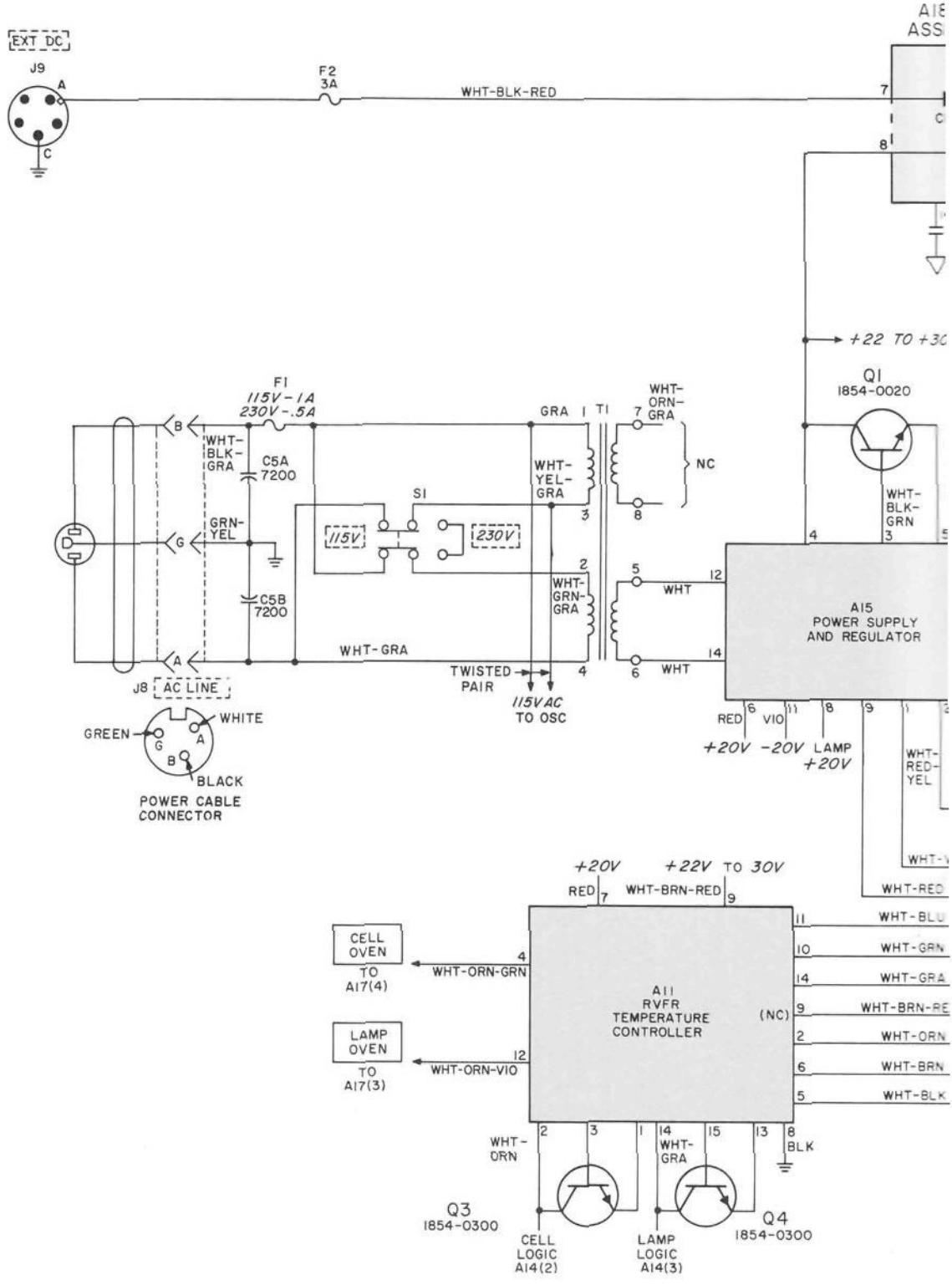
EXT DC
J9
A
C
F2
3A
WHT-BLK-RED
7
8
+22 TO +30
Q1
1854-0020
F1
115V-1A
230V-.5A
B
G
A
WHT-
BLK-
GRA
C5A
7200
GRN-
YEL
C5B
7200
WHT-GRA
J8 AC LINE
GRA
1
T1
7
WHT-
ORN-
GRA
NC
8
WHT-
YEL-
GRA
3
S1
115V
230V
2
WHT-
GRN-
GRA
4
5
12
WHT
14
6
WHT
TWISTED
PAIR
115VAC
TO OSC
WHT-
BLK-
GRN
3
A15
POWER SUPPLY
AND REGULATOR
RED
6
VIO
11
8
+20V
-20V
LAMP
+20V
9
WHT-
RED-
YEL
WHT-RED
GREEN
WHITE
BLACK
POWER CABLE
CONNECTOR
+20V
+22V TO 30V
RED
7
WHT-BRN-RED
9
CELL
OVEN
TO
A17(4)
4
WHT-ORN-GRN
LAMP
OVEN
TO
A17(3)
12
WHT-ORN-VIO
A11
RVFR
TEMPERATURE
CONTROLLER
(NC)
11
WHT-BLU
10
WHT-GRN
14
WHT-GRA
9
WHT-BRN-RE
2
WHT-ORN
6
WHT-BRN
5
WHT-BLK
WHT-
ORN
2
3
1
14
WHT-
GRA
15
13
8
BLK
Q3
1854-0300
Q4
1854-0300
CELL
LOGIC
A14(2)
LAMP
LOGIC
A14(3)

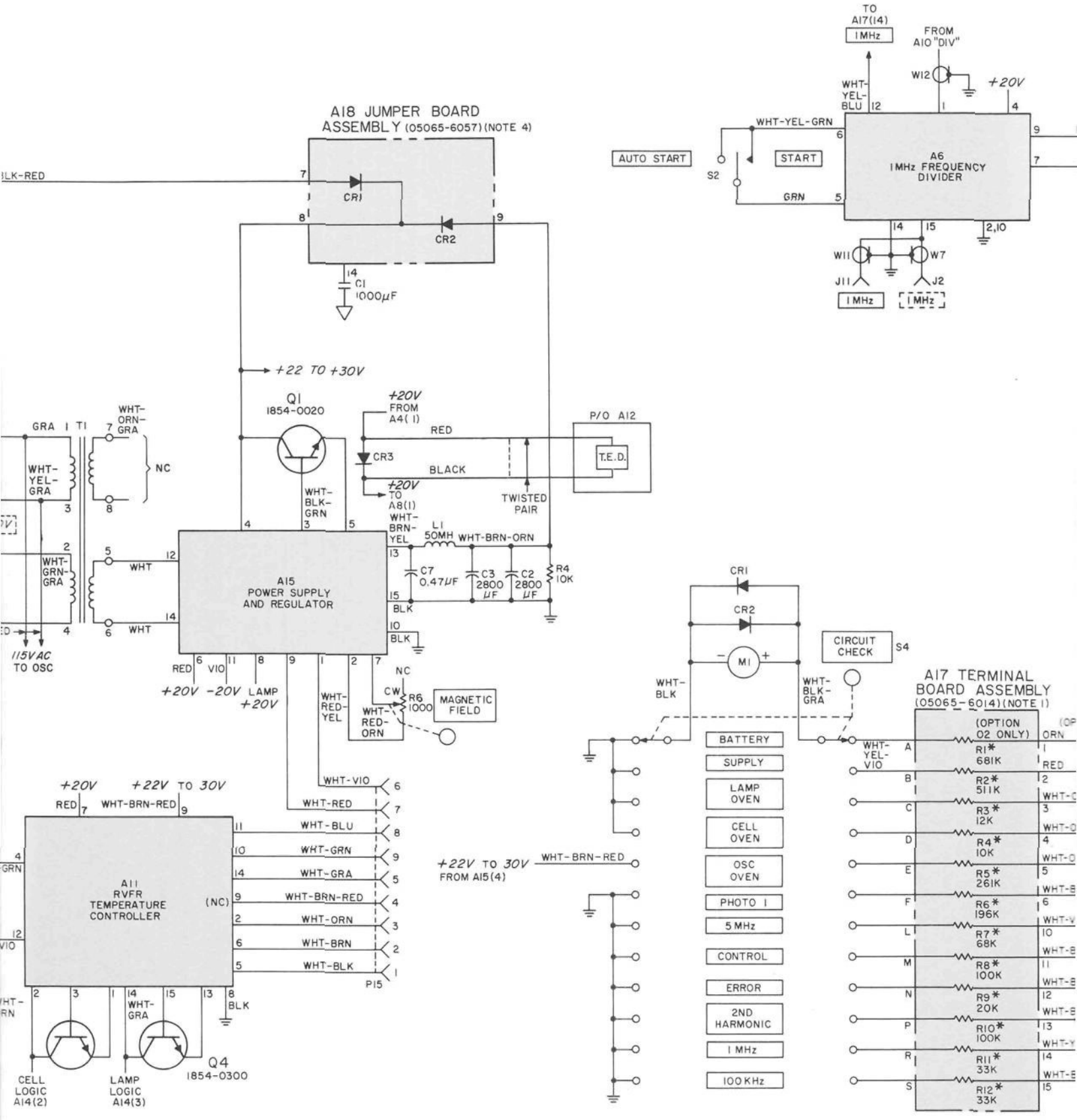
A18 JUMPER BOARD ASSEMBLY (05065-6057) (NOTE 4)
CR1
CR2
C1 1000μF
+22 TO +30V
Q1 1854-0020
+20V FROM A4(1)
CR3
RED
BLACK
P/O A12
T.E.D.
TWISTED PAIR
+20V TO A8(1)
WHT-BLK-GRN
WHT-BRN-YEL
L1 50MH
WHT-BRN-ORN
C7 0.47μF
C3 2800 μF
C2 2800 μF
R4 10K
A15 POWER SUPPLY AND REGULATOR
WHT-ORN-GRA
WHT-YEL-GRA
WHT-GRN-GRA
NC
WHT
115VAC TO OSC
RED +20V
VIO -20V
LAMP +20V
NC
CW
R6 1000
MAGNETIC FIELD
WHT-RED-YEL
WHT-RED-ORN
TO A17(14) 1MHz
FROM A10 "DIV"
W12
+20V
WHT-YEL-BLU
WHT-YEL-GRN
AUTO START
S2
START
GRN
A6 1MHz FREQUENCY DIVIDER
2,10
W11
W7
J11
J2
1MHz
1MHz
CR1
CR2
M1
CIRCUIT CHECK
S4
WHT-BLK
WHT-BLK-GRA
BATTERY
SUPPLY
LAMP OVEN
CELL OVEN
OSC OVEN
PHOTO 1
5MHz
CONTROL
ERROR
2ND HARMONIC
1MHz
100KHz
+22V TO 30V FROM A15(4)
WHT-BRN-RED
A17 TERMINAL BOARD ASSEMBLY (05065-6014) (NOTE 1)
(OPTION 02 ONLY)
WHT-YEL-VIO
R1* 681K
R2* 511K
R3* 12K
R4* 10K
R5* 261K
R6* 196K
R7* 68K
R8* 100K
R9* 20K
R10* 100K
R11* 33K
R12* 33K
RED
ORN
A11 RVFR TEMPERATURE CONTROLLER
+20V
+22V TO 30V
RED
WHT-BRN-RED
WHT-VIO
WHT-RED
WHT-BLU
WHT-GRN
WHT-GRA
WHT-BRN-RED
WHT-ORN
WHT-BRN
WHT-BLK
P15
(NC)
BLK
WHT-GRA
Q4 1854-0300
CELL LOGIC A14(2)
LAMP LOGIC A14(3)

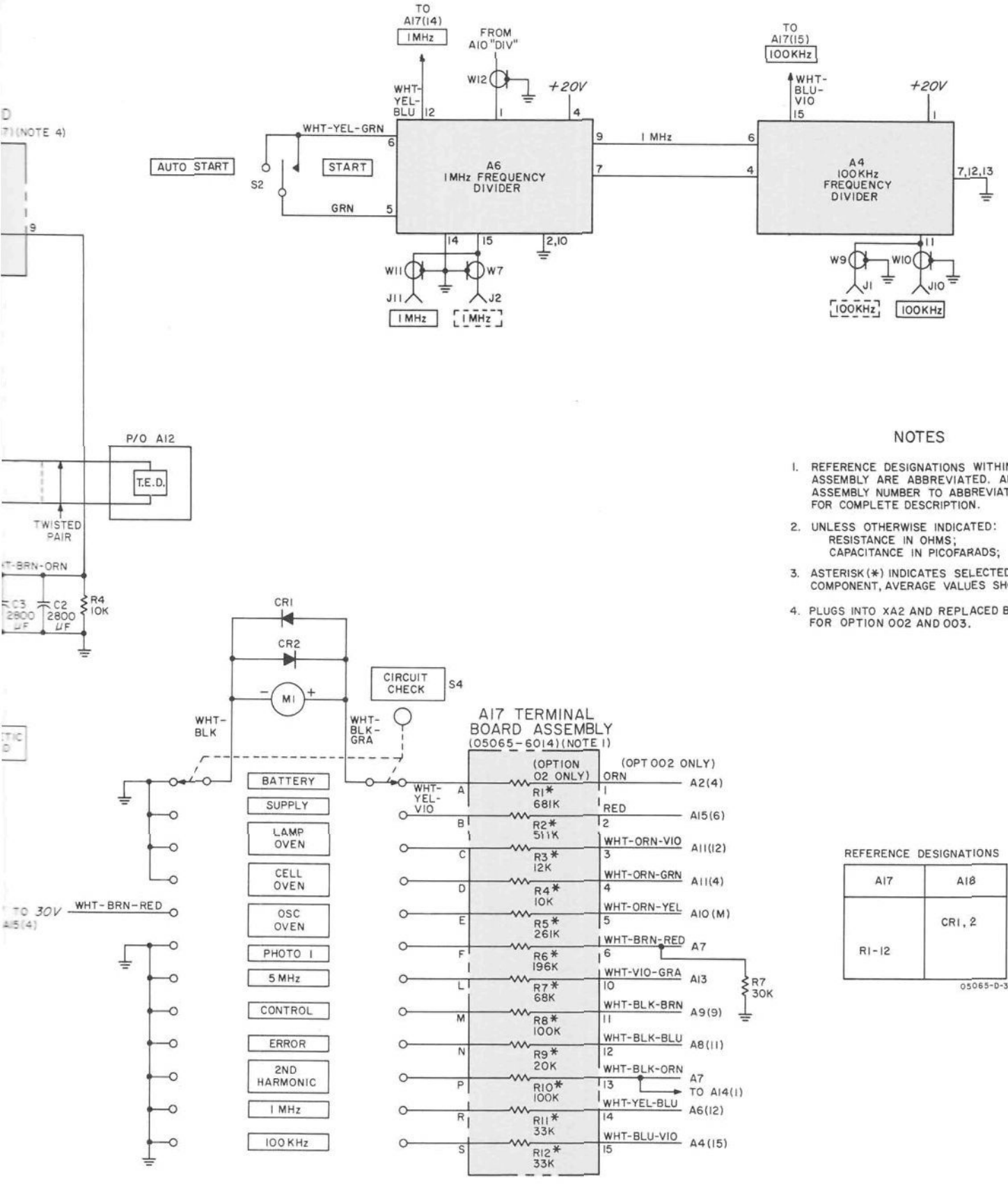

NOTES

1. REFERENCE DESIGNATIONS WITHIN THIS ASSEMBLY ARE ABBREVIATED. ADD ASSEMBLY NUMBER TO ABBREVIATION FOR COMPLETE DESCRIPTION.
2. UNLESS OTHERWISE INDICATED: RESISTANCE IN OHMS; CAPACITANCE IN PICOFARADS;
3. ASTERISK (*) INDICATES SELECTED COMPONENT, AVERAGE VALUES SHOWN
4. PLUGS INTO XA2 AND REPLACED BY A2 FOR OPTION 002 AND 003.

REFERENCE DESIGNATIONS

A17	A18
R1-12	CR1, 2

05065-D-3A

Figure 8-6. Wiring Diagram (Sheet 2 of 3)

Figure 8-7
WIRING DIAGRAM (Sheet 3 of 3)

(See Page 8-9)

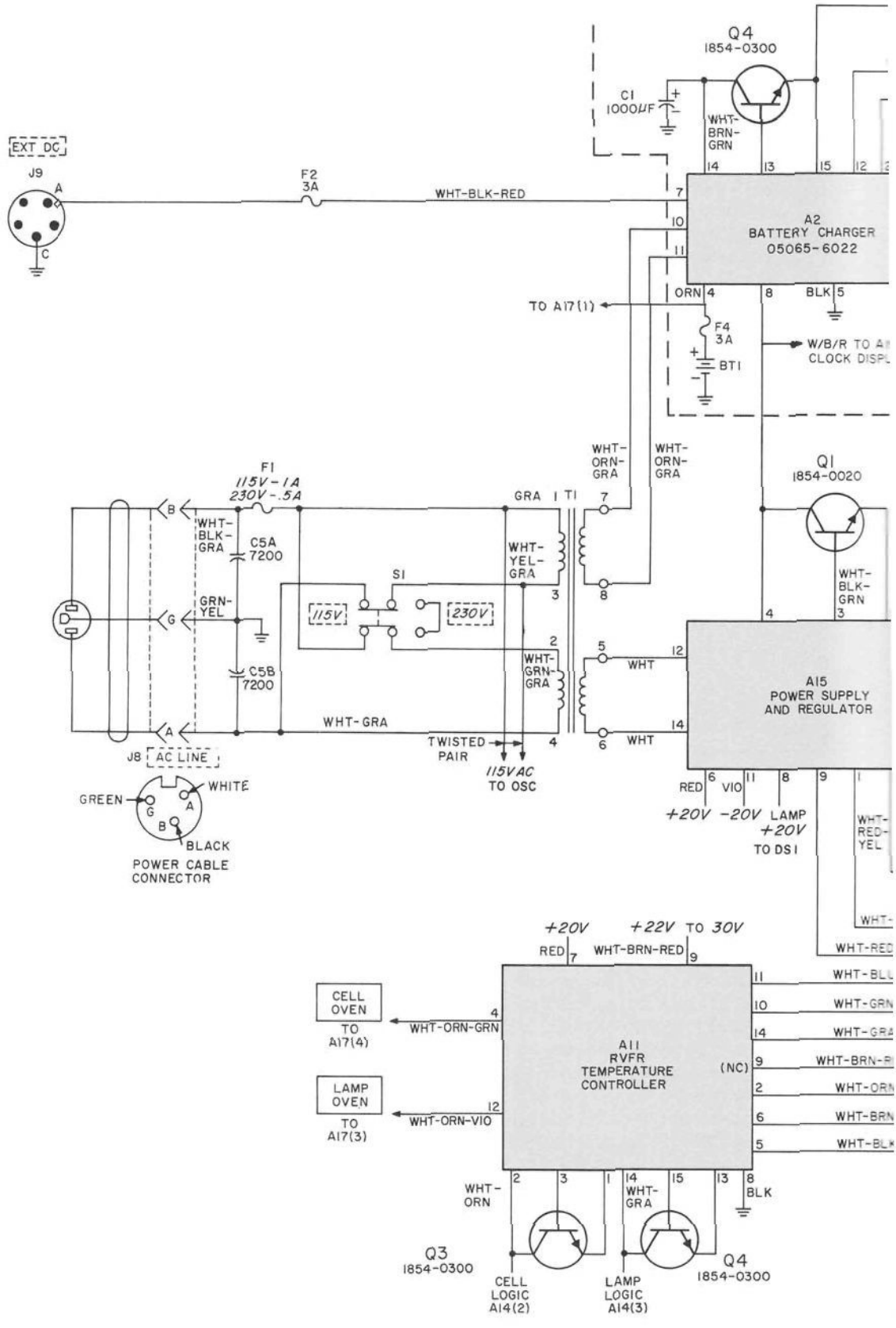
Q4
1854-0300
C1
1000μF
WHT-
BRN-
GRN
EXT DC
J9
A
C
F2
3A
WHT-BLK-RED
A2
BATTERY CHARGER
05065-6022
TO A17(1)
ORN
BLK
F4
3A
BT1
W/B/R TO A
CLOCK DISPL
F1
115V-1A
230V-.5A
WHT-
BLK-
GRA
C5A
7200
GRN-
YEL
C5B
7200
S1
115V
230V
GRA
T1
WHT-
YEL-
GRA
WHT-
GRN-
GRA
WHT-GRA
TWISTED
PAIR
115VAC
TO OSC
WHT-
ORN-
GRA
WHT-
ORN-
GRA
Q1
1854-0020
WHT-
BLK-
GRN
WHT
WHT
A15
POWER SUPPLY
AND REGULATOR
RED
VIO
LAMP
+20V
-20V
+20V
TO DS1
WHT-
RED-
YEL
J8 AC LINE
WHITE
GREEN
BLACK
POWER CABLE
CONNECTOR
+20V
+22V TO 30V
RED
WHT-BRN-RED
WHT-RED
WHT-BLU
WHT-GRN
WHT-GRA
WHT-BRN-R
WHT-ORN
WHT-BRN
WHT-BLK
A11
RVFR
TEMPERATURE
CONTROLLER
(NC)
CELL
OVEN
TO
A17(4)
WHT-ORN-GRN
LAMP
OVEN
TO
A17(3)
WHT-ORN-VIO
WHT-
ORN
WHT-
GRA
BLK
Q3
1854-0300
Q4
1854-0300
CELL
LOGIC
A14(2)
LAMP
LOGIC
A14(3)

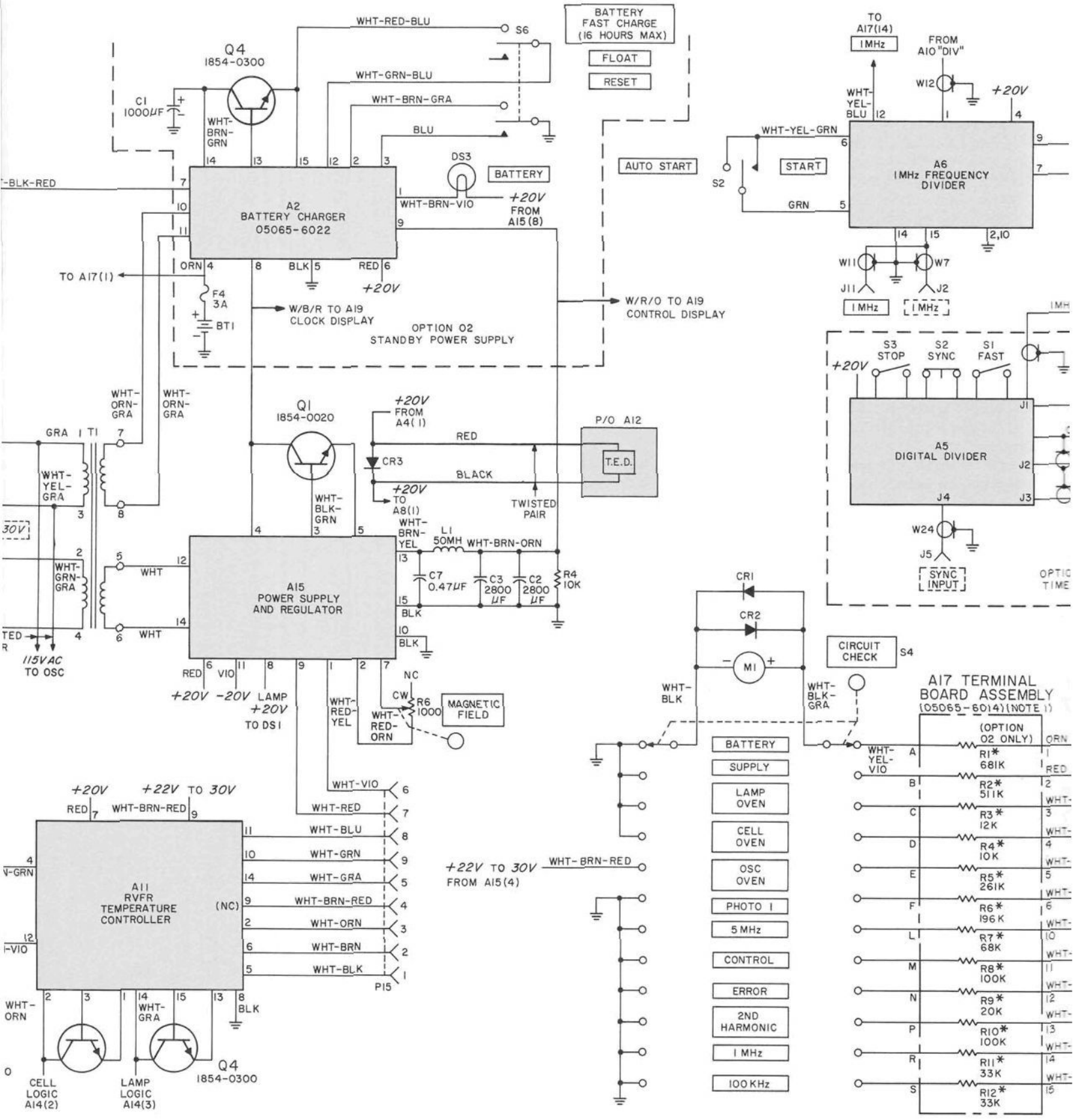
BATTERY FAST CHARGE (16 HOURS MAX)
FLOAT
RESET
AUTO START
START
S2
S6
WHT-RED-BLU
WHT-GRN-BLU
WHT-BRN-GRA
BLU
Q4
1854-0300
C1
1000μF
WHT-BRN-GRN
A2
BATTERY CHARGER
05065-6022
DS3
BATTERY
WHT-BRN-VIO
+20V FROM A15(8)
TO A17(1)
F4
3A
BT1
W/B/R TO A19
CLOCK DISPLAY
OPTION 02
STANDBY POWER SUPPLY
W/R/O TO A19
CONTROL DISPLAY
ORN
BLK
RED
+20V
WHT-ORN-GRA
WHT-ORN-GRA
Q1
1854-0020
+20V FROM A4(1)
RED
BLACK
CR3
P/O A12
T.E.D.
TWISTED PAIR
+20V TO A8(1)
WHT-BLK-GRN
WHT-BRN-YEL
L1
50MH
WHT-BRN-ORN
C7
0.47μF
C3
2800 μF
C2
2800 μF
R4
10K
A15
POWER SUPPLY
AND REGULATOR
WHT-YEL-GRA
WHT-GRN-GRA
WHT
WHT
BLK
BLK
115VAC TO OSC
RED
VIO
LAMP
+20V
-20V
+20V TO DS1
WHT-RED-YEL
WHT-RED-ORN
NC
CW
R6
1000
MAGNETIC FIELD
TO A17(14)
1MHz
FROM A10 "DIV"
W12
+20V
WHT-YEL-BLU
WHT-YEL-GRN
GRN
A6
1MHz FREQUENCY DIVIDER
W11
W7
J11
J2
1MHz
1MHz
S3
STOP
S2
SYNC
S1
FAST
+20V
A5
DIGITAL DIVIDER
J1
J2
J4
J3
W24
J5
SYNC INPUT
CR1
CR2
M1
CIRCUIT CHECK
S4
WHT-BLK
WHT-BLK-GRA
A17 TERMINAL BOARD ASSEMBLY
(05065-6014)(NOTE 1)
(OPTION 02 ONLY)
R1* 681K
R2* 511K
R3* 12K
R4* 10K
R5* 261K
R6* 196K
R7* 68K
R8* 100K
R9* 20K
R10* 100K
R11* 33K
R12* 33K
WHT-YEL-VIO
BATTERY SUPPLY
LAMP OVEN
CELL OVEN
OSC OVEN
PHOTO 1
5 MHz
CONTROL
ERROR
2ND HARMONIC
1 MHz
100 KHz
+22V TO 30V FROM A15(4)
WHT-BRN-RED
+20V
+22V TO 30V
RED
WHT-BRN-RED
A11
RVFR
TEMPERATURE
CONTROLLER
(NC)
WHT-VIO
WHT-RED
WHT-BLU
WHT-GRN
WHT-GRA
WHT-BRN-RED
WHT-ORN
WHT-BRN
WHT-BLK
P15
WHT-ORN
WHT-GRA
BLK
CELL LOGIC A14(2)
LAMP LOGIC A14(3)
Q4
1854-0300

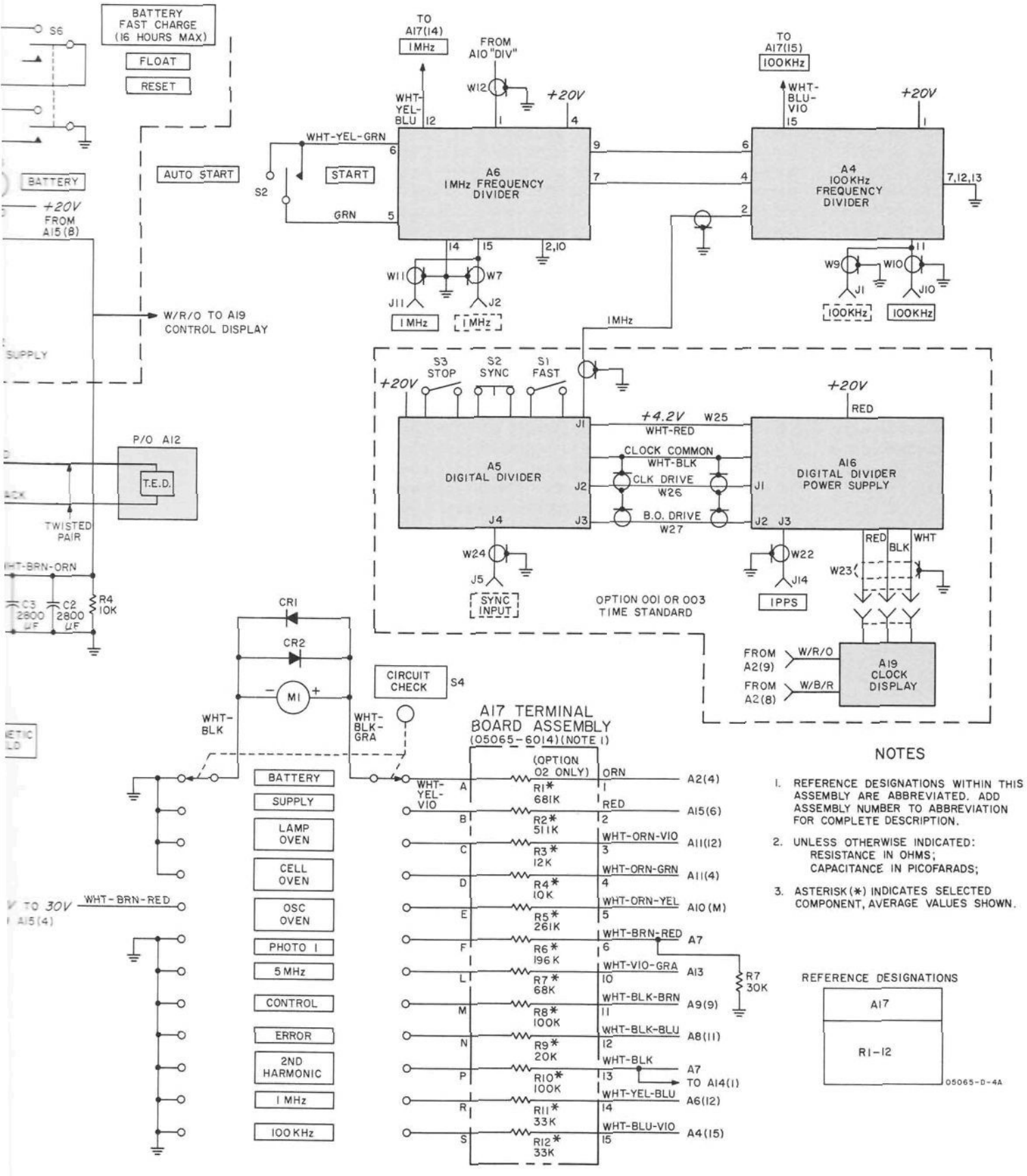

Figure 8-7. Wiring Diagram (Sheet 3 of 3)

UNIT THEORY OF OPERATION

Synthesizer Assembly A1

Synthesizer Assembly A1 produces a 5.315...MHz signal that is mixed with 6840 MHz in a step-recovery diode producing the 6,834,685 Hz microwave field which excites the rubidium vapor cell in a resonant microwave cavity of RVFR Assembly A12. Synthesizer frequency is adjustable by the TIME SCALE thumbwheel switches and the HI/LO slide switch on A1 Assembly. (These controls can be seen with the unit top cover removed.) Output frequencies corresponding to thumbwheel and slide switch settings are in Table 3-6 under OPERATION. The thumbwheel switch setting for A1 operation is listed on the RVFR decal (for access, remove 5065A top cover). The thumbwheel switch setting for UTC (Universal Time) is listed on the front panel door.

The following illustration shows the synthesizing technique for the required 5.315...MHz output. The 5 MHz input is first digitally divided in the preset divider according to the setting of th thumbwheel switches to produce the "n" of the rational fraction m/n which expresses the multiplier ratio for the required synthesizer output. Preset divider output pulses are first sharpened in a blocking oscillator; then applied to a harmonic sampler circuit.

Synthesizer Multiplication Technique

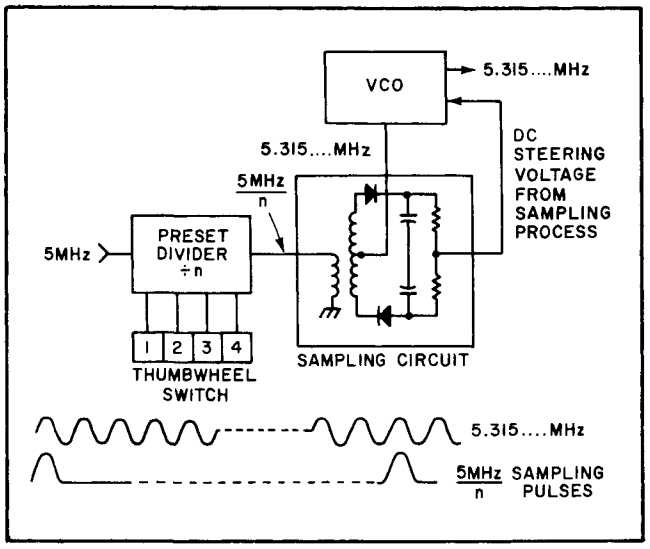

In the harmonic sampler circuit, the 5 MHz/n frequency is compared with the nominal 5.315 MHz frequency of the voltage controlled oscillator. This action produces a dc steering voltage which controls the variable frequency oscillator to synchronize its "m" harmonic with the 5 MHz/n division, thus producing harmonic m of the rational fraction m/n. In this manner, the thumbwheel switches set the desired output frequency. The 5.315...MHz output signal is available as a test signal at the SYNTHESIZER CHECK jack on the front panel.

THE PRESET DIVIDER

The preset divider is made up of four decades giving a total dividing capability of 10,000. With each 10,000 counts applied to the divider input, there will be one output pulse. With the addition of the preset capability this divider can be set to divide by any integer (except 1 through 9, due to preset time). Since the divider can be set to divide by any predetermined integer, the system is considered a divide-by-n preset divider. For example; if the divider were to divide-by-2, an 8 would be preset into the decade before the counting sequence starts, and since an 8 count is already in the decade from the preset, it will take only 2 inputs to get 1 output. Conversely, to divide-by-8, 2 counts are preset into the decade prior to counting.

The preset divider delivers an "H" output to the sample circuit starting at count 9991 and holding thru count 9999. During this time the input gate Q3 closes to prevent 5 MHz pulse train from entering the decades during preset. The preset number is determined by four thumbwheel switches. At the same time that IC4 delivers an "H" output to the sample circuit it supplies a preset pulse to the decades IC1(1), IC2(1), IC5(1), and IC6(1). At the end of the preset period gate Q3 opens and counting resumes until 9991 is obtained again.

Synthesizer Assembly Timing Diagram

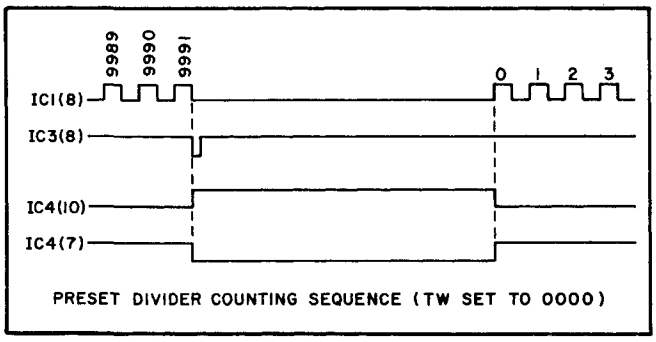

The 5 MHz input signal is shaped by amplifier Q2. The pulses are then applied to decade IC1(8). The decades are connected in series. The sensing gate IC3 detects when count reaches 9991 by sensing nines in IC2, 5, 6, and a one in IC1. The IC3 output then triggers the one-shot IC4. The duration of the one-shot output is approximately 1.8 μsec. During the 1.8 μsecs the decades are preset by the pulse output of IC4(7). At the end of 1.8 sec the decades are preset and ready to resume counting. By sensing nine counts ahead, sufficient time is available to preset the decades to any integer "n", from 1 to 9990.

POWER SUPPLY CIRCUITS

A regulated +5 V supply, obtained from the +20 V supply, is provided for the preset divider circuits. Reference diode CR1 and regulator Q1 maintain a constant +5 V supply to the preset divider.

Figure 8-8
SYNTHESIZER ASSEMBLY A1 BLOCK DIAGRAM
DIGITAL SECTION

(See Page 8-11)

MAINTENANCE

Synthesizer Assembly A1

NORMAL OPERATION

The A1 Synthesizer Assembly processes 5 MHz to produce the required 5.315...MHz. This is added to the A3 Multiplier 60 MHz output and multiplied to 6,834,685 Hz by the step-recovery diode in the RVFR Assembly. To obtain proper Synthesizer output frequencies for UTC and A1 operation, the Synthesizer output is adjustable by the TIME SCALE slide switch and thumbwheel switch located under the top cover of the 5065A. Output frequencies corresponding to all the TIME SCALE settings can be found in Table 3-6 of OPERATION. The thumbwheel switch setting for A1 operation is listed in the RVFR decal. The thumbwheel switch setting for UTC operation is listed on the front panel door.

PERFORMANCE CHECK

If trouble is suspected in the A1 Synthesizer Assembly, the following checks will verify proper or improper operation.

a. Phase Lock Check. Remove top and bottom covers. Connect an oscilloscope to A1TP1 (on bottom of instrument). If the waveform is a random AC signal then the phase-locked oscillator section of the Synthesizer is out of lock. Check thumbwheel and HI/LO switch settings to be sure they are correct. If these switch settings are OK, troubleshoot Synthesizer circuit as described under A1 Troubleshooting. If signal at A1TP1 is correct, check Synthesizer output frequencies versus the thumbwheel settings as described in the following paragraph.

b. Synthesizer Frequency Check. Set up 5065A, frequency counter, and RF voltmeter as shown in Figure 2.

Note thumbwheel and HI/LO switch settings on A1 Synthesizer Assembly. Go to Table 3-6 in OPERATION and determine the frequency corresponding to these settings. The counter should read this frequency ±1 count. The RF voltmeter should indicate 100 mV rms or more. If the counter and RF voltmeter readings are correct, the Synthesizer is working properly at this setting.

A further check of Synthesizer operation at several points over its operating range can be made by setting the switches and reading the frequencies shown in the table below. All frequency readings should be within ±1 count; RF voltmeter should read 100 mV or greater.

Thumbwheel Switch Setting	HI/LO Switch	Frequency (Hz)
9000	HI	5315000.0
9159	HI	5315101.1
9635	HI	5315068.5
8714	HI	5314930.0
9603	HI	5314861.5
9047	HI	5314795.4
8777	HI	5314700.7
8697	LO	5314658.5
9253	LO	5314591.7
8919	LO	5314523.6
7758	LO	5314451.4
9348	LO	5314417.2

NOTE

If the thumbwheel switches are changed from one setting to another or service is performed on A1, allow at least 1 minute of recovery time before attempting to get the continuous operation lamp to light.

TROUBLESHOOTING (See Figure 1).

To check out the Synthesizer circuits, pull off the electrical snap-on connectors and remove four screws which fasten the Synthesizer Assembly to the bottom of the chassis. With the bottom cover removed, turn the unit over for access to the electrical connectors at the chassis bottom. Remove the Synthesizer cover. Check that line power is disconnected. Then lay the Synthesizer Assembly on the bottom of the chassis with some insulation to prevent shorts. Make electrical connections; the snap-on plugs for the shielded leads are labeled with plug number and the pin connectors for the colored-wire connections are labeled for wire color.

Figure 1.

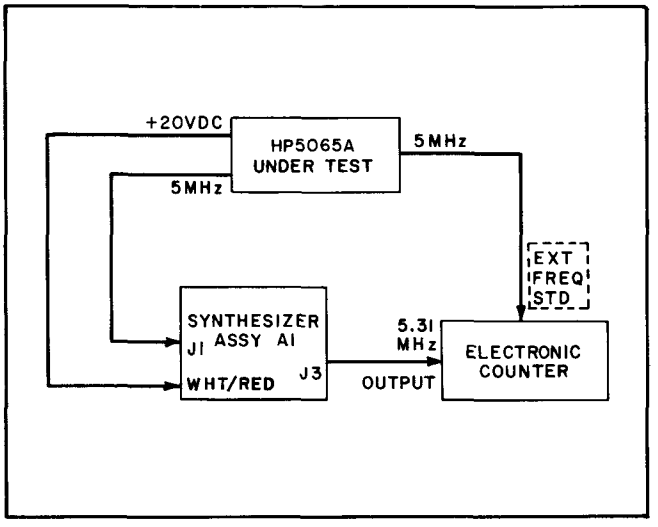

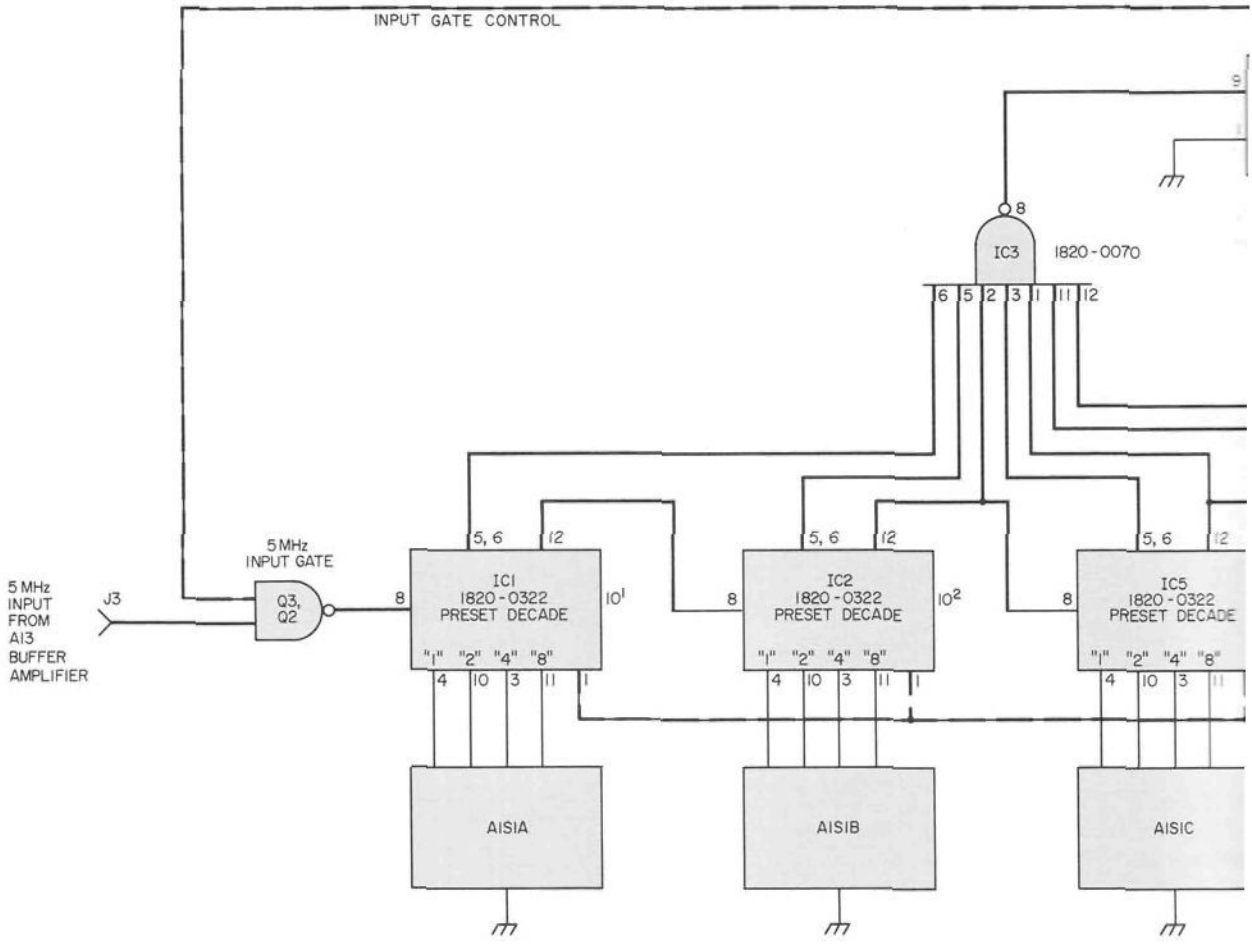
INPUT GATE CONTROL
IC3
1820-0070
5 MHz
INPUT GATE
Q3,
Q2
5 MHz
INPUT
FROM
AI3
BUFFER
AMPLIFIER
J3
IC1
1820-0322
PRESET DECADE
IC2
1820-0322
PRESET DECADE
IC5
1820-0322
PRESET DECADE
"1" "2" "4" "8"
AISIA
AISIB
AISIC

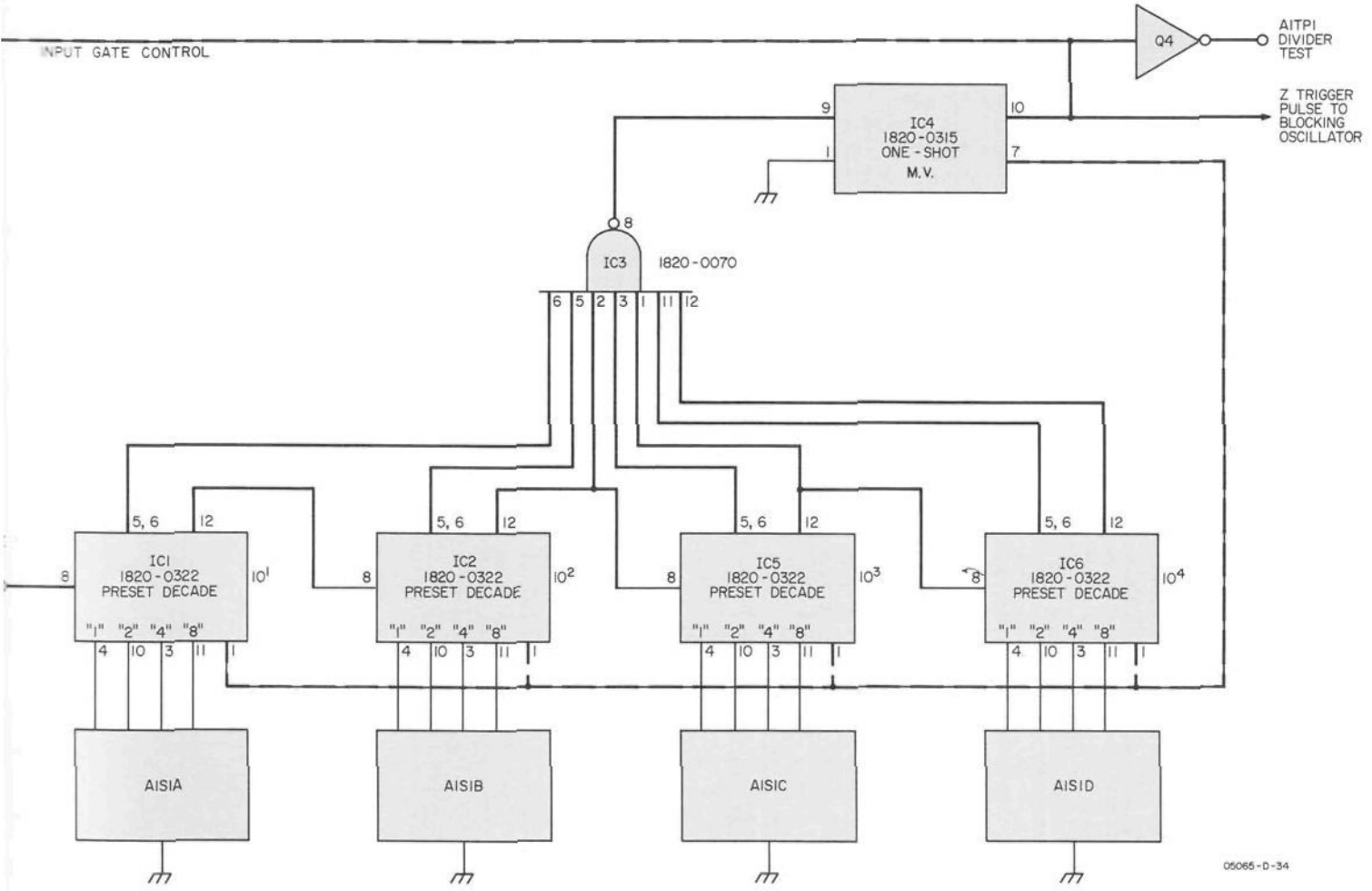

Figure 8-8. Synthesizer Assembly A1 Block Diagram
Digital Section

WARNING

WHEN THE CHASSIS BOTTOM IS EXPOSED, AVOID CONTACT WITH THE LINE TRANSFORMER TERMINALS AT THE REAR OF THE CHASSIS.

Faults may be isolated to the digital section or the phase-locked-oscillator section by using the table.

Connect a Period Counter to A1TP1 and adjust the thumbwheel switch as indicated in the table (Note original setting before changing thumbwheels). The output signal from the digital divider should have the period shown. If the period measurements are correct, set thumbwheel switch back to original setting and troubleshoot phase-locked-oscillator section. If periods are incorrect, then throubleshoot digital section. Note: If Y1 or associated components are suspected of failure see Paragraph entitled "A1Y1, A1L1, A1L2, A1L3, or A1L4 Check and Replacement."

MODULE REPLACEMENT

When Synthesizer Assembly A1 is replaced, the following adjustment is necessary:

a. Set TIME SCALE thumbwheel and HI/LO switches for the same settings as the replaced Synthesizer Assembly.

b. Set instrument to normal operation (CONTINUOUS OPERATION light on).

c. Set front panel OSC FREQ ADJ FINE control to 250.

d. Set CIRCUIT CHECK meter to CONTROL. Observing the meter indication, adjust OSC FREQ ADJ COARSE control for a zero reading.

e. Set FUNCTION switch to LOOP OPEN.

f. Set OSC FREQ ADJ FINE control to 200.

g. Remove instrument top cover. Connect the vertical input of an oscilloscope to A8TP3 and the horizontal input to A8TP2.

h. Adjust oscilloscope for a pattern similar to the following waveform.

Optimized A8TP3 Output

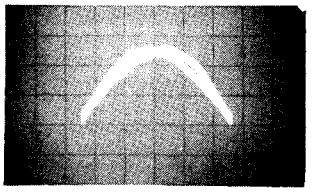

Synthesizer A1TP1 Output Period (vs. Thumbwheel Switch Setting) Table

Time Scale Thumbwheel Setting	Signal Period at A1TP1 (μsec)
0000	2,000.0
0001	1,999.8
0002	1,999.6
0003	1,999.4
0004	1,999.2
0005	1,999.0
0006	1,998.8
0007	1,998.6
0008	1,998.4
0009	1,998.2
0010	1,998.0
0020	1,996.0
0030	1,994.0
0040	1,992.0
0050	1,990.0
0060	1,988.0
0070	1,986.0
0080	1,984.0
0090	1,982.0
0100	1,980.0
0200	1,960.0
0300	1,940.0
0400	1,920.0
0500	1,900.0
0600	1,880.0
0700	1,860.0
0800	1,840.0
0900	1,820.0
1000	1,800.0
2000	1,600.0
3000	1,400.0
4000	1,200.0
5000	1,000.0
6000	800.0
7000	600.0
8000	400.0
9000	200.0

i. Adjust A3R3 fully ccw. The oscilloscope pattern will disappear. Then adjust this control cw and as the pattern appears, adjust cw until the pattern just splits. Then back off slightly to where the pattern is similar to the optimized A8TP2 waveform.

j. Remove oscilloscope connections and replace top covers. Set OSC FREQ ADJ FINE to 250 and set FUNCTION switch to OPER.

k. Press LOGIC RESET pushbutton. CONTINUOUS OPERATION light will come on and stay on.

A1Y1, A1L1, A1L2, A1L3, or A1L4 CHECK AND REPLACEMENT

a. Set FUNCTION switch at LOOP OPEN.

b. Remove synthesizer assembly from instrument (see Troubleshooting). Remove module cover. Disconnect electrical power and turn the unit over. Using a piece of insulation to prevent shorts, reconnect the Synthesizer 5 MHz input to A1J2, the +20 volt lead (wht-red), to the appropriate jack and circuit board ground to chassis ground. Reconnect electrical power.

c. Remove Crystal Y1 and, using a high-impedance voltmeter, check voltage at junction of CR27 and R79. It should be 6 V ± 0.5 volts dc. If it is not, check bias circuitry: R71, R72, CR32, CR30, R73, Q23, CR27, etc. If there are no defective components, adjust R71 for the correct voltage.

d. Disconnect 5 MHz from A1J1 and replace Y1 in its socket.

e. Set TIME SCALE slide switch on synthesizer to LO.

f. Measure Synthesizer frequency at A1J3 using setup shown in the following illustration.

Figure 2.

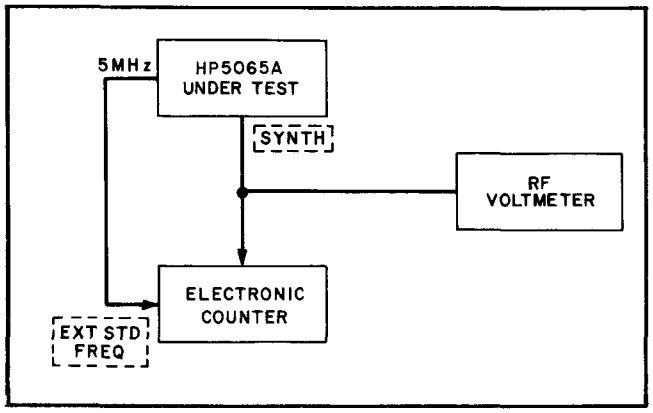

g. If counter indication is greater than 5.314850 MHz or less than 5.314550 MHz, replace A1Y1 before proceeding.

h. Adjust L1 and L2 as necessary for a counter indication of 5.315700 ± 50 Hz.

i. Set TIME SCALE slide switch on Synthesizer to HI.

j. Adjust L4 as necessary for a counter indication of 5.315000 ± 50 Hz.

k. Set TIME SCALE slide switch on Synthesizer to LO. Check that counter indication is 5.314700 ± 50 Hz. If frequency is incorrect, repeat steps g through j.

l. When frequency at HI and LO settings are correct, turn off electrical power, disconnect the synthesizer, replace its cover, and then replace the Synthesizer in the 5065A unit.

m. Reconnect all Synthesizer electrical connections, apply electrical power.

n. Connect the 5065A as shown in the following illustration and check Synthesizer output frequencies as described in the Performance Check for A1 Synthesizer.

PHASE LOCKED VOLTAGE CONTROLLED OSCILLATOR

The phase locked voltage controlled oscillator produces the 5.315...MHz signal applied (through A3 Multiplier) to the harmonic generator/step-recovery diode in A12 Assembly. In A12, 5.315...MHz is mixed with the 6.840...GHz phase-modulated signal (the 114th harmonic of 60 MHz). Oscillator frequency is determined by the bias voltage applied to varactor diode CR27.

The figure below illustrates the sampling process. The 5 MHz/n output pulse of the preset divider is the sampling pulse in the phase lock sampling circuit. The sampled output pulses of this circuit are integrated by the circuit time constant to a dc voltage representing a phase error. This dc voltage acts on CR27 to shift oscillator frequency for a zero dc output which corresponds to a phase-locked, "on frequency" condition.

Sampling Process

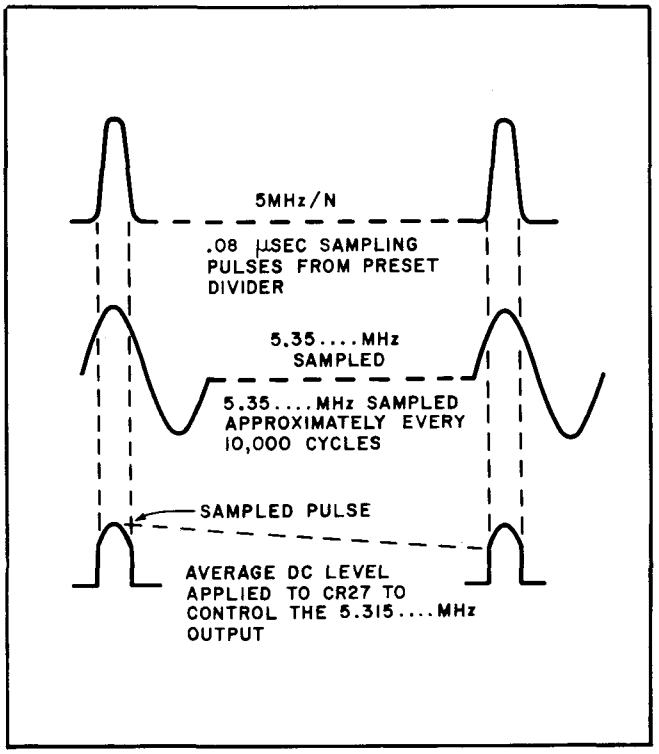

Prior to phase locking, the 5.315...MHz VCO (Q18 and associated components) oscillates at about 5.315...MHz, dependent on dc biasing by R71 and R72. Transistor Q21 buffers the oscillator and drives Q22 and Q26. The 5.315...MHz signal at T2 primary is the input signal for the sampler.

Transitors Q17, Q19, and associated components are a trigger circuit driven by output pulses from preset divider output gate IC5. This trigger circuit drives sampler blocking oscillator Q20. Transformer T1 receives 80 nsec pulses from Q20 at the 5 MHz/n frequency. These pulses "turn on" CR32 and CR33 each time they occur. The 5.315...MHz signal also present in T2 secondary is very close to the "mth" harmonic of 5 MHz/n. This "m" harmonic is sampled at the 5 MHz/n rate, filtered by L7 and C34, and applied to varactor diode CR27 to control oscillator frequency. Therefore, the voltage level at CR27 cathode determines oscillator frequency.

Buffer amplifier Q21 couples the Synthesizer frequency to tuned amplifier Q26, improving signal purity. This output connects to the front-panel SYNTHESIZER CHECK jack for test purposes and to A3 Multiplier Assembly for adding to the Multiplier 60 MHz signal.

The 5.315...MHz VCO phase lock range is kept narrow to prevent phase locking to incorrect harmonics. To accommodate the dynamic range required to complete coverage of all UTC offset frequencies, the VCO has two overlapping frequency ranges, selected by HI/LO switch A1S2. Table 3-6 indicates the proper setting for synthesizer frequencies.

Oscillator output amplitude is stabilized by the rectified output from diodes CR34 and CR35. This output if filtered by C38 and C39. This AGC dc feedback connects to oscillator Q18 base.

Transistor Q27 and associated components provide a Synthesizer failure signal to Logic Assembly A14. During normal Synthesizer operation, Q27 is biased off and no output signal results. If the Synthesizer loses phase lock, Q23 input becomes a random ac signal which can be observed at TP1. This signal is coupled through C37 and Q24 base, amplified in Q24, Q25, and rectified by CR36 and CR37. This rectified signal forward biases CR38 and turns Q27 on to send a signal to Logic Assembly A14. This turns off the CONTINUOUS OPERATION light. If blocking oscillator Q20 fails, a signal through CR39 will turn on Q27 and apply the same failure signal to the logic circuit.

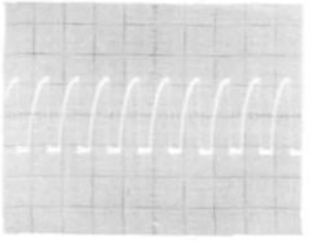

❶ 2 V/cm
.2 μsec/cm
dc coupled

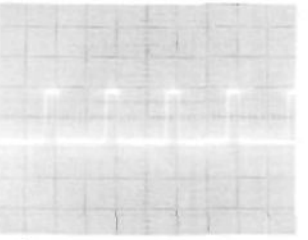

❷ 2 V/cm
1 μsec/cm
dc coupled

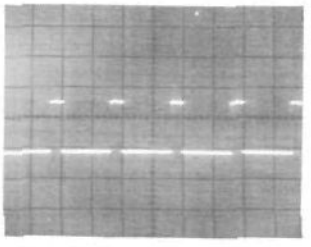

❸ 2 V/cm
10 μsec/cm
dc coupled

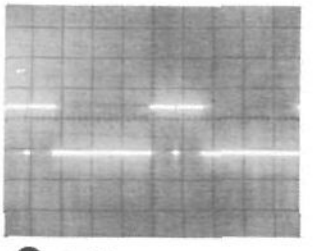

❹ 2 V/cm
50 μsec/cm
dc coupled

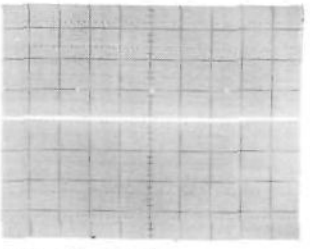

❺ ❻ 2 V/cm
.1 msec/cm
dc coupled

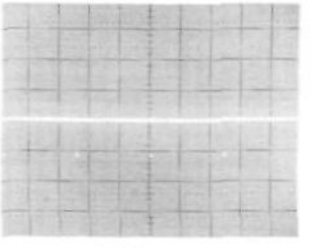

❼ ❽ 5 V/cm
.1 msec/cm
dc coupled

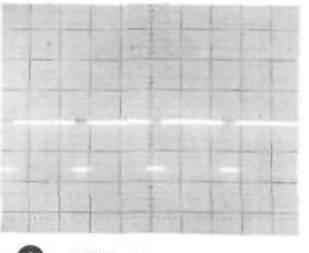

❾ .2 V/cm
.1 msec/cm
dc coupled

Figure 8-9
SYNTHESIZER ASSEMBLY A1 DIGITAL SECTION
(Sheet 1 of 2)

(See Page 8-17)

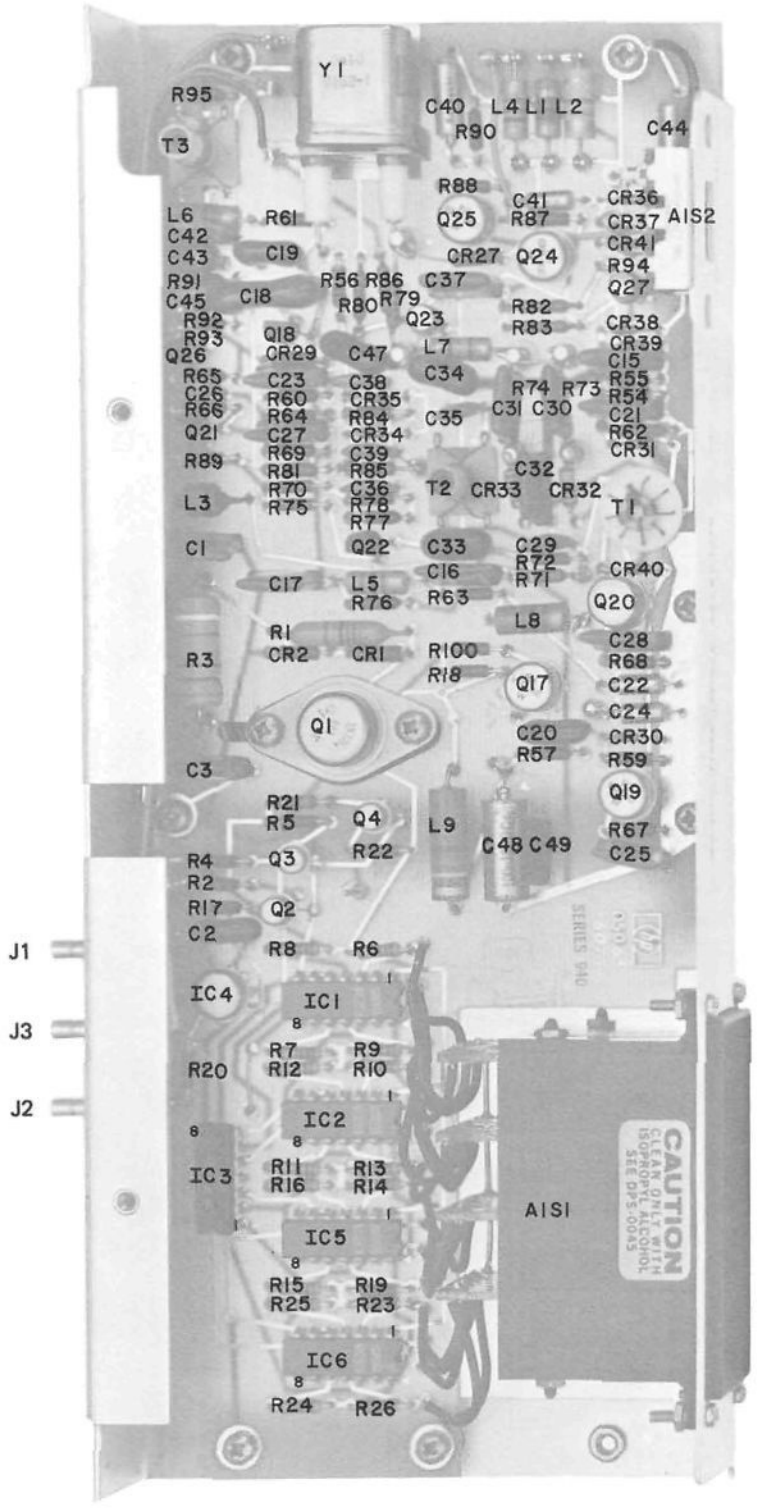
Y1
R95
T3
C40 L4 L1 L2
R90
C44
R88
C41
CR36
L6
R61
Q25
R87
CR37
AIS2
C42
C43
C19
CR27
Q24
CR41
R94
R91
R56 R86
C37
Q27
C45
C18
R80 R79
Q23
R82
R92
R83
CR38
R93
Q18
L7
CR39
Q26
CR29
C47
C15
R65
C23
C38
C34
R74 R73
R55
C26
R60
CR35
C31 C30
R54
R66
R64
R84
C35
C21
Q21
C27
CR34
R62
R89
R69
C39
CR31
R81
R85
C32
L3
R70
C36
T2
CR33
CR32
T1
R75
R78
R77
C1
Q22
C33
C29
R72
C16
R71
CR40
C17
L5
R76
R63
Q20
L8
R1
C28
R3
CR2
CR1
R100
R68
R18
Q17
C22
Q1
C24
C20
CR30
R57
R59
C3
Q19
R21
R5
Q4
L9
R67
C48 C49
C25
R4
Q3
R22
R2
R17
Q2
C2
J1
R8
R6
IC4
IC1
J3
R7
R9
R20
R12
R10
J2
IC2
IC3
R11
R13
R16
R14
AIS1
IC5
R15
R19
R25
R23
IC6
R24
R26
CAUTION
CLEAN ONLY WITH
ISOPROPYL ALCOHOL
SEE DPS-0043

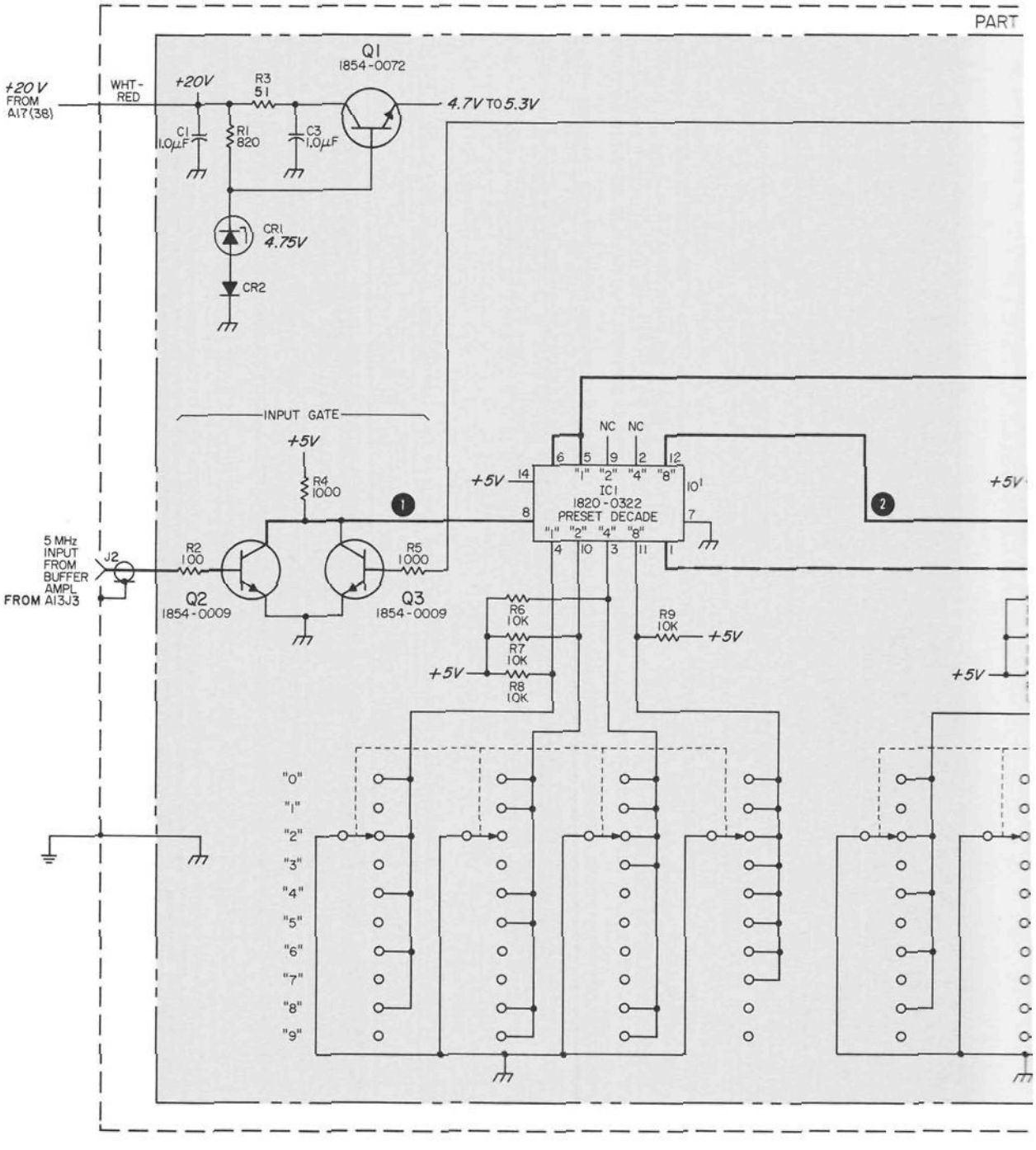

PART
+20 V FROM A17(38)
WHT-RED
+20V
R3 51
Q1 1854-0072
4.7V TO 5.3V
C1 1.0μF
R1 820
C3 1.0μF
CR1 4.75V
CR2
INPUT GATE
+5V
R4 1000
5 MHz INPUT FROM BUFFER AMPL FROM A13J3
J2
R2 100
Q2 1854-0009
R5 1000
Q3 1854-0009
NC NC
IC1 1820-0322 PRESET DECADE
R6 10K
R7 10K
R8 10K
R9 10K
"0"
"1"
"2"
"3"
"4"
"5"
"6"
"7"
"8"
"9"

PART OF A1 SYNTHESIZER ASSEMBLY (05065-6076) (NOTE 1) SERIES 1908

PART OF A1A1 SYNTHESIZER P.C. BOARD ASSEMBLY (05065-6073) SERIES 1908

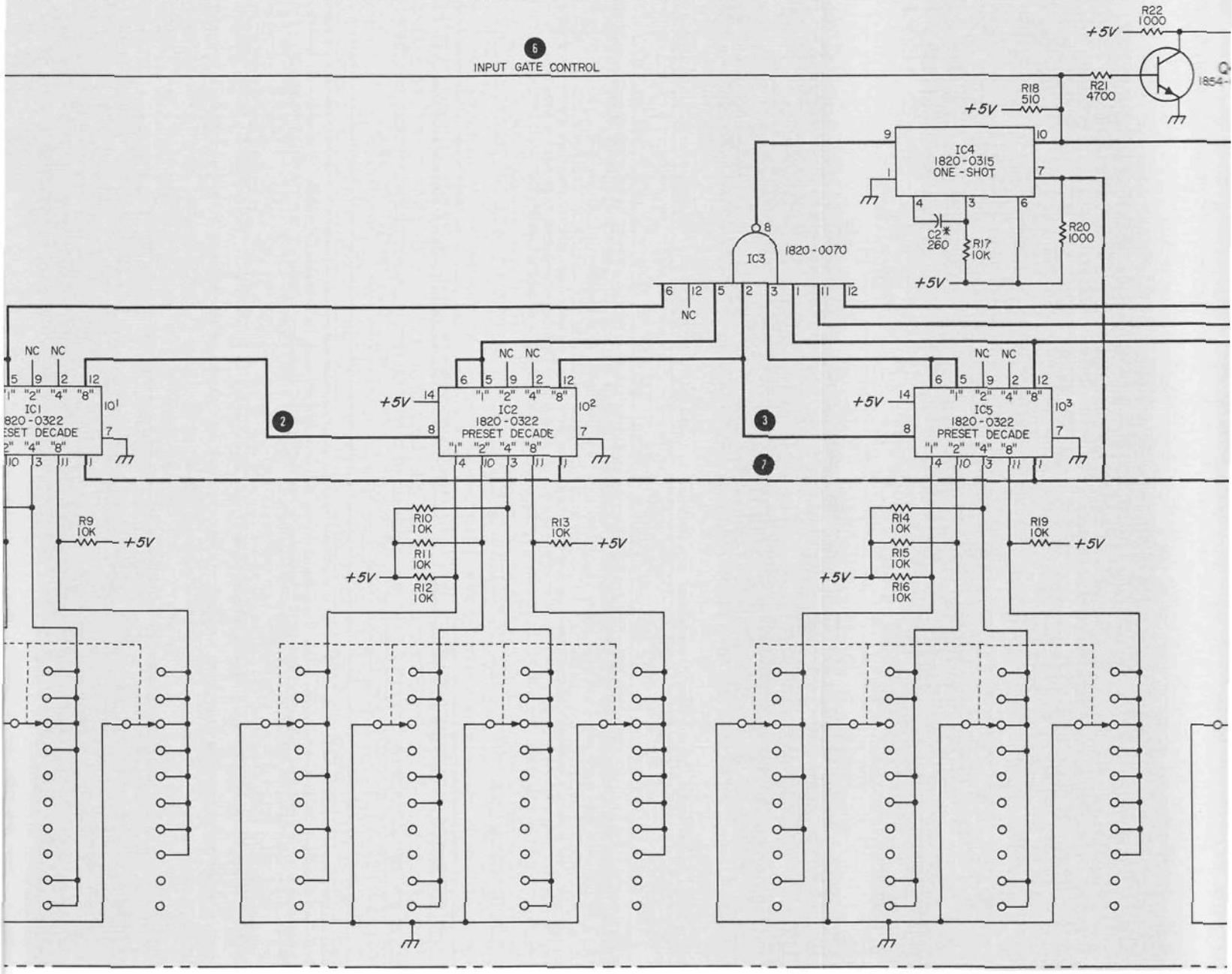

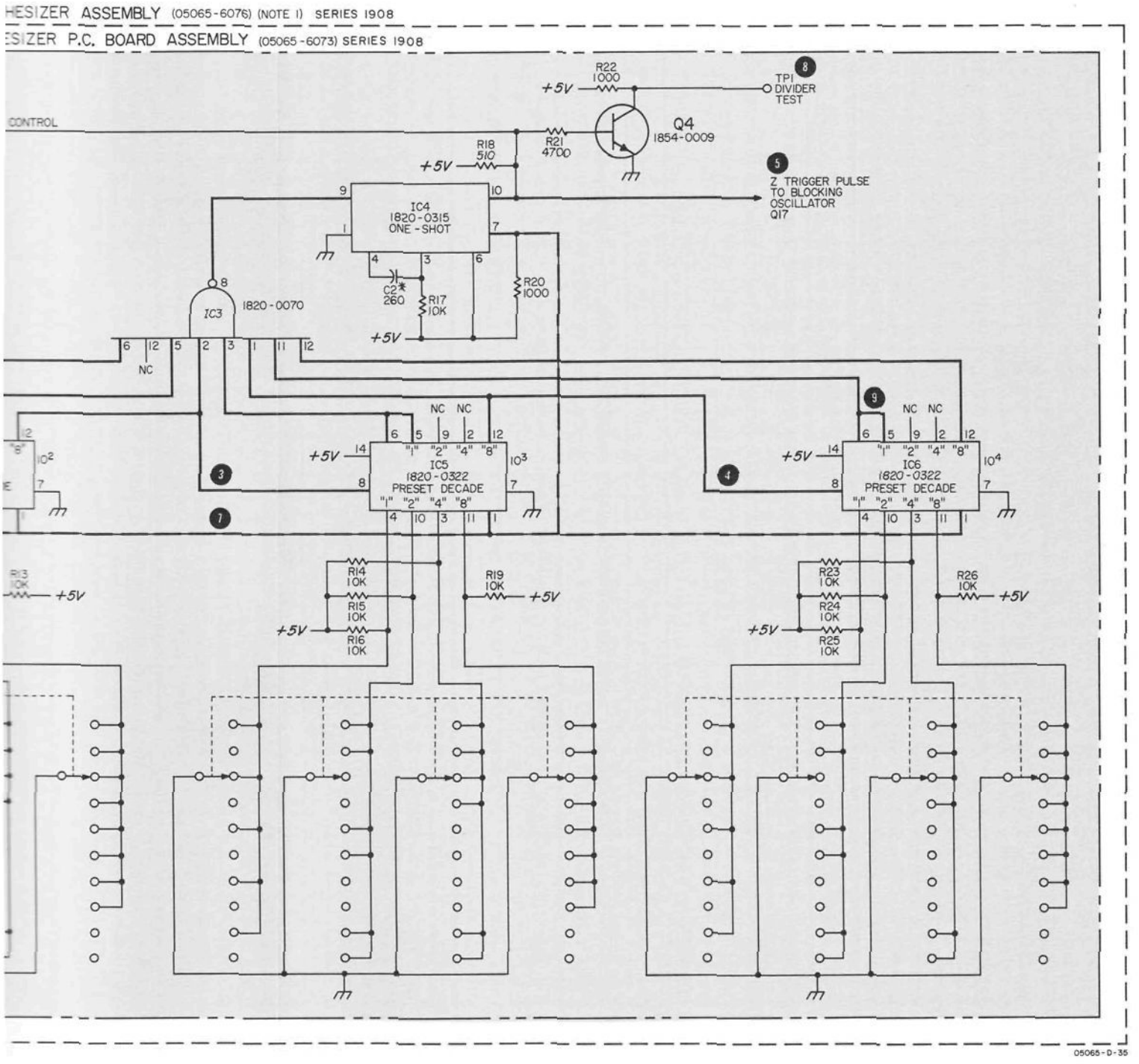

Figure 8-9. Synthesizer Assembly A1 Digital Section
(Sheet 1 of 2)

Figure 8-9
SYNTHESIZER ASSEMBLY A1 PHASE-LOCKED OSCILLATOR SECTION (Sheet 2 of 2)

(See Page 8-19)

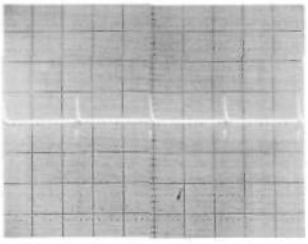

⑩ .1 V/cm
.1 msec/cm
dc coupled

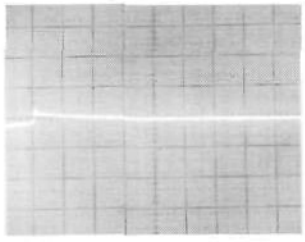

⑩ .2 V/cm
1 μsec/cm
dc coupled
(Puse width)

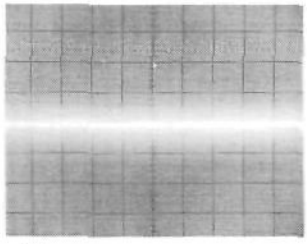

⑪ 1 V/cm
50 μsec/cm
ac coupled

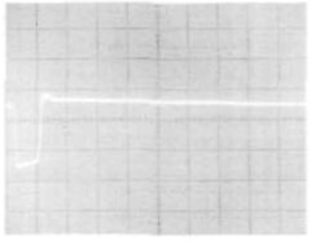

⑪ 1 V/cm
.1 μsec/cm
ac coupled
(Pulse width)

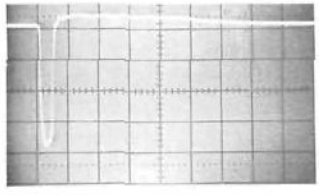

⑫
.5 V/cm
.2 msec/cm
ac coupled

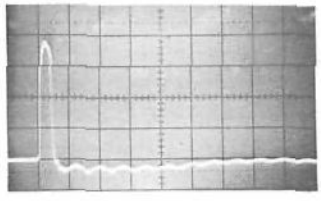

⑬
.2 V/cm
.1 μsec/cm
dc coupled

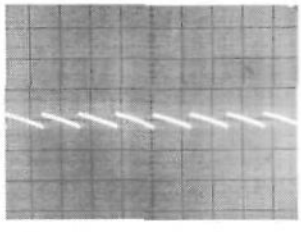

⑭ .05 V/cm
.2 msec/cm
dc coupled

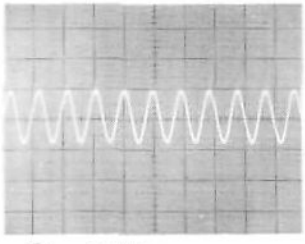

⑮ .05 V/cm
.2 μsec/cm
ac coupled

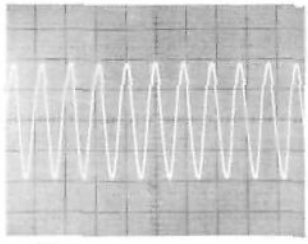

⑯
1 V/cm
.2 msec/cm
ac coupled

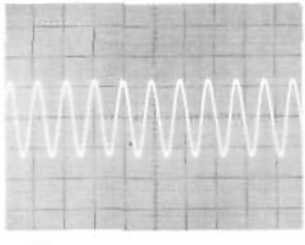

⑰ .05 V/cm
.2 μsec/cm
ac coupled

PART OF AI SYNTHESIZER ASSE

PART OF AIAI SYNTHESIZER P.C. BO

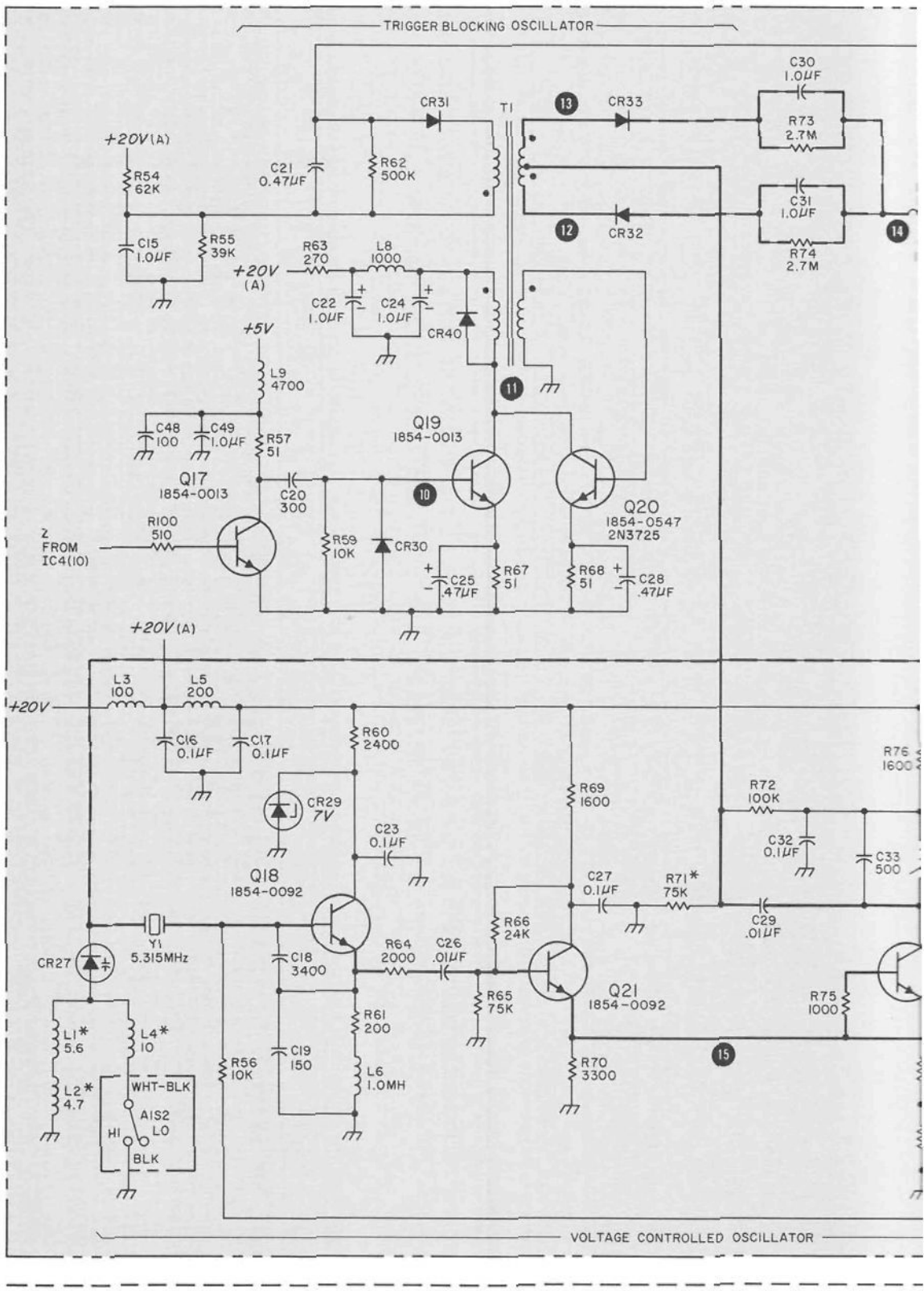

PART OF A1 SYNTHESIZER ASSEMBLY (05065-6076) (NOTE 1) SERIES 1908

PART OF A1A1 SYNTHESIZER P.C. BOARD ASSEMBLY (05065-6073) SERIES 1908

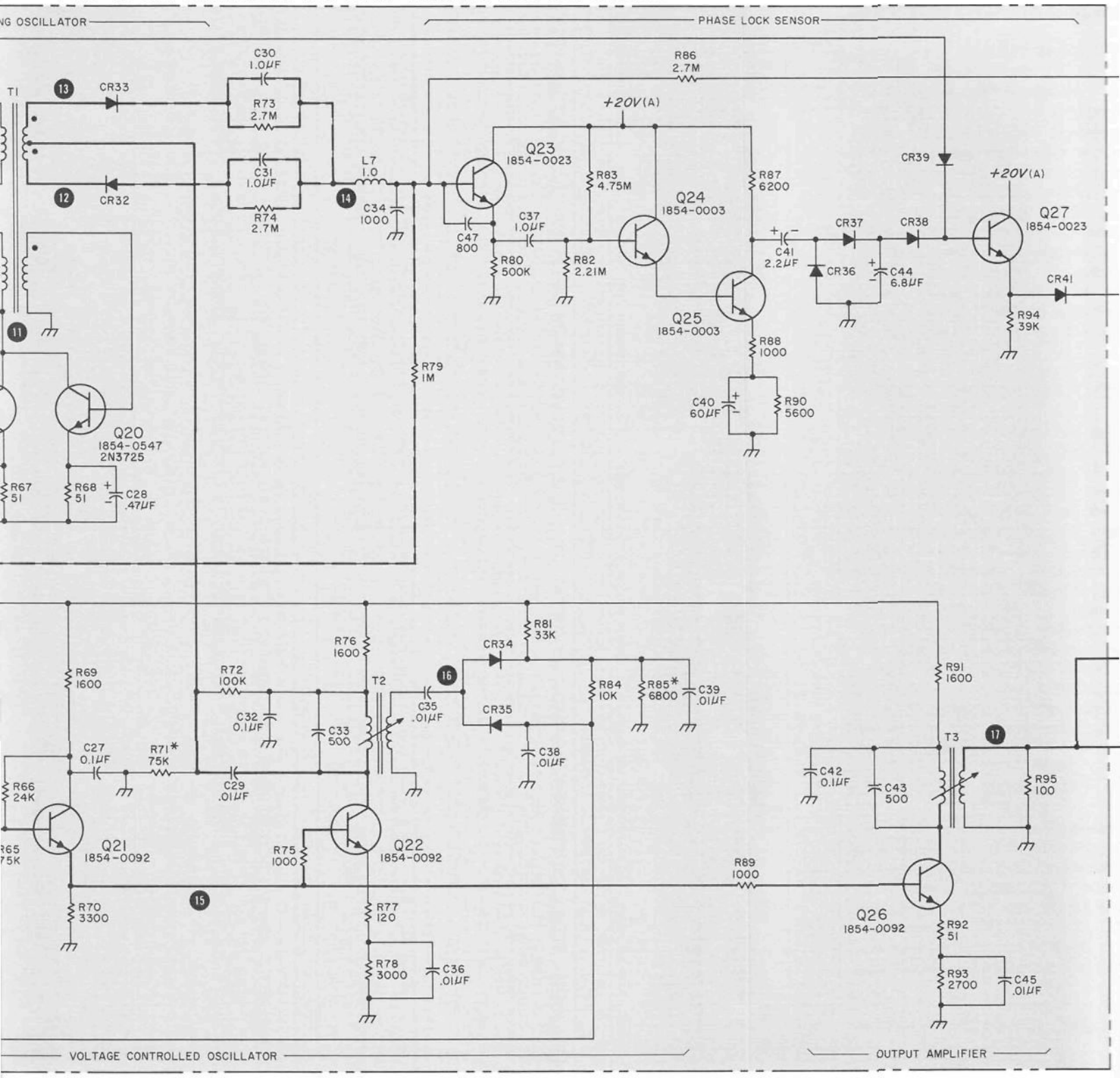

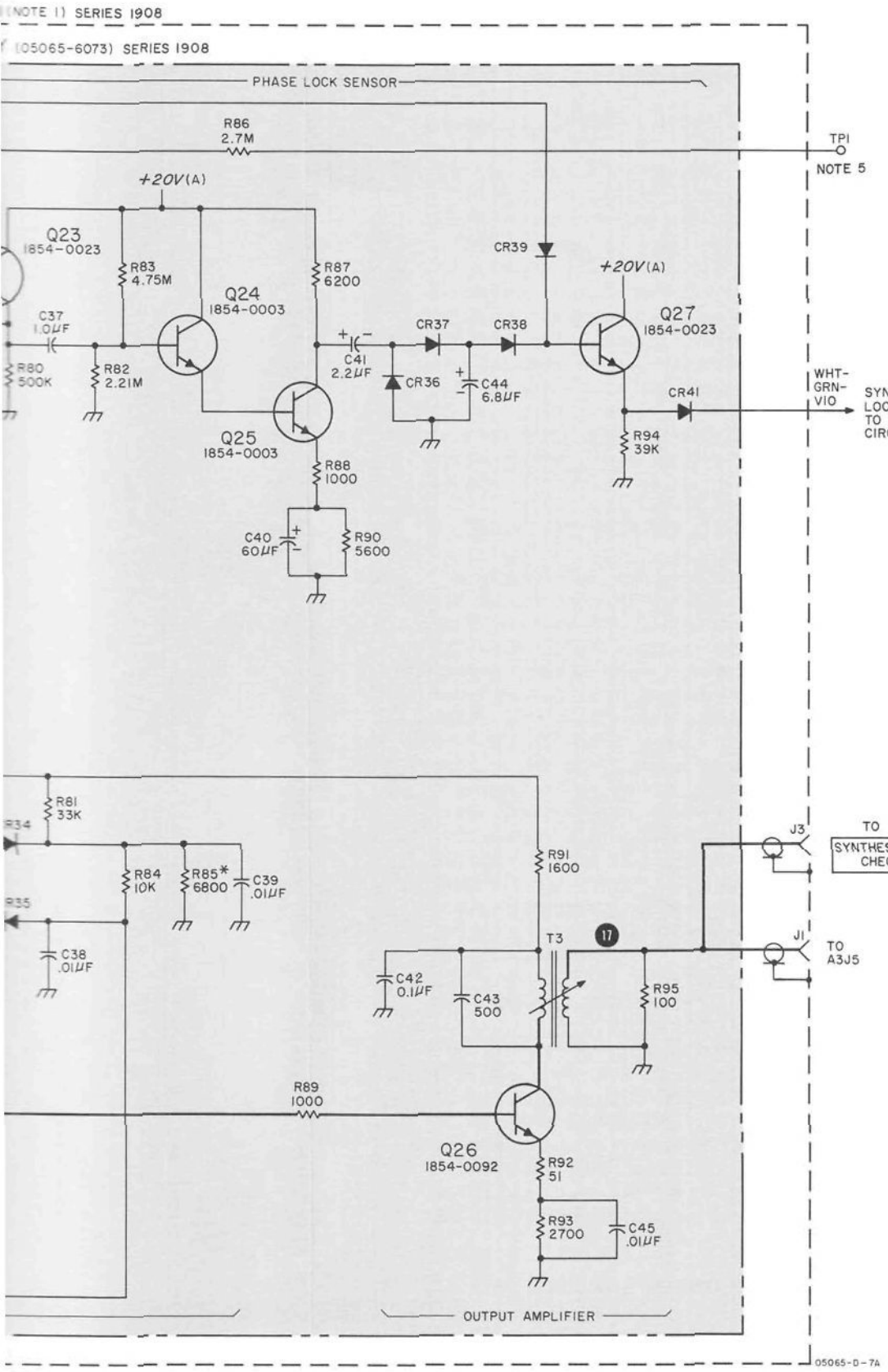

NOTES

1. REFERENCE DESIGNATIONS WITHIN THIS ASSEMBLY ARE ABBREVIATED. ADD ASSEMBLY NUMBER TO ABBREVIATION FOR COMPLETE DESCRIPTION.
2. UNLESS OTHERWISE INDICATED: RESISTANCE IN OHMS; CAPACITANCE IN PICOFARADS; INDUCTANCE IN MICROHENRIES
3. ASTERISK (*) INDICATES SELECTED COMPONENT, AVERAGE VALUES SHOWN.
4. SEE THUMBWHEEL SWITCH PAGE 8-10
5. TP1 BECOMES A RANDOM AC SIGNAL WHEN SYNTHESIZER IS OUT OF LOCK.

REFERENCE DESIGNATIONS

NO PREFIX	A1	A1A1
		C1-3,15-45, 47-49 CR1,2,27, 29-39,41 IC1-6
	J1-3	
		L1-9 Q1-4,17-27 R1-26, 54-57, 59-95,100
	S1,2	
		T1-3
TP1		TP1 Y1

Figure 8-9. Synthesizer Assembly A1 Phase-Locked Oscillator Section (Sheet 2 of 2)

A2 BATTERY CHARGER ASSEMBLY THEORY

CHARGING CURRENT REGULATOR CIRCUIT

The charging current regulator is made up of A2CR7, A2Q5, Q6, and Q4. Ac voltage from T1 is applied to A2(10, 11) and rectified by bridge network A2CR1 to A2CR4. Voltage regulation occurs through A2Q5 and Q4. A2Q6 monitors battery charging current by sensing the voltage drop across A2R12 and A2R13. Increases in battery charging current are sensed by A2Q6 which conducts and increases voltage drop across A2R7. The decrease in bias at A2Q5 base regulates the charging current from Q4 to within limits set by A2CR7. In the FLOAT position of S6, the battery receives a trickle-charge. When S6 is in FAST position A2R12 is bypassed which increases the charging current to the battery.

BATTERY LAMP CONTROL CIRCUIT

The battery lamp control circuit is comprised of A2Q1, Q2, Q3, Q4, and A2CR6, CR8. In the FLOAT position, BATTERY lamp DS3 is off. Multivibrator A2Q1, Q3 is off and A2Q2 is biased off. When the ac line is interrupted, a voltage signal from the Battery Cut-in Circuit turns on A2Q7 and Q2, and triggers the multivibrator A2Q1, Q3. This causes the BATTERY lamp to flash on and off. Operating voltage comes from the battery through Q14 to the Power Supply and Regulator A15. The lamp will continue to flash until the ac power is restored and RESET is pressed. In RESET position CR8 gate element is grounded turning CR8, Q2, the multivibrator circuit, and the lamp off. In the FAST CHARGE position S6 shorts out A2R12 and increases the battery charging current. Another section of S6 also provides a ground for the battery lamp through A2R6 to turn the lamp on continously.

BATTERY CUT-IN CIRCUIT

The battery cut-in circuit is made up of A2CR9, Q8, Q9, Q12, and Q15. The dc voltage from the instrument power supply is monitored through CR9. As long as the dc voltage is present Q8 conducts and Q9 is cut off. When ac power is interrupted, Q8 is turned off and Q9 is turned on. This turns Q12, Q15, and Q13 on. This action also turns on the dc power switch Q14 and sustains instrument operation from the battery.

BATTERY DISCONNECT CIRCUIT

The Battery Disconnect Circuit consists of A2CR11, Q10, Q11, K1, and CR15. During battery operation, battery voltage monitored through CR11 keeps Q10 turned on. When the battery voltage decreases to approximately 23 volts, Q10 turns off and causes Q11 to turn on. This in turn energizes differential relay K1, and disconnects the battery. When ac power is reapplied, Q10 again conducts. This reverses the polarity of A2K1 and reconnects the battery.

OPERATIONAL CHECK

a. Observe the CIRCUIT CHECK BATTERY position; indication should be between 30 and 50.

b. Disconnect ac cord from ac line; BATTERY lamp should flash on and off. RESET has no effect.

c. Connect ac power cord to ac line. RESET BATTERY switch; BATTERY lamp should stop flashing. Set BATTERY switch to FAST CHARGE; BATTERY lamp should light. Return switch to FLOAT position and BATTERY lamp will go out. This completes the check.

TROUBLESHOOTING

NOTE

These tests check individual circuits on Battery Charger Assembly A2. If failure is indicated in a circuit, repair the circuit and perform battery charger operational check.

a. Charging Current Regulator.

1. Charging current to the battery should be:

FLOAT: 12 to 34 mA (see Paragraph 5-35)
FAST CHARGE: 90 to 150 mA (see Paragraph 5-35)

2. If the current differs substantially check A2CR1 to CR4 for power rectification and CR7 for indicated voltage. Check Q4, A2Q5, A2Q6 operation. Check S6.

b. Battery Lamp Control.

1. If the lamp does not flash when ac is interrupted, check Q1, Q3 multivibrator, and check that collector of A2Q2 is below 1 volt.

2. If the lamp does not light with switch S6 in FAST CHARGE check S6 and DS3 or R6.

3. If Battery lamp won't light, check lamp DS3 and S6. If it won't go out, manually ground the + gate element of CR8. If the lamp goes out, check S6, otherwise, check CR8, Q2, Q1, and Q3.

c. Battery Cut-in Circuit.

1. Disconnect ac power cord from ac power source. Instrument should switch to Battery Operation and DS3 should flash on and off. If this does not occur, check that collector A2Q12 increases from approximately 10 volts to 20 volts. If not check Zener voltages of A2CR9 and replace if it is outside the 10 to 12 volt range. Replace A2Q8, 9 and 12 successively in that order.

Figure 8-10
A2 BATTERY CHARGE ASSEMBLY (OTPION 002 AND 003)

(See Page 8-21)

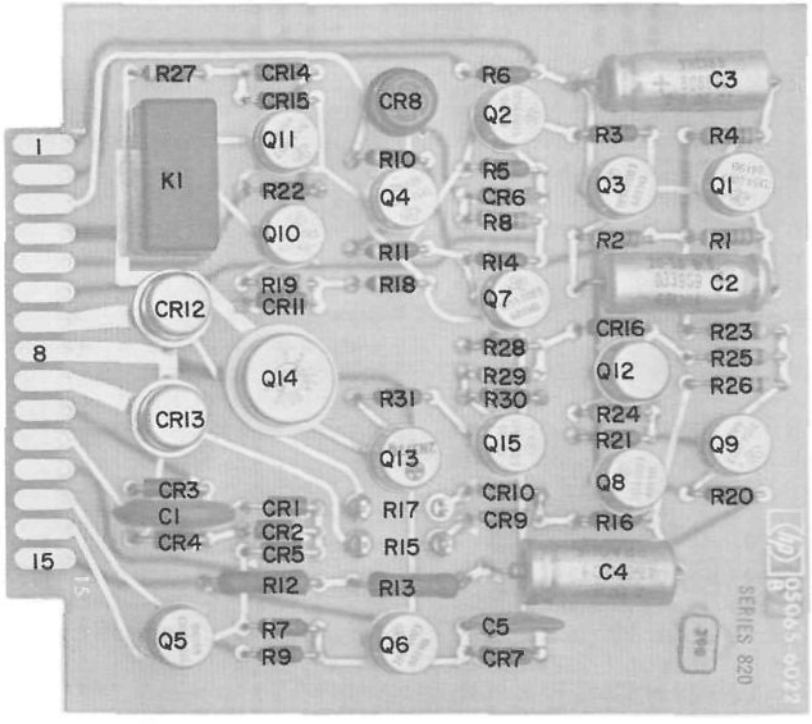
R27
CR14
CR15
CR8
R6
C3
Q11
Q2
R3
R4
1
K1
R10
R5
Q3
Q1
R22
Q4
CR6
Q10
R8
R2
R1
R11
R14
R19
R18
Q7
C2
CR12
CR11
CR16
R23
8
R28
R25
Q14
Q12
R29
R26
R31
R30
CR13
R24
R21
Q9
Q15
Q13
Q8
CR3
CR10
R20
C1
CR1
R17
CR9
R16
CR4
CR2
R15
CR5
15
C4
R12
R13
Q5
R7
Q6
C5
R9
CR7
SERIES 820

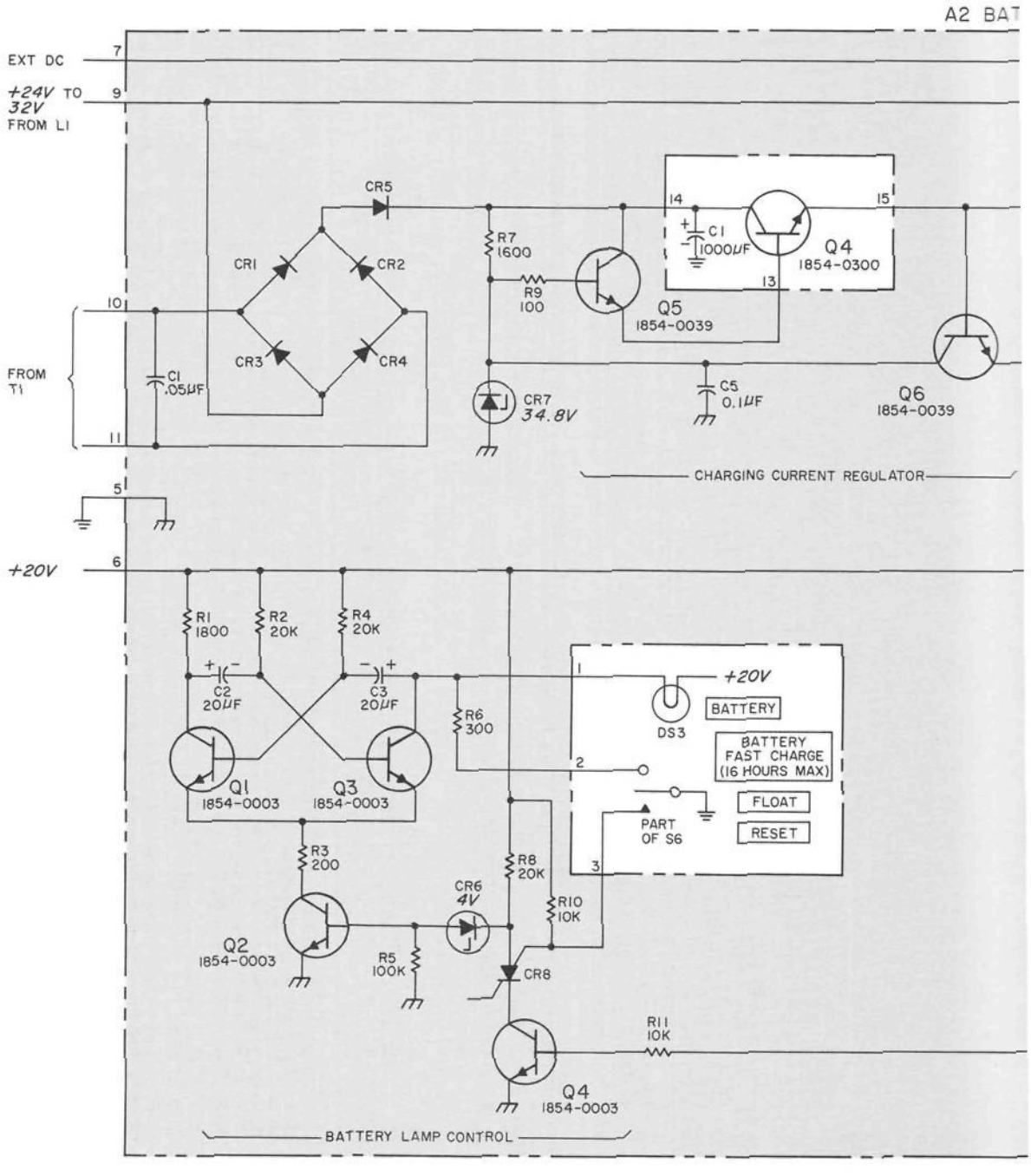

NOTES

1. REFERENCE DESIGNATIONS WITHIN THIS ASSEMBLY ARE ABBREVIATED. ADD ASSEMBLY NUMBER TO ABBREVIATION FOR COMPLETE DESCRIPTION.
2. UNLESS OTHERWISE INDICATED:
   RESISTANCE IN OHMS;
   CAPACITANCE IN PICOFARADS;
3. ASTERISK (*) INDICATES SELECTED COMPONENT, AVERAGE VALUES SHOWN

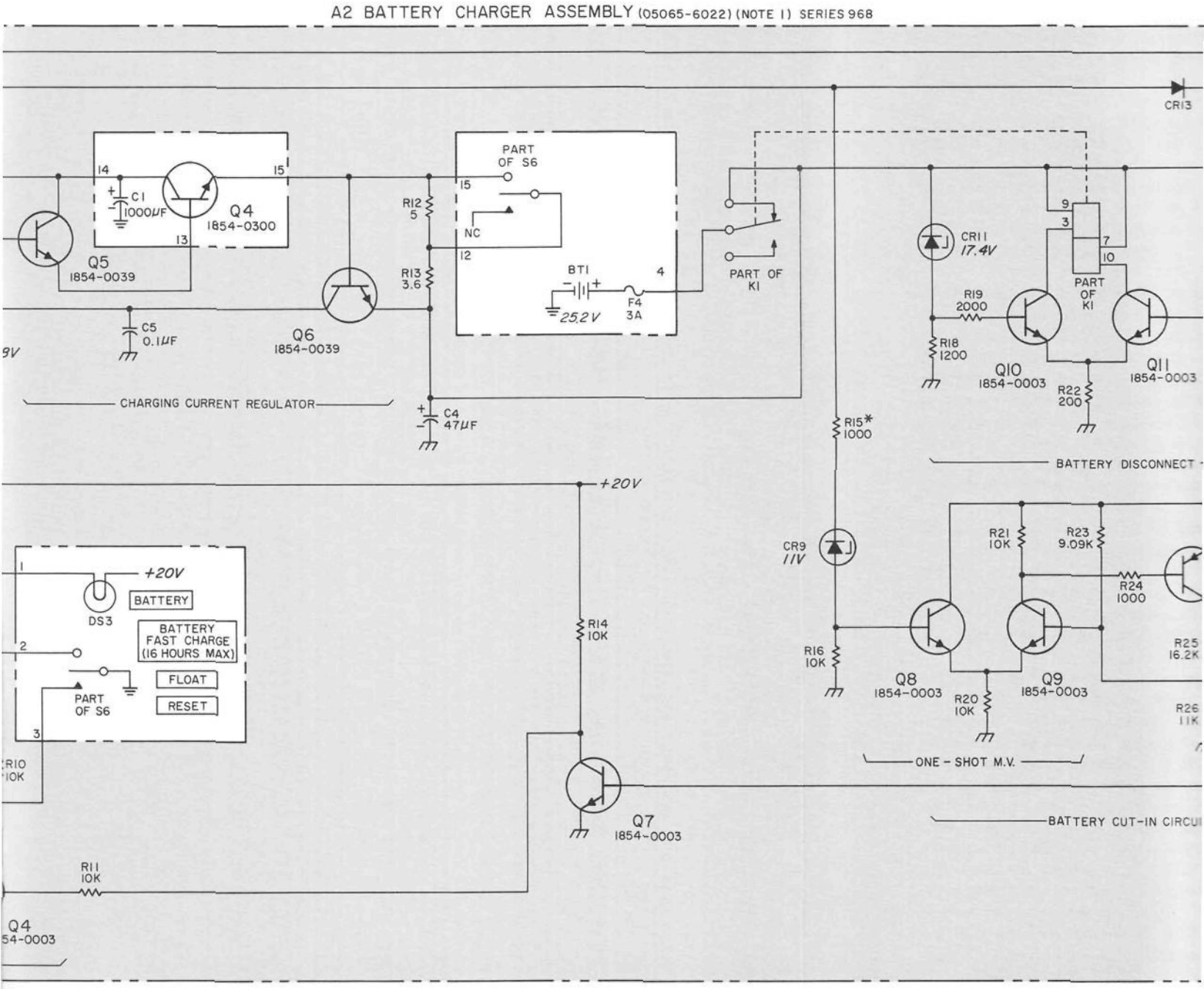

REFERENCE DESIGNATIONS

NO PREFIX	A2
BT1	
C4	C1-5 CR1-16
DS3	
F4	
Q4	K1 Q1-15 R1-31
S6	S1

DELETED:
CR12, 14
CR10, R17

Figure 8-10.

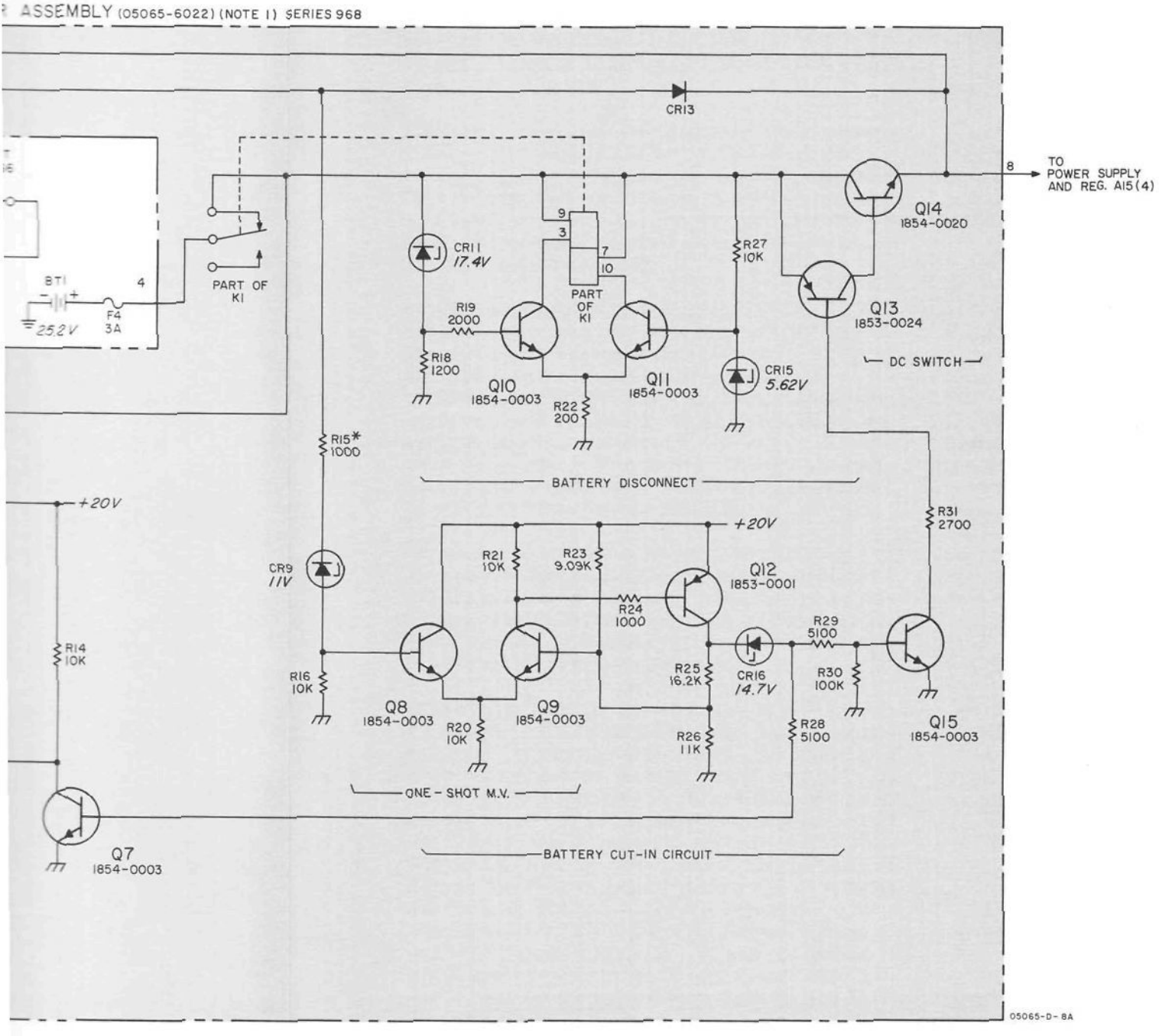

REFERENCE DESIGNATIONS

NO PREFIX	A2
BT1 C4	C1-5 CR1-16
DS3 F4	K1 Q1-15 R1-31
Q4	S1
S6	

DELETED:
CR12, 14
CR10, R17

Figure 8-10. A2 Battery Charge Assembly (Option 002 and 003)

60 MHz FREQUENCY MULTIPLIER A3 THEORY

Frequency Multiplier A3 provides a stable, spectrally clean, 300 milliwatt, 60 MHz signal which connects to harmonic generator/step recovery diode in A12 RVFR Assembly. Another output is the isolated 5 MHz signal to A13 Buffer Amplifier.

The 5 MHz signal from A10 Quartz Oscillator connects through input jack J2 to Q1 buffer amplifier; then through an isolating network to first multiplier stage Q2. Q1 output couples through T1 and through J3 to A13 Buffer Amplifier. R8, R9, R10, and R12 form a 10-dB pad to prevent feedback from Q2 to A10 Quartz Oscillator and output circuits.

Q2 modulator doubler stage doubles 5 MHz to 10 MHz and phase modulates the 5 MHz input at a 137 Hz rate. The primary in Q2 collector circuit is tuned to 5 MHz by C19 producing a strong 10 MHz second harmonic in the rectified output of CR1 and CR2. Phase Modulation is accomplished by varactor diodes CR3 through CR6. Varactor capacitance is varied at 137 Hz by the modulation signal from J1 through R11. This 137 Hz modulation signal is generated in the modulation oscillator portion of A8 Phase Detector Assembly.

Q6 doubles 10 MHz with CR7 and CR8 producing a 20 MHz second harmonic full-wave rectified output. T3 primary is tuned to 10 MHz by C30. Q8 triples with squaring diodes CR11 through CR14 producing strong odd harmonics. C49 tunes L20 to the input 20 MHz and C52 tunes L24 to the 60 MHz output.

Q3 is a MOS FET which furnishes high input impedance for isolation between Q8 tripler stage and the output amplifiers. Q3 voltage gain is about 20. Class A rf amplifiers Q5 and Q7 drive Q9 output amplifier. Q9 output connects through a 3-dB pad (C53, R38, R39, and R41) to J8. J8 output connects through J7 to TP1 and through the pi matching network of C61, C57, C59, and L25 to J4 output jack. This pi network matches the 50 ohm output impedance at J8 with the step-recovery diode in A12 RVFR Assembly. 5.315... MHz connects to the pi matching network through J5 from A1 Synthesizer Assembly. R3 sets the amount of 5.315...MHz that adds to the 60 MHz output. R40 controls dc bias for the step-recovery diode in A12 RVFR Assembly.

Voltage divider R28 and R34 biases feedback diodes CR9 and CR10. These diodes rectifiy the 60 MHz output and produce a dc feedback signal to control Q3 bias with feedback amplifier Q4. In this manner, the 60 MHz output is amplitude stabilized.

A3 MAINTENANCE

NORMAL OPERATION

a. J4 output is 60 MHz, phase modulated at 137 Hz, plus 5.315...MHz that comes from the A1 Synthesizer Assembly.

b. J3 output is 5 MHz, 1 volt into 50 ohms.

c. TP2 is the AGC voltage test point. When Multiplier is operating normally, this voltage will be 4.5 Vdc or greater.

OPERATIONAL CHECK

a. Measure dc AGC voltage at TP2; should be 4.5 V or greater. If less, complete loop alignment procedure, including realignment of the Multiplier pi matching network of Section 5-19, LOOP ALIGNMENT PROCEDURE.

b. Remove the short cable connecting to J8. Using the Micon-to-BNC test cable provided, connect a 50-ohm coaxial load to J8. Connect an RF Voltmeter to this load. The RF meter should read 2.7 to 3.0 V rms. Excessive voltage at this point means that the AGC circuit is not functioning properly.

c. Reconnect P8 and disconnect cable from J4. Connect the test cable with 50-ohm load to J4 and connect the RF voltmeter to the 50-ohm load. The voltmeter should indicate the presence of 60 MHz. Generally this signal will be 1 volt or greater. However, this voltage level will vary a great deal from unit to unit depending on the tuning of the pi matching network in the A3 Multiplier. Reconnect the 60 MHz output cable to A3J4.

d. Remove the cable from J2. This removes the 5 MHz input from A3 leaving only the 5.315...MHz signal on output jack J4. The RF voltmeter should read about 20 mV (this voltage depends on the setting of R3). As a further check, R3 may be adjusted and the change in voltage noted.

NOTE

R3 should be returned to its original setting.

e. Remove the P5 connector. This removes the 5.315...MHz signal. The output voltage should drop to near zero. Replace connections to J5 and J2.

f. Remove cable from J3. Connect test cable and 50-ohm load to J3. Connect RF voltmeter to 50-ohm load. RF voltmeter should read approximately 1 V rms.

g. Remove RF voltmeter and test cable. Reconnect cable to J3. This completes the test. If output signal levels measured above are correct, but there does not appear to be any RF excitation on the A12 RVFR Assembly, the A3 Assembly should be realigned per LOOP ALIGNMENT PROCEDURE, Section 5-19.

TROUBLESHOOTING AND REPAIR

a. REALIGNMENT AFTER REPAIR. When repairs are made within the A3 Assembly, the repaired circuit must be retuned. The following paragraphs give

alignment procedures for the various sections. A 50 MHz oscilloscope, an RF voltmeter, a 50-ohm coaxial load, and the Micon-to-BNC test cable provided are required for these adjustments. After initial alignment and the A3 Assembly reinstalled, the instrument should be completely readjusted as described in LOOP ALIGNMENT PROCEDURE, Section 5-19.

b. ALIGNMENT OF BUFFER AMPLIFIER STAGE Q1.

1) Remove cable from J3. Connect a 50-ohm coaxial load to J3 using the test cable provided and connect RF voltmeter to the 50-ohm load.

2) Remove shield cover for access to C1, C19, C30, and C49.

2) Adjust C1 for maximum signal at the voltmeter. There should be two signal peak for a complete rotation of C1. Tune for the highest peak.

4) Remove voltmeter and test cable from J3 and reconnect P3 to this jack.

c. ALIGNMENT OF DOUBLER STAGES Q2 and Q6.

1) Connect oscilloscope to drain of Q6 and adjust C19 to tune Q2 doubling stage. Select the higher of the two peaks observed.

2) Connect the oscilloscope to the drain of Q8 and adjust C30 to tune Q6 doubling stage. Select the higher of the two peaks observed.

3) Ground TP1 to prevent feedback. Then, using the test cable provided, remove the cable from J8 and connect a 50-ohm load to this jack. Connect the oscilloscope to the 50-ohm load.

4) Adjust C49 for maximum scope signal. Remove the test cable and reconnect P8 to J8.

5) Readjust C19 and then C30 as described in steps 1 and 2. C19 and C30 adjustment is now complete.

d. ALIGNMENT OF Q8 TRIPLER STAGE AND FINAL AMPLIFIER STAGES.

1) Ground TP2 to prevent feedback so that voltages may be monitored within the AGC loop.

2) Remove jumper cable from J8 and use the test cable provided to connect a 50-ohm coaxial load. Connect an RF voltmeter to the 50-ohm load.

3) Sequence through the following adjustments, each time monitoring the drain (or collector) of the following stage with an oscilloscope. In the case of the last stage, Q9, use the RF voltmeter indication for tuning. Starting with C49, retune each of these adjustments at least once:

C18, C33, C46, C49, C52

4) Put the cover on the A3 Assembly and retune C52, C18, C33, and C46 for a maximum indication on the RF voltmeter. Note the voltmeter reading. It should be between 3.2 and 3.6 volts.

5) Remove short from TP2. Voltmeter reading should drop to 2.7 to 3.0 volts due to the AGC feedback. Connect a dc voltmeter to TP2. With the preceeding multiplier adjustments optimized, this AGC voltage should be about 4.5 volts.

6) Remove the test cable and reconnect the jumper cable to J8.

e. A3 MATCHING NETWORK ADJUSTMENTS

The matching network adjustments are as follows:

R40 ..... This control sets bias for the step-recovery diode in the A12 Assembly.

C59, C61, and L25 ..... These adjustments match the multiplier output to the load presented by the step-recovery diode circuit in the A12 Assembly.

The matching network adjustment must be aligned with the A3 Multiplier installed in the system. See Section 5-25, RF ALIGNMENT under LOOP ALIGNMENT PROCEDURE for adjustment instructions.

MODULE REPLACEMENT

When replacing the A3 Assembly after repair or when a new A3 Assembly is installed, the instrument should be completely realigned per Section 5-19, LOOP ALIGNMENT PROCEDURE.

Figure 8-11
A3 MULTIPLIER ASSEMBLY

(See Page 8-25)

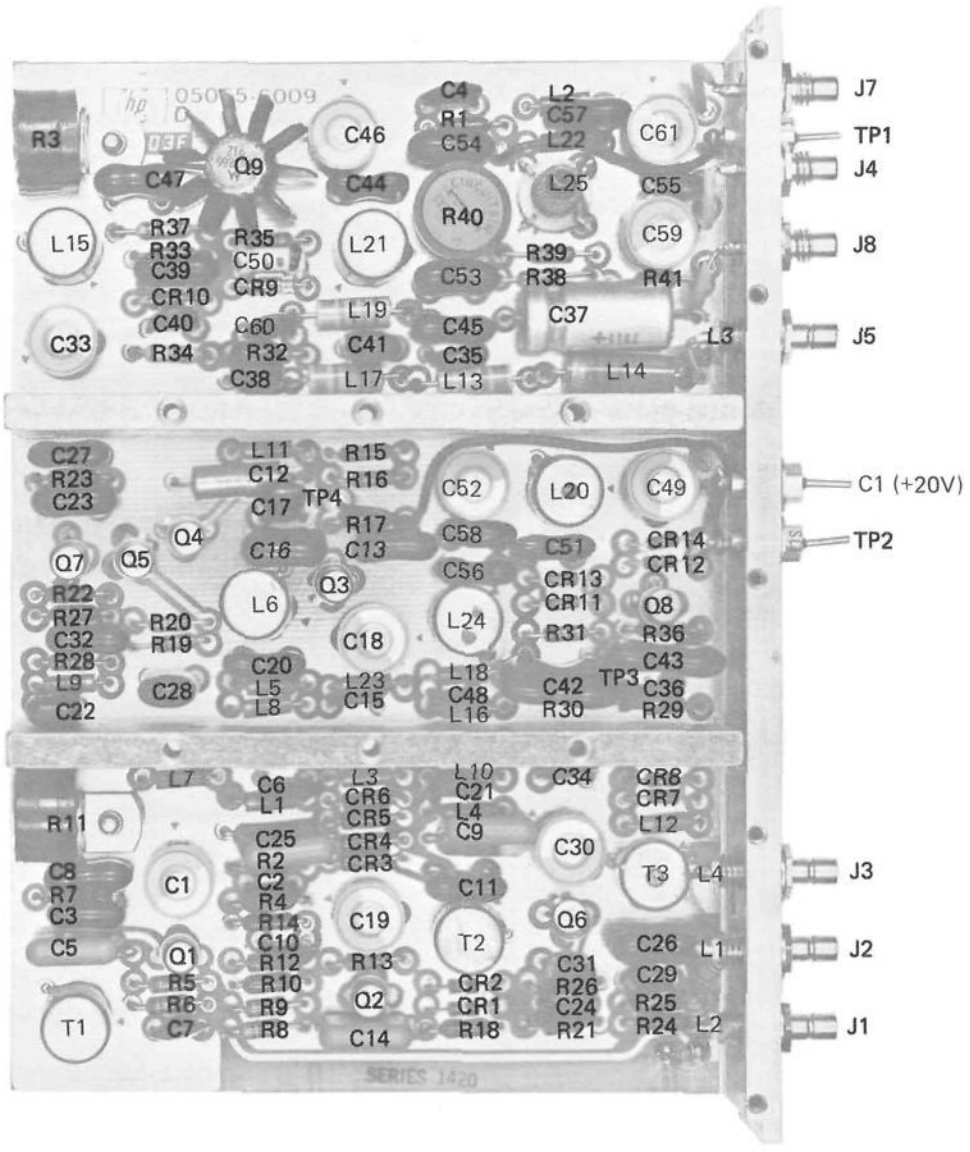

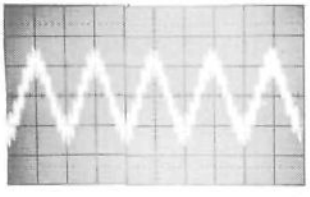

❶ .01 V/cm
.1 μs/cm

.01 V/cm
.1 μs/cm ❷

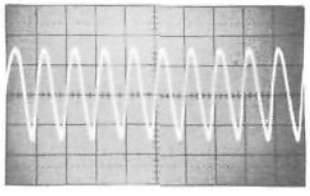

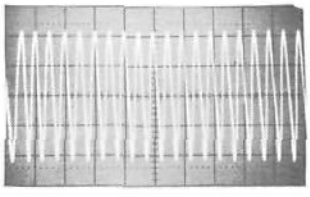

❸ .005 V/cm
.1 μs/cm

.01 V/cm
.1 μs/cm ❹

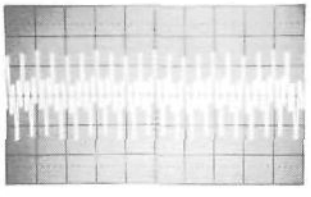

5065A: Normal Operation unless noted.

Oscilloscope: DC coupled

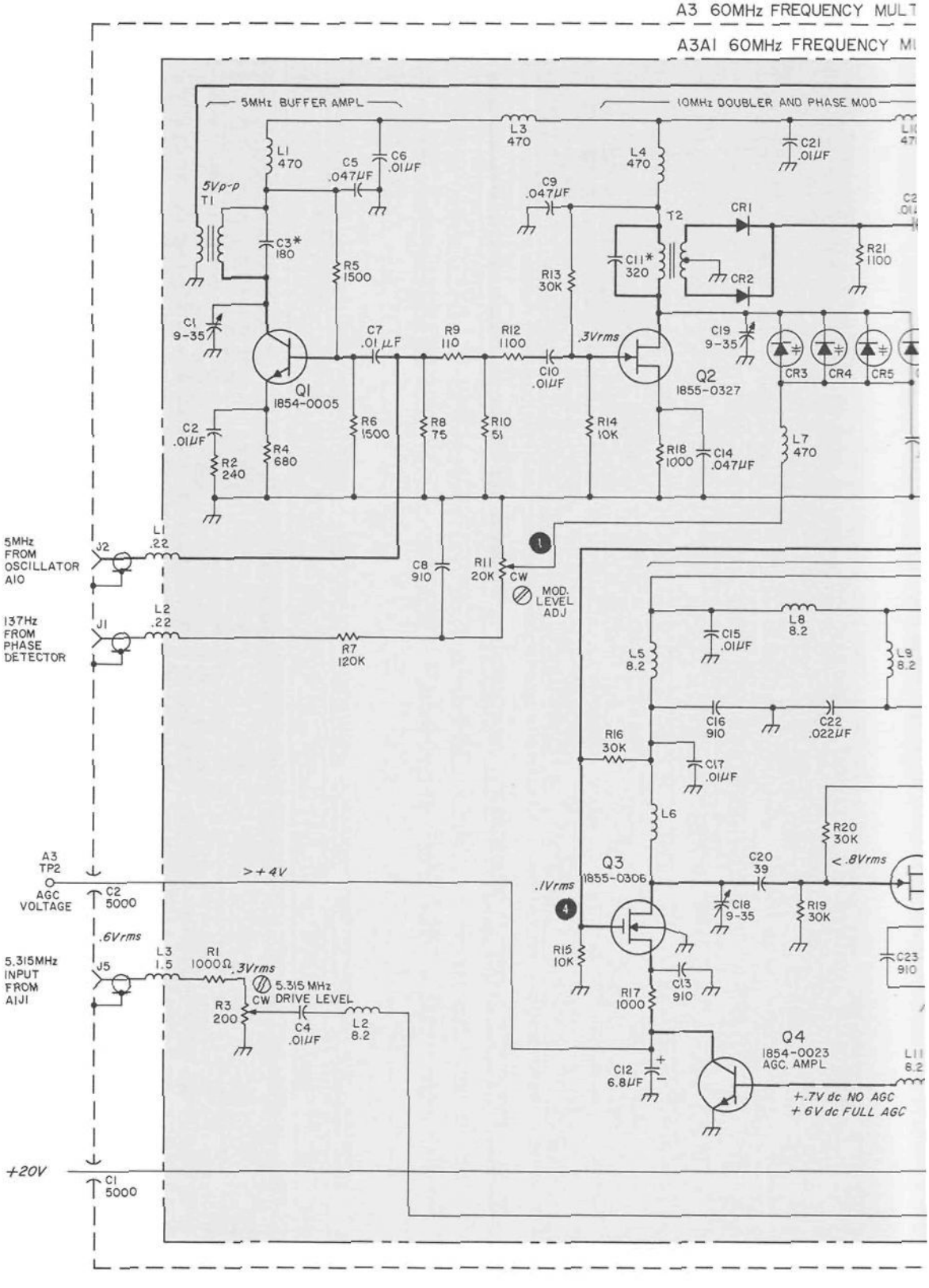
A3 60MHz FREQUENCY MULT
A3A1 60MHz FREQUENCY MU
5MHz BUFFER AMPL
10MHz DOUBLER AND PHASE MOD
5Vp-p
T1
L1 470
C5 .047μF
C6 .01μF
C3* 180
R5 1500
C1 9-35
Q1 1854-0005
C7 .01 μF
R9 110
R12 1100
C10 .01μF
L3 470
C9 .047μF
L4 470
T2
C11* 320
R13 30K
.3Vrms
Q2 1855-0327
CR1
CR2
C21 .01μF
R21 1100
C19 9-35
CR3
CR4
CR5
C2 .01μF
R2 240
R4 680
R6 1500
R8 75
R10 51
R14 10K
R18 1000
C14 .047μF
L7 470
5MHz FROM OSCILLATOR A10
J2
L1 .22
C8 910
R11 20K CW
MOD. LEVEL ADJ
137Hz FROM PHASE DETECTOR
J1
L2 .22
R7 120K
L8 8.2
L5 8.2
L9 8.2
C15 .01μF
C16 910
C22 .022μF
R16 30K
C17 .01μF
L6
R20 30K
A3 TP2
AGC VOLTAGE
>+4V
C2 5000
.1Vrms
Q3 1855-0306
C20 39
<.8Vrms
C18 9-35
R19 30K
R15 10K
C13 910
R17 1000
C23 910
.6Vrms
5.315MHz INPUT FROM A1J1
J5
L3 1.5
R1 1000Ω
.3Vrms
5.315 MHz CW DRIVE LEVEL
R3 200
C4 .01μF
L2 8.2
Q4 1854-0023 AGC. AMPL
C12 6.8μF
+.7V dc NO AGC
+6V dc FULL AGC
+20V
C1 5000

A3 60MHz FREQUENCY MULTIPLIER ASSEMBLY (05065-6078) (NOTE 1) SERIES 1420

A3A1 60MHz FREQUENCY MULTIPLIER P.C. BOARD (05065-6009) SERIES 1420

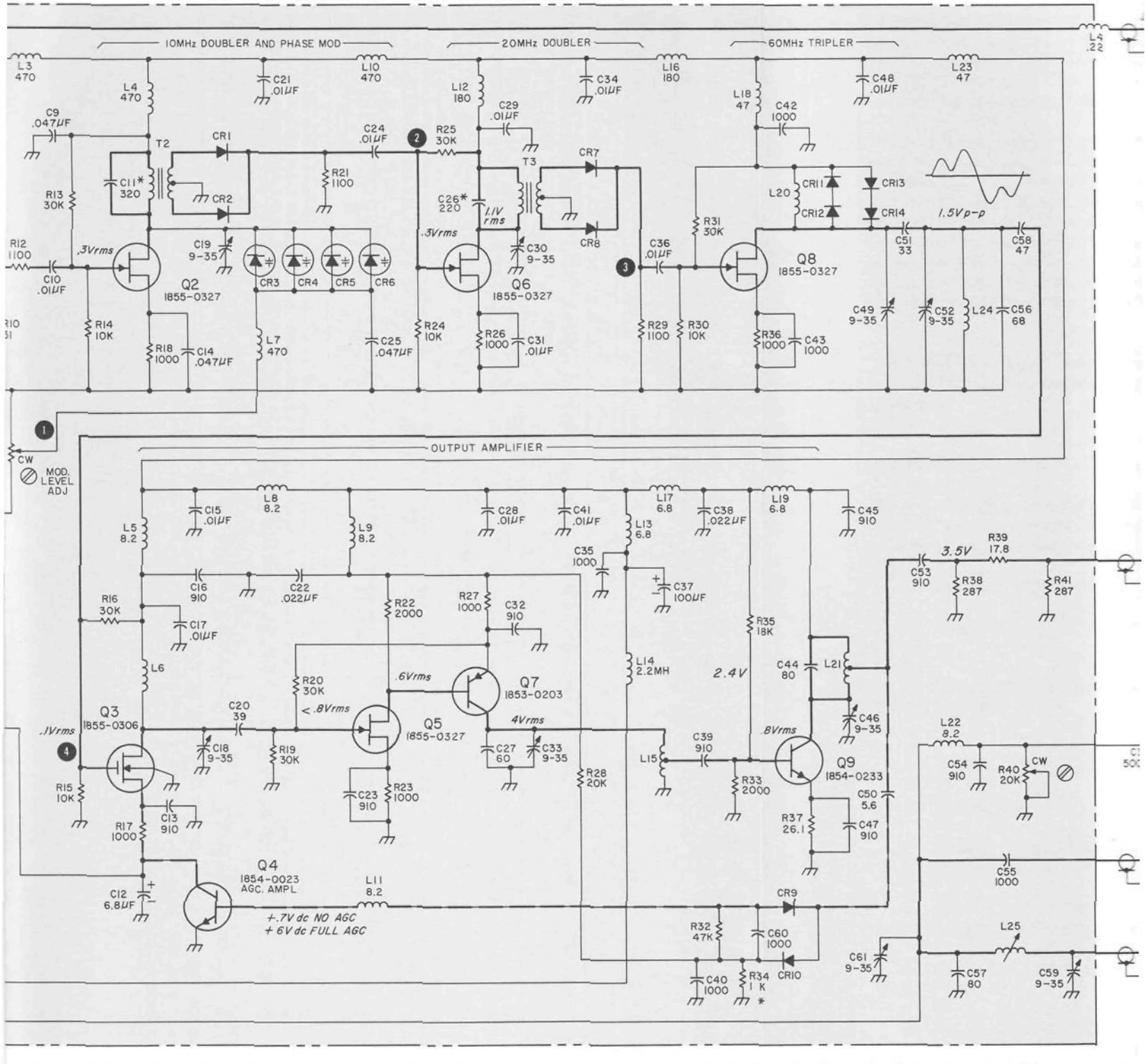

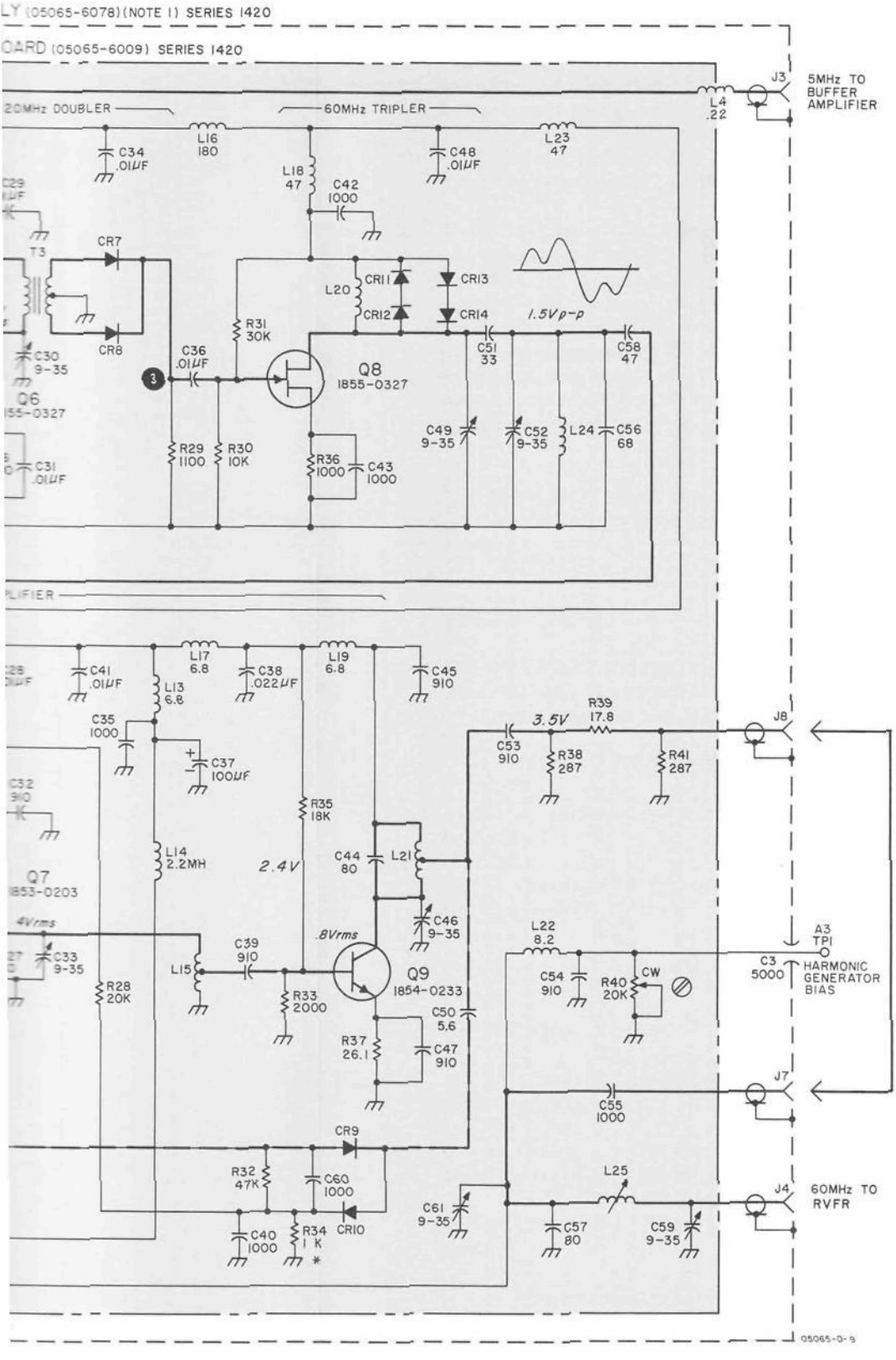

NOTES

1. REFERENCE DESIGNATIONS WITHIN THIS ASSEMBLY ARE ABBREVIATED. ADD ASSEMBLY NUMBER TO ABBREVIATION FOR COMPLETE DESCRIPTION.
2. UNLESS OTHERWISE INDICATED: RESISTANCE IN OHMS; CAPACITANCE IN PICOFARADS; INDUCTANCE IN MICROHENRIES
3. ASTERISK (*) INDICATES SELECTED COMPONENT, AVERAGE VALUES SHOWN.

REFERENCE DESIGNATIONS

A3	A3A1
C1-3	C1-61
	CR1-14
J1-5,7,8	
L1-4	L1-25
	Q1-9
	R1-41
	T1-3
TP1,2	

Figure 8-11. A3 Multiplier Assembly

100 kHz FREQUENCY DIVIDER A4 THEORY

The 100 kHz divider consists of a tuned 1 MHz input amplifier, an integrated circuit decade divider and two tuned output amplifiers. Low pass filters and traps are used to shape the I.C. divider output and to reduce harmonic distortion. The filtered signal drives two tuned amplifiers which provide the sine-wave outputs.

The 1 MHz input signal from A6(9) is amplified by Q1 and saturating transistor amplifier Q4. Decade divider IC1 provides a symmetric 100 kHz square wave at IC1(12). The divided output is amplified and shaped by Q5 and Q7 and is available at A4(14). The divided output is also amplified by Q6, Q8, and Q9 and is available as the 100 kHz output to J1 and J10. A portion of this output is rectified by CR2, filtered by C23, R35, and displayed on front-panel meter at the 100 kHz position.

The 1 MHz input signal is also coupled through emitter-follower Q2 and provides the 1 MHz signal to A5 Digital Divider.

NORMAL OPERATION

The A4 Circuits process the 1 MHz from A6 to produce 100 kHz. An output from A4 is available anytime a 1 MHz signal is fed into A4(6). The A4 outputs are:

a. 100 kHz 1 V/50-ohms at J1 and J10.

b. A buffered 1 MHz output to A5 Digital Divider Assembly.

c. Rectified 100 kHz to CIRCUIT CHECK meter in 100 kHz position.

OPERATIONAL CHECK

a. Observe the CIRCUIT CHECK 100 kHz indication and compare it to Table 5-3.

b. Check for 100 kHz, 1 V rms into 50-ohms at front and rear panel 100 kHz jacks.

c. Check for 1 MHz, .5 V rms into 1 K-ohms at A4(2).

d. Check for no outputs above steps a, b, c, and d when 5 MHz is disconnected or when 1 MHz input signal is removed.

e. Check for 100 kHz and 1 MHz at A4 outputs when 1 MHz input signal is reapplied.

f. Check that the 100 kHz output at J1 and J10 meet specifications as follows:

1) Using the 5065A 5 MHz output as an external time base input to a counter connect the 100 kHz front-panel jack to the counter input and check for 100 kHz ± 1 count. Disconnect the counter.

2) Connect the front panel 100 kHz jack through a 50-ohm feedthrough to an RF voltmeter. Check for 1.0 to 1.5 volts rms. Replace voltmeter with an oscilloscope. Check the 100 kHz output for an undistorted sine-wave. Disconnect the oscilloscope.

3) To check the 100 kHz output harmonic distortion, refer to Table 5-2, steps 4 and 5.

TROUBLESHOOTING

NOTE

For troubleshooting or tuning it will be necessary to mount the A4 circuit card on a HP 05065-6064 circuit board extender. Power should be disconnected before this assembly is removed and reinstalled.

a. Signal Checks

1) To check Q1 and Q4, monitor 1 MHz at IC1(1).

2) To check A2, check for 1 MHz at A4(2).

3) To check IC1, check for 100 kHz at IC1(12).

4) To Check Q6, Q8, Q9, check for 100 kHz, 1 V rms into 50-ohms at A4(11).

b. Tuning Adjustments

1) Connect oscilloscope probe at Q1 collector. Adjust T1 for maximum amplitide at 1 MHz.

2) Connect oscilloscope probe at Q9 collector. Adjust T2 for maximum amplitide at 100 kHz.

3) Make minor readjustments of T1, T2 for a stable 100 kHz, 1 V rms into 50-ohms at A4(11).

MODULE REPLACEMENT

When replacing the A4 Assembly after repair or when a new A4 Assembly is installed, the circuit should be completely realigned per the preceding paragraphs.

Figure 8-12
A4 100 kHz FREQUENCY DIVIDER

(See Page 8-27)

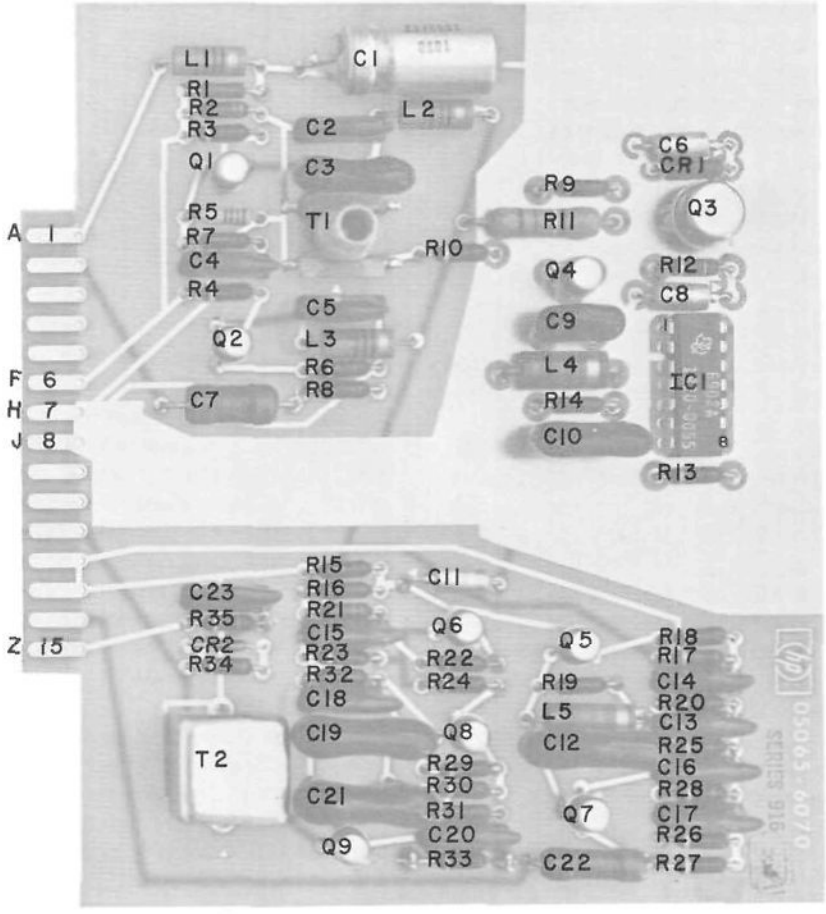

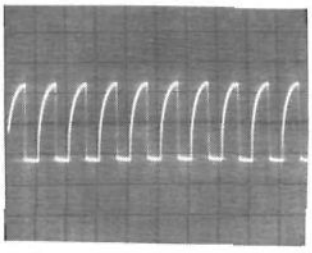

❶ 2 V/cm
1 μsec/cm
dc coupled

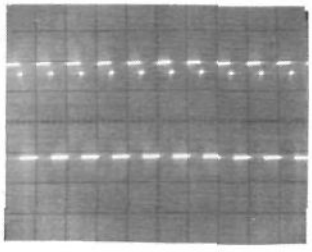

❷ 1 V/cm
10 μsec/cm
dc coupled

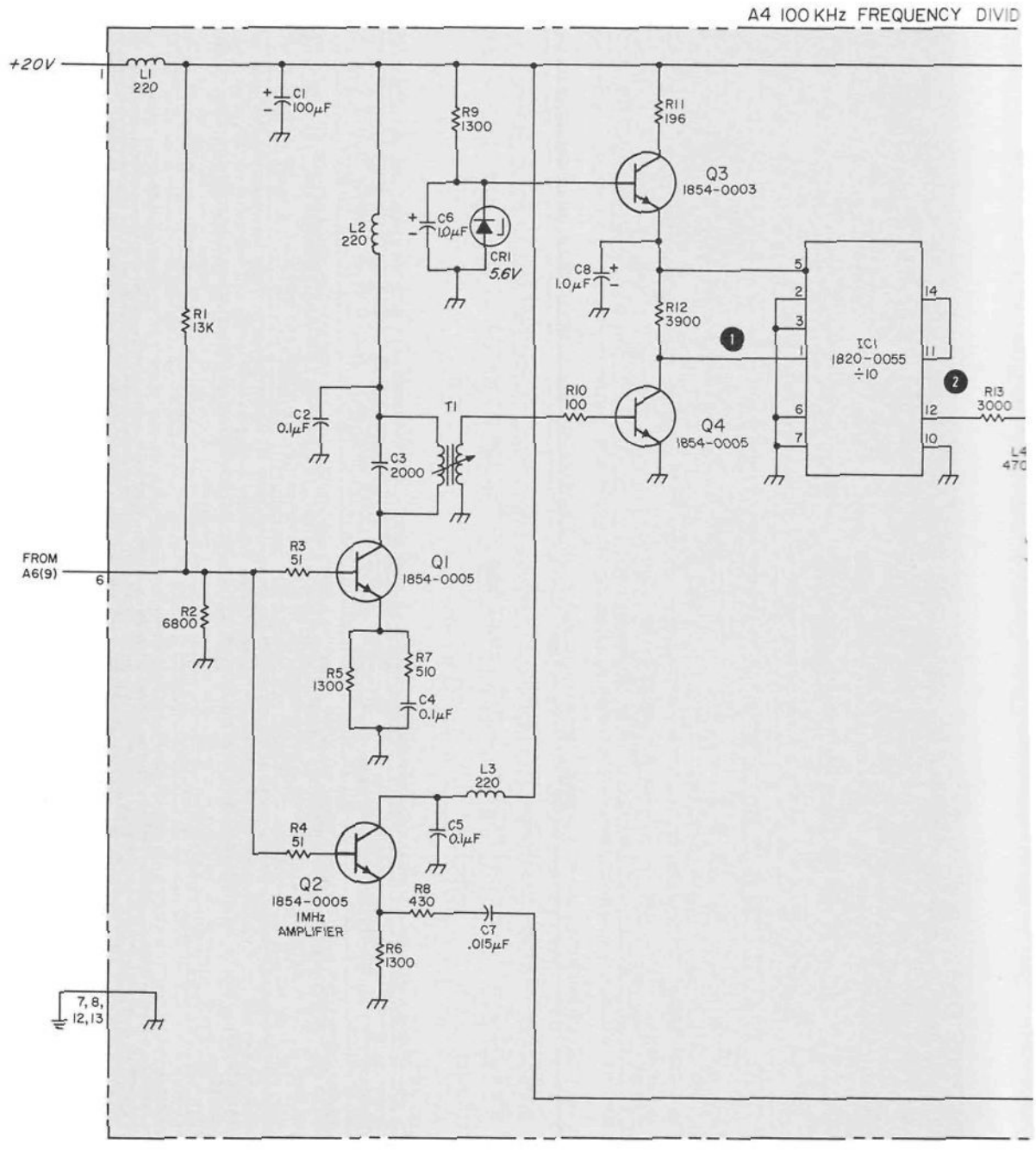
A4 100 KHz FREQUENCY DIVID
+20V
L1
220
C1
100μF
R9
1300
R11
196
Q3
1854-0003
L2
220
C6
1.0μF
CR1
5.6V
C8
1.0μF
R1
13K
R12
3900
IC1
1820-0055
÷10
R13
3000
C2
0.1μF
T1
R10
100
Q4
1854-0005
C3
2000
FROM
A6(9)
R3
51
Q1
1854-0005
R2
6800
R5
1300
R7
510
C4
0.1μF
L3
220
R4
51
C5
0.1μF
Q2
1854-0005
1MHz
AMPLIFIER
R8
430
C7
.015μF
R6
1300
7, 8,
12, 13

A4 100 KHz FREQUENCY DIVIDER ASSEMBLY (05065-6070) (NOTE 1)

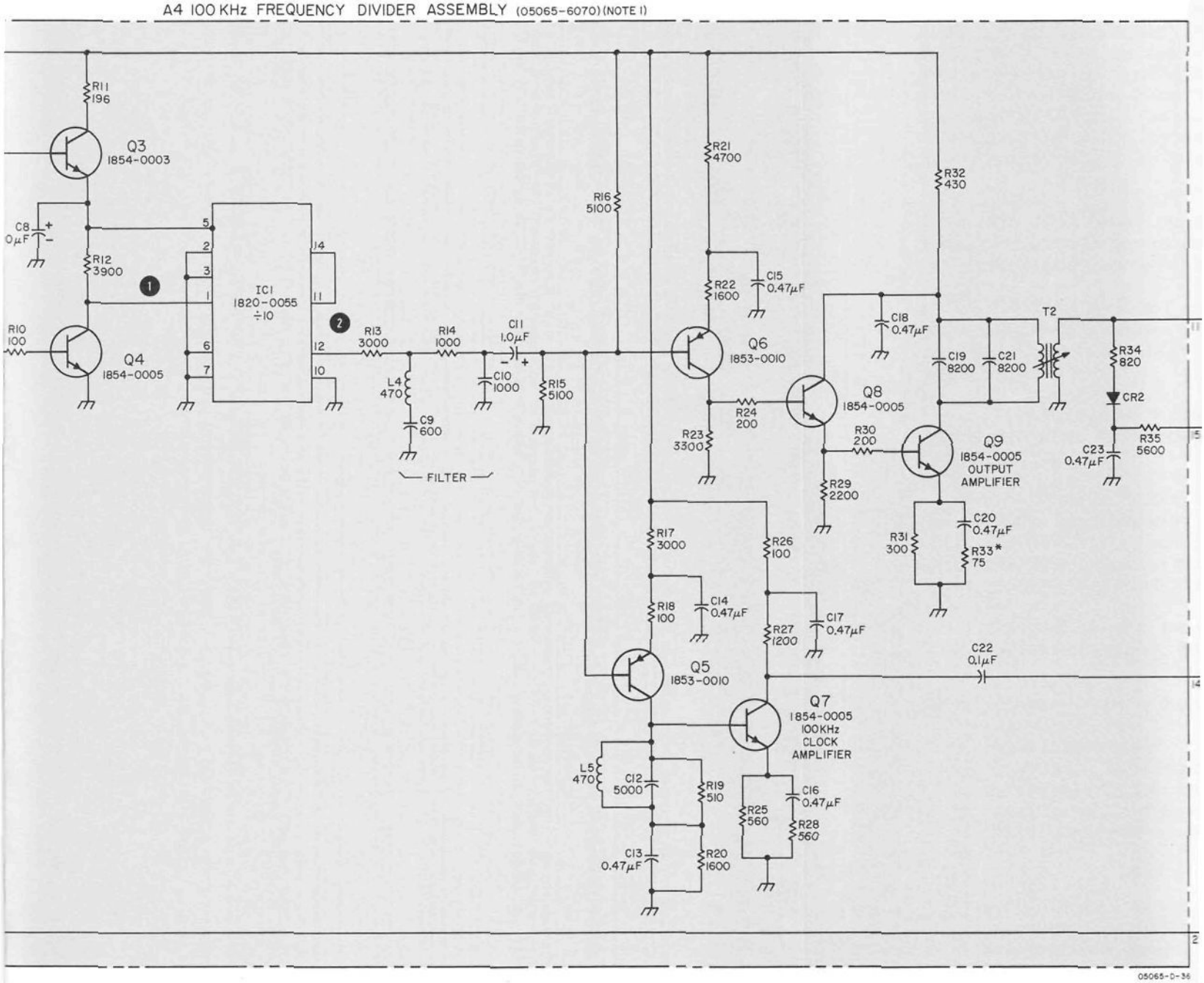

05065-D-36

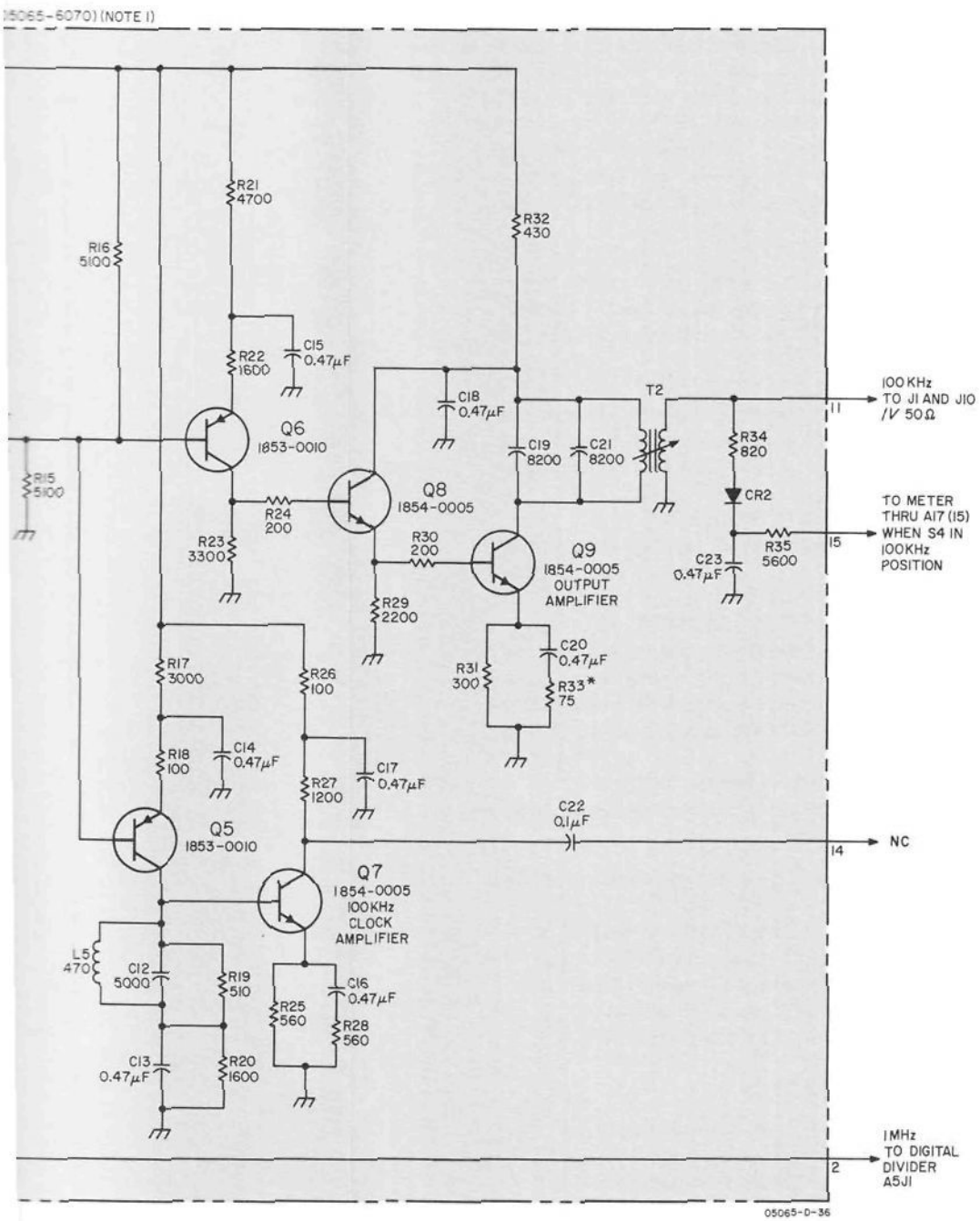

NOTES

1. REFERENCE DESIGNATIONS WITHIN THIS ASSEMBLY ARE ABBREVIATED. ADD ASSEMBLY NUMBER TO ABBREVIATION FOR COMPLETE DESCRIPTION.
2. UNLESS OTHERWISE INDICATED:
   RESISTANCE IN OHMS;
   CAPACITANCE IN PICOFARADS;
   INDUCTANCE IN MICROHENRIES
3. ASTERISK (*) INDICATES SELECTED COMPONENT, AVERAGE VALUES SHOWN

REFERENCE DESIGNATIONS

A4
C1-23 CR1,2 IC1 L1-5 Q1-9 R1-35 T1,2

Figure 8-12. A4 100 kHz Frequency Divider

DIGITAL DIVIDER A5 THEORY

GENERAL DESCRIPTION

In instruments equipped with Time Standard Option 001 or 003, digital divider circuits provide 1 PPS for A16 Assembly (also part of Time Standard Option) which in turn provides two outputs: (1) 1PPS "tick" pulses at the front-panel 1 PPs jack and, (2) the push-pull clock drive for the front panel mechanical clock. Input to A5 module is the internally connected 1 MHz signal from the Frequency Dividers. The top cover is removed for access to A5 controls and the mechanical clock adjustment. Time Standard Option 001 controls are as follows:

a. The TIME DELAY thumbwheel switch on A5 module. This control has six thumbwheels for 1 μsec to 1 sec incremental delay of the output "tick" pulse.

b. The TIME DELAY 0-1 μsec screwdriver adjustment on A5 module provides continuous delay control over any 1 μsec portion of the TIME DELAY thumbwheel switch setting.

c. The FAST and STOP pushbuttons on A5 module permit setting the mechanical clock to the nearest second.

d. The SYNC pushbutton on A5 module is used for automatic synchronization of the output 1 PPS "tick" pulse within 9 to 11 μsec of an external reference sync pulse. This sync pulse must be greater than +5 V with a rise time of less than 0.05 μsec.

e. The "set" knob at the rear of the mechanical clock provides for minute and hour adjustment.

Five subassemblies make up the overall assembly:

a. A5A1 Adapter Board
b. A5A2 Master Clock Board
c. A5A3 Preset Clock Board
d. A5A4 Switch Circuit Board
e. A5A5 Interconnect Board

NOTE

In the following paragraphs, add"A5" to the reference designations used for a complete reference designation. Example: A3IC3 = A5A3IC3.

The 1 PPS "tick" clock pulse and 1 PPS clock-drive output are generated by: (1) digital division and, (2) both incremental and continuous delay. This technique, illustrated by the A5 Block Diagram provides for 0 to 1 sec delay of the 1 PPS "tick" output.

1 MHz from a buffer amplifier in the A4 module connects to the master clock. This master clock section is a 10^{-6} decade counter which produces 1 PPS pulses. The 1 PPS pulses activate the preset clock which delivers a digitally delayed 1 PPS pulse. The preset clock provides for delay in increments of 1 μsec up to 1-second. The TIME DELAY thumbwheel switches provide the preset delay information. Continuously variable delay over a zero to 1 μsec period is furnished by the zero to 1 μsec TIME DELAY control working in conjunction with an adjustable one-shot multivibrator. The variable delay adds to the incremental delay to provide fully adjustable delay from zero to one full second.

With the reset gate open, 1 MHz pulses are processed in the input filter shaper and applied through the reset gate to 1 MHz MV A2IC2 as shown in the Functional Block Diagram. This IC drives master preset clock MV A2IC3 and also delivers a 0.2 μsec pulse to output gates A3IC2 and A3IC12B. A2IC3 feeds 0.2 μsec, 1 MHz pulses to the master clock and the preset clock as count pulse inputs.

The master clock consists of six, serially-connected, divide-by-10 decades for a 10^{6} division, thus producing the 1 PPS output. These 100 msec, 1 PPS output pulses initiate reset and preset of the preset clock. When actuated by a master clock pulse, reset one-shot mV A3IC15 delivers a 1.3 μsec reset pulse to the preset clock, and also triggers preset one-shot mV A3IC16. This IC delivers a 0.5 μsec preset pulse to the thumbwheel switch circuits to preset thumbwheel binary information into the preset clock and thus produce the required delay. A coincidence output from NOR gate A3IC17B holds the preset clock input closed during the reset and preset period.

At the end of the reset and preset period, 1 MHz pulses from A2IC3 drive the preset clock until the total of preset counts plus the number of 1 MHz pulses = a 999,999 count. At this time, the 9's detector circuit provides the necessary inputs to AND gate A3IC12A for a 1 μsec, 1 PPS output. This is the gating signal for A3IC2C.

This 1 PPS output is incrementally delayed by the thumbwheel switch setting. The second input to AND gate A3IC2C is the train of 1 MHz pulses from A2IC2. Coincidence between A3IC2C inputs produces a 0.2μsec output that connects through NOR gate A3IC2D to the variable delay circuit on A5A4 circuit board and to the clock drive amplifiers.

Variable delay from 0 to 1 μsec is furnished by the TIME DELAY screwdriver control to adjust variable one-shot mV A4IC1. The amplified A4Q1 output connects through J3 to A16 module where the 1 ((S pulse is shaped and narrowed for the "tick" output at the front panel 1 PPS jack.

The other output of A3IC2D is amplified by Q13 and Q15 for an output to the clock drive circuit in A16 module. To speed up the clock drive output, the FAST pushbutton is depressed for a 10-PPS output. To slow down the clock, the STOP pushbutton shorts the clock output to ground when depressed.

CIRCUIT DESCRIPTION

The 1 MHz drive signal connects through J1 to A5A2(1) Master Clock Board. The master clock board has the following circuits:

a. Input Filter and Shaper Circuit
b. Sync One-Shot mV Circuit
c. Gated 1 MHz mV and the Master and Clock Drive mV
d. Master Clock (six decades connected for a 10^6 division)

INPUT FILTER AND SHAPER

Diodes A2CR1 and A2CR2 limit input signal level. A2Q1 and A2Q2 drive the 1 MHz high "Q" filter to suppress unwanted signals. A2C4 resonates T1 at 1 MHz. CR3 provides regulated bias for A2Q1. In the filter circuit, A2C9 tunes A2Y1 to 1 MHz. The spectrally clean 1 MHz signal from A2Y1 is applied to shaper amplifiers A2Q4 and A2Q6 to drive gated 1 MHz MV A2IC2. Diode A2CR5 and saturating amplifier A2Q6 provide the shaping (squaring) action.

GATED 1 MHz MULTIVIBRATOR

A2IC2 produces a 1 MHz, 200 nsec wide, positive pulse for 1 MHz clock drive MV A2IC3. This pulse also goes to the output gates on A5A3 circuit board [A5A2(4) to A5A3(5)] to A5A3IC2C(1) and to A5A3IC12B(9). When proper gate sequencing occurs, this pulse is gated through A3IC2C or through A3IC12B (as shown in the timing diagrams) to the 1 PPS output circuits.

The 1 MHz master and preset clock multivibrator A2IC3 is triggered by the negative transition of A2IC2 output pulse, producing a negative 1 MHz output pulse at A2IC3(7) delayed by 150 nsec. This pulse is the count pulse for the master and preset clock.

The master clock is a six-decade divider producing a negative, 100 msec wide, 1 PPS output. This master pulse controls the reset and preset circuits of the preset clock divider. Since all decades of the master clock are identical, only A2IC6 will be discussed.

Normally, decade dividers are allowed to fill until the count cycles to "0". At this time, an output pulse is applied to the next decade. Thus, for each 10 inputs, 1 output pulse is applied to the next stage. However, this technique introduces error due to decade cycling time and decade temperature sensitivity. This error is accumulative through a divider chain and, with 6 decades, could amount to as much as 1 μsec. The technique used in the master clock divider reduces this error to less than 100 nanoseconds.

An "H" input pulse at A2IC6(5) is necessary for the decade to divide; therefore, all count inputs to the inverter A2IC4A(1) must be "L". When the decade is at "0", voltage levels at pins 6, 7, 8, and 1 are "H" and output NAND gate A2IC12A(6) will be "L", applying a "L" count pulse to the following decade inverter. If any input signal to NAND gate A2IC12A is "L", the following decade inverter will receive an "H" which will not count.

The 1 MHz "L" pulses applied to A2IC4A(1) are inverted and applied to divider, A2IC6. As the count progresses within the IC, pins 6, 7, 8, and 1 will change from "H" to "L" at various counts as shown in the timing diagram for A2IC6. When the tenth count pulse is applied to A2IC6(5), the divider cycles to "0" and A2IC6 (6, 7, 8, and 1) place an "H" at A2IC12A (1, 2, 4, and 5). However, A2IC12A(6) is still "H" because the same pulse cycling the decade to "0" places an "L" through A2CR6 to the NAND gate, holding it closed. When this pulse goes "H", the NAND gate applies an "L" to the following decade input inverter as a count pulse. This state will remain until the next "L" count pulse, "1", is applied to A2IC4A(1). A2IC12A(3) goes "L", closes the gate and ends the "L" input to the following decade input inverter. Since the actual output pulse was not processed through the decade, delay due the decade is eliminated.

This process is repeated through the five remaining decades with the final output master tick, 1 PPS, 100 msec, negative pulse applied to the following preset clock divider and associated circuits.

RESET AND PRESET ONE-SHOT CIRCUITS

Operation of Digital Divider A5 is illustrated in the A5 timing diagrams. The 1 PPS master clock tick triggers reset one-shot A3IC15 producing complementary 1.3 μ sec pulses at pins 7 and 10. The "L" signal at pin 7 drives reset amplifiers A3Q7, A3Q9, A3Q11, and decade control NOR gate A3IC17B through inverting amplifier A3IC17A. This signal resets decade A3IC3, A3IC4, A3IC5, A3IC6, A3IC7, and A3IC8 to "0". During the decade reset time, A3IC17B(7) output holds all decade input NAND gates closed to any input count. Each time the reset one-shot is triggered, a 1.3 μsec "H" signal is also placed at NAND gate A3IC12B(10).

When the complementary 1.3 μsec pulse at A3IC15(10) goes "L", it triggers preset one-shot A3IC16. The output at pin 10 of A3IC16 is inverted by A3Q8, A3Q10, and A3Q12 applying a 0.5 μsec "L" preset pulse into the thumbwheel switches to preset the desired count into the preset clock. The same signal at A3IC16(10) causes NOR gate A3IC17B(7) to remain "L" an additional 0.5 μsec, which holds the decade input NAND gates closed to any input count during this presetting action. The preset clock decades are now reset and preset.

PRESET CLOCK DIVIDERS

Six adjustable decade dividers make up the preset clock divider. The dividing scheme allows division by any integer between 1 and 10^6 by simply setting TIME

DELAY thumbwheel switch S1A through S1F. This adjusts the divider output phase from 1 μsec to 1 sec. The phase adjustable output pulse is a 1 PPS, 1 μsec, "L" signal at 9's detector NAND gate A3IC12A(6), applied to inverter A3Q6 and gate around one-shot A3IC13(9). The relationship between the 1 MHz input, the master clock 1 PPS output, and the preset clock 1 PPS, 1 μsec, output "L" pulse can be seen in A5 Digital Divider Timing Diagrams.

The standard decade divider provides one output pulse for each 10 input pulses. Preset divider A3IC3 provides an output pulse through NAND gate A3IC9 to 9's detector A3IC12A(5) and to the following decade when the preset count plus the input count total "9" (input to following stage occurs at "8" and continues through "9"). Operation of A3IC3 is the same as that shown in the timing diagram for A2IC6 decade.

When the decade count is "0", all binary outputs are "H" but as the count progresses, levels at pins 6, 7, 8, and 1 change state depending on the number of pulses into the decade. At the count of "9", pins 1 and 6 are "L" (representing "9") and pins 7 and 8 are "H". The next input pulse "10" will cycle the decade to "0" and the count begins again.

To change the decade to a divide-by-2 divider; when the decade state is "0" (pins 6, 7, 8, 1 "H") and before any input signal is applied to pin 5, pulses are applied to pins 6, 7, and 8 driving them "L". The decade state is now "7" before any input signal is applied. The first 2 input pulses cause pins 6 and 1 to go "L" and a "9" is sensed at the output IC9A(3, 5). Thus, with only two inputs there is an output or divide-by-2 action.

The preset clock divider chain may be set to divide by any integer from 1 to 10^6 by setting the complement 9 into the decades prior to the counting sequence. This is done automatically by TIME DELAY thumbwheel switch S1A through F. Whatever time delay is set on the switch, the complement "9" is set into the preset clock dividers prior to counting.

Assume a 1 μsec delay is set on the thumbwheel switch; this presets 999998 into the dividers (switch setting is 000001). When the master clock has completed its counting sequence, the master tick output triggers the reset and preset circuits in the preset divider section. During reset and preset time, preset divider decade inputs are held closed. During preset time, 999998 is set into the decades via the thumbwheel switch and "H" signals are preset at A3IC12A(2, 3, 1, 4). However, this gate will not change state since an "L" is present from A3IC9A(6) (this decade has the count of "8").

The first decade receives the first count pulse causing A3IC9A(6) to go "H" which causes A3IC12A(6) to go "L" until the next input pulse to A3IC1A(13) which arrives 1 μsec later. The 1 sec "L" signal is inverted by A3Q6 and applied as an "H" pulse to NAND gate A3IC2(2). The next gated 1 MHz output pulse from A2IC2 will also place an "H" signal at A3IC2C(1). This causes gate A3IC2C to change state and apply an "H" signal through NOR gate A3IC2D to the 0-1 μsec variable delay mV on A5A4 Switch Board Assembly.

If a delay of 2 μsec is desired, the sequence of events is the same except 999997 would be the preset input information. Instead of the first pulse into A3IC3(5) causing A3IC12A to change state, the second pulse causes the state change; thus, the pulse applied to the 0-1 μsec delay MV on A5A4 circuit board is changed in phase by an additional microsecond. This same sequence of events occurs for all switch settings except 999999.

When 999999 (note the A5 timing diagram) is set on the thumbwheel switch, no preset information is set into the dividers and they divide by 10^6. When this occurs, the preset clock and master clock are dividing by the same number. The dividers reach a count of 999999 and a small pulse is produced at A3IC12A(6). This pulse triggers gate around one-shot A3IC13, producing an "H" 1.1 μsec pulse that is applied to A3IC12B(12). When the master tick goes "L", A3IC12A(6) goes "H" and A3IC15 reset one-shot is triggered. This places another "H" pulse at NAND gate A3IC12B(10). With two of the required three inputs present, the next gated 1 MHz pulse will gate through A3IC12B(9) and NOR gate IC2D to the output circuits.

The 1 PPS output at A3IC2D(6) connects to A5A4 Switch Circuit Board and is processed by variable delay one-shot MV A4IC1 for a 0-1 μsec time delay. This screwdriver adjustment provides continuous control over the 0-1 μsec period. The delayed output pulse connects from amplifier inverter A4Q1 to the "tick" blocking oscillator in the A16 Digital Divider Power Supply module which delivers the 1 PPS "tick" pulse to the front panel jack.

For the clock-drive output, A3IC2D(6) 1 PPS output is amplified by A3Q13, A3Q14, and A3Q15, and routed to the clock drive amplifier on A16 Digital Divider Power Supply. When the STOP pushbutton is depressed, A3Q15 clock drive output is grounded to stop the front panel clock. When the FAST pushbutton is depressed, preset divider A3IC8 input pulses are routed through A5S1 to A3Q14 for a 10 PPS clock drive output. This speeds up the front panel clock to advance it.

The 1 PPS output is synchronized to an external pulse by pressing SYNC pushbutton A5S2. This allows the external pulse feeding in from SYNC jack A5J5 to trigger one-shot MV A2IC1, resetting the master clock through A2Q5 to "0" and holding the input to gated 1 MHz one-shot mV A2IC1 off for 7.3 μsec. At the end of the 7.3 μsec period, the counting sequence will start. Resistor A2R16 and capacitor A2C10 are adjusted for the 7.3 μsec period.

A5 MAINTENANCE

NORMAL OPERATION

Digital divider circuits provide one pulse-per-second output ticks available at front and rear panel 1 PPS BNC output jacks. The divider drive is an internally connected 1 MHz signal from Frequency Divider Assembly A6. Option 001 circuits also provide drive for front panel digital clock.

OPERATIONAL CHECK

Complete operational check is given in Table 5-2, item 7.

TROUBLESHOOTING

The entire digital divider assembly may be removed and reconnected for troubleshooting. Extender board (HP Part No. 05061-6073) furnished, makes circuit board components available for testing.

Digital divider power supply common is isolated from instrument common. To observe waveforms and measure divider voltages, divider common may be connected to instrument common for troubleshooting with no adverse effect. However, this connection must be removed when divider is reassembled.

Each circuit board inputs and outputs are available on interconnection board assembly A5A5. Thus, trouble may be isolated to one specific board assembly before disassembling the entire unit. Troubleshooting table and schematic diagrams provide troubleshooting information.

Periodic adjustments to divider circuits are not necessary. When adjustable components or components related to adjustable components are replaced, the following adjustments should be made.

a. A5A2T1 Adjustment. With instrument in normal operation (frequency divider on) connect RMS Voltmeter to A5A2T1 secondary. Adjust A5A2T1 for maximum voltage indication on voltmeter.

b. A5A2C9 Adjustment. With instrument in normal operation (frequency divider on) connect oscilloscope to A5A2Q6 collector. Adjust A5A2C9 for most symmetrical square wave observed on oscilloscope.

c. A5A2C10 Adjustment. With instrument in normal operation (frequency dividers on) set TIME DELAY thumbwheel switch to "000000" and 0-1 μsec TIME DELAY adjust to max. cw. Externally synchronize digital divider circuits (Paragraph 3-23). Using an oscilloscope, compare external synchronization pulse with 1 PPS output pulse. Adjust A5A2C10 for 10 μsec 1 PPS delay ± 1 μsec.

Troubleshooting Table

Will not synchronize to external pulse.	Check external pulse characteristics (Table 1-3). Check sync circuitry A5A2 (Q3, IC1, Q5, and Q7).
Incorrect output pulse shape.	Check output circuits (A16) A5A4 (IC1, Q1), (Q7 and Q10), and 13.3 V supply (A16).
TIME DELAY switch does not affect output pulse time delay.	Check each switch position (Table 5-2, Item 7). If symptom is in only 1 or 2 switch positions, check preset circuitry associated with those positions including preset coupling diodes and the associated decade. If symptoms are present regardless of thumbwheel settings, refer to Table 5-6. If output stops only when thumbwheel setting is "999999" trouble is probably in A5A3 (IC13,IC12B, or IC2D).

MODULE REPLACEMENT

No adjustments required when Digital Divider Assembly or circuit board assemblies are replaced.

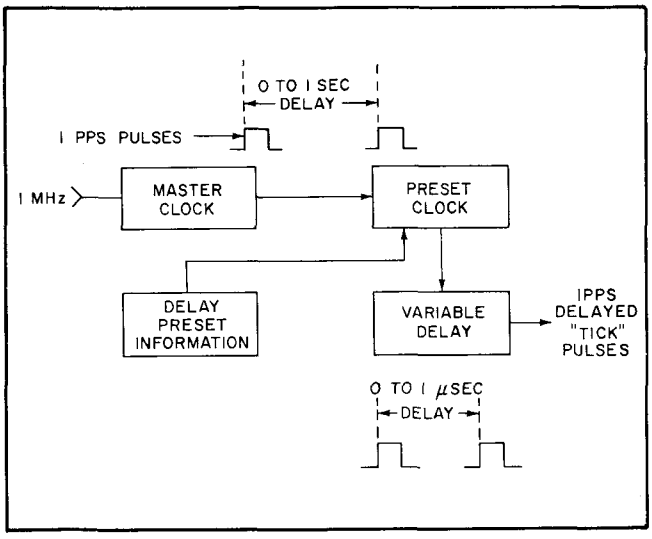

Digital Divider Timing Diagrams

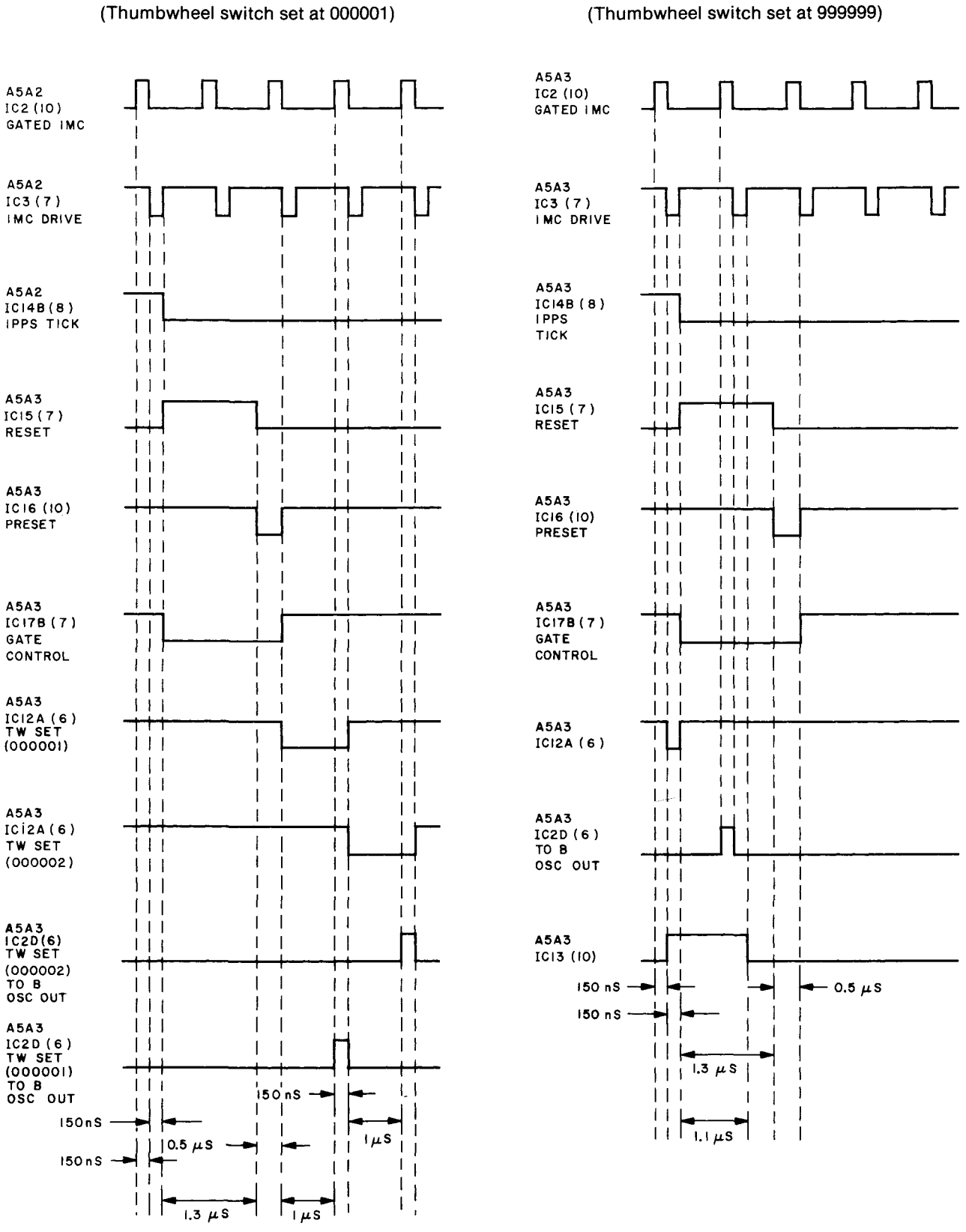

Figure 8-13
A5 DIGITAL DIVIDER ASSEMBLY (OPTION 001)
(Sheet 1 of 3)

(See Page 8-33)

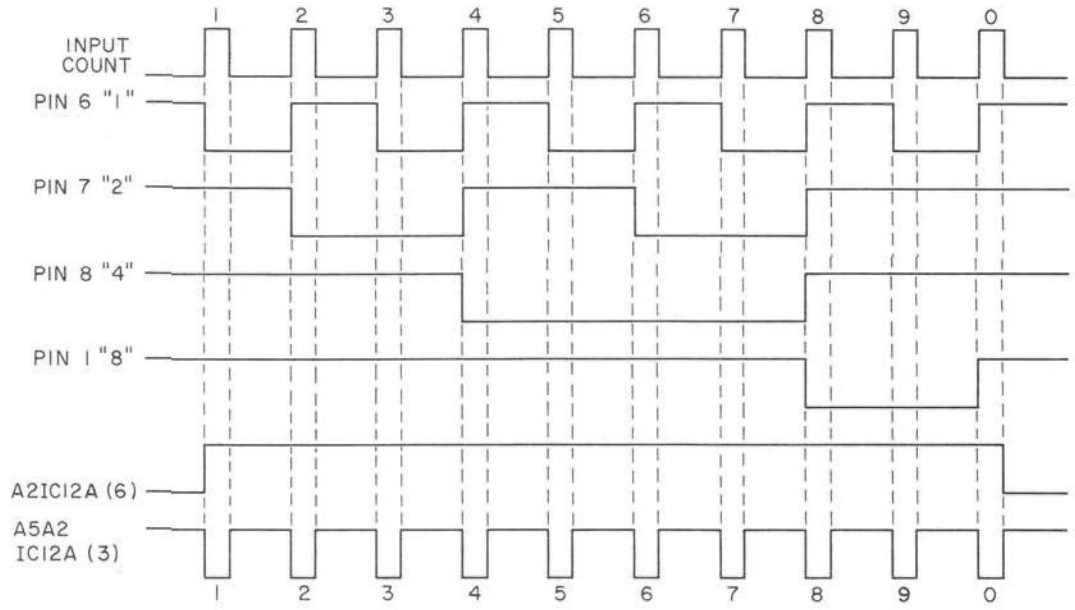
1 2 3 4 5 6 7 8 9 0
INPUT COUNT
PIN 6 "1"
PIN 7 "2"
PIN 8 "4"
PIN 1 "8"
A2IC12A (6)
A5A2 IC12A (3)
1 2 3 4 5 6 7 8 9 0

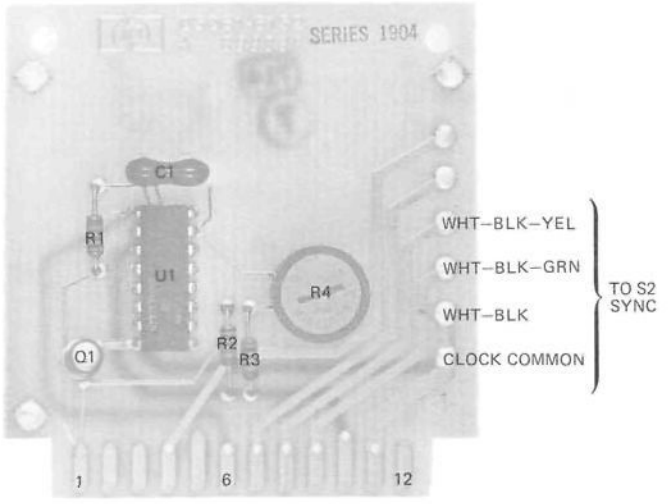
SERIES 1904
C1
R1
U1
R4
R2
R3
Q1
WHT–BLK–YEL
WHT–BLK–GRN
WHT–BLK
CLOCK COMMON
TO S2 SYNC
1
6
12

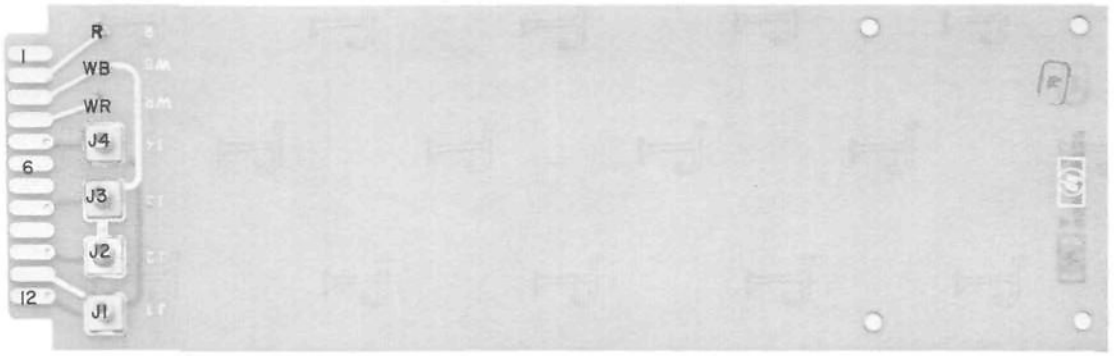
R
WB
WR
J4
J3
J2
J1
1
6
12

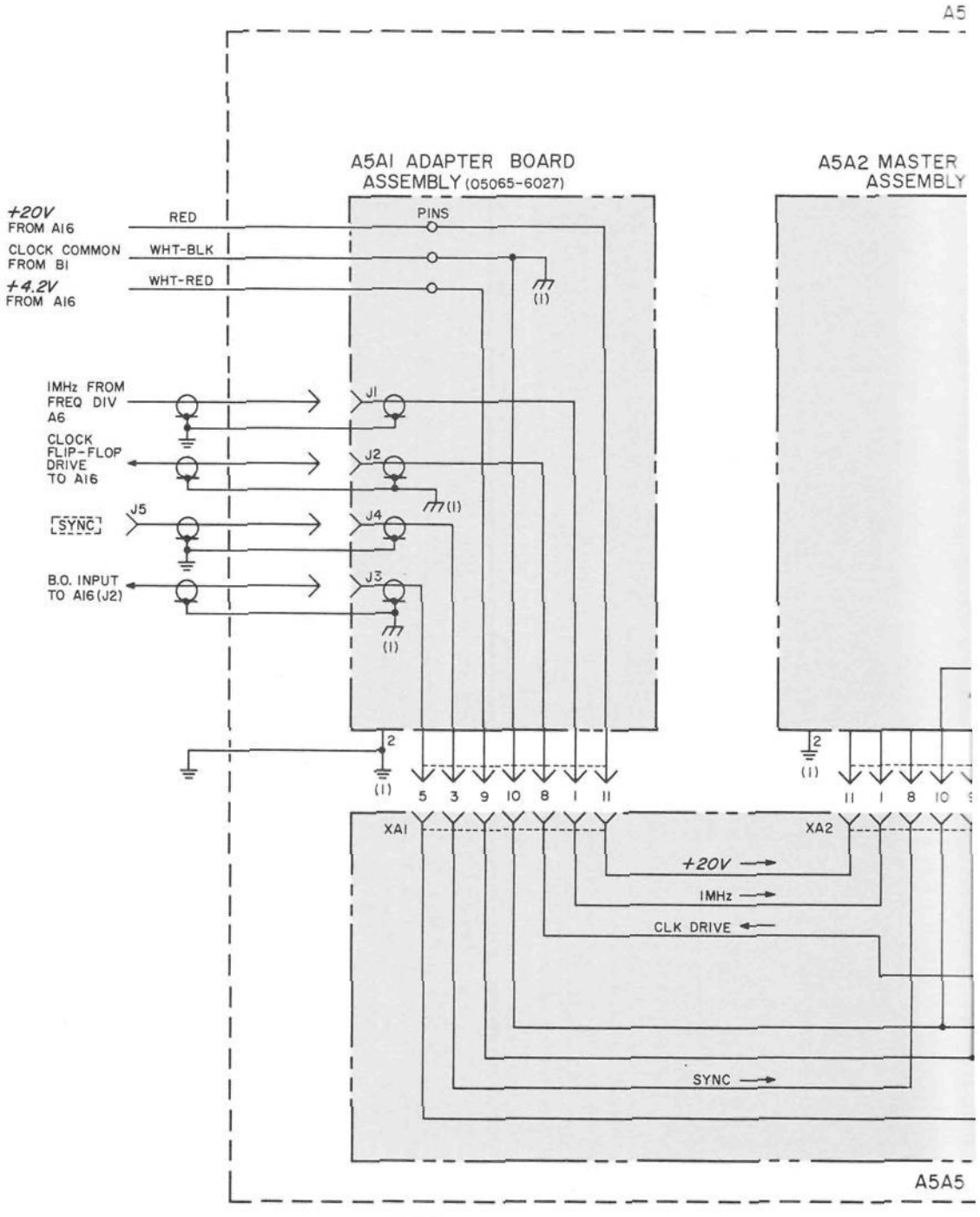

NOTES

1. REFERENCE DESIGNATIONS WITHIN THIS ASSEMBLY ARE ABBREVIATED. ADD ASSEMBLY NUMBER TO ABBREVIATION FOR COMPLETE DESCRIPTION.
2. UNLESS OTHERWISE INDICATED:
   RESISTANCE IN OHMS;
   CAPACITANCE IN PICOFARADS;
3. ASTERISK (*) INDICATES SELECTED COMPONENT, AVERAGE VALUES SHOWN.

A5 DIGITAL DIVIDER ASSEMBLY (05065-6084) (NOTE 1) SERIES 1904

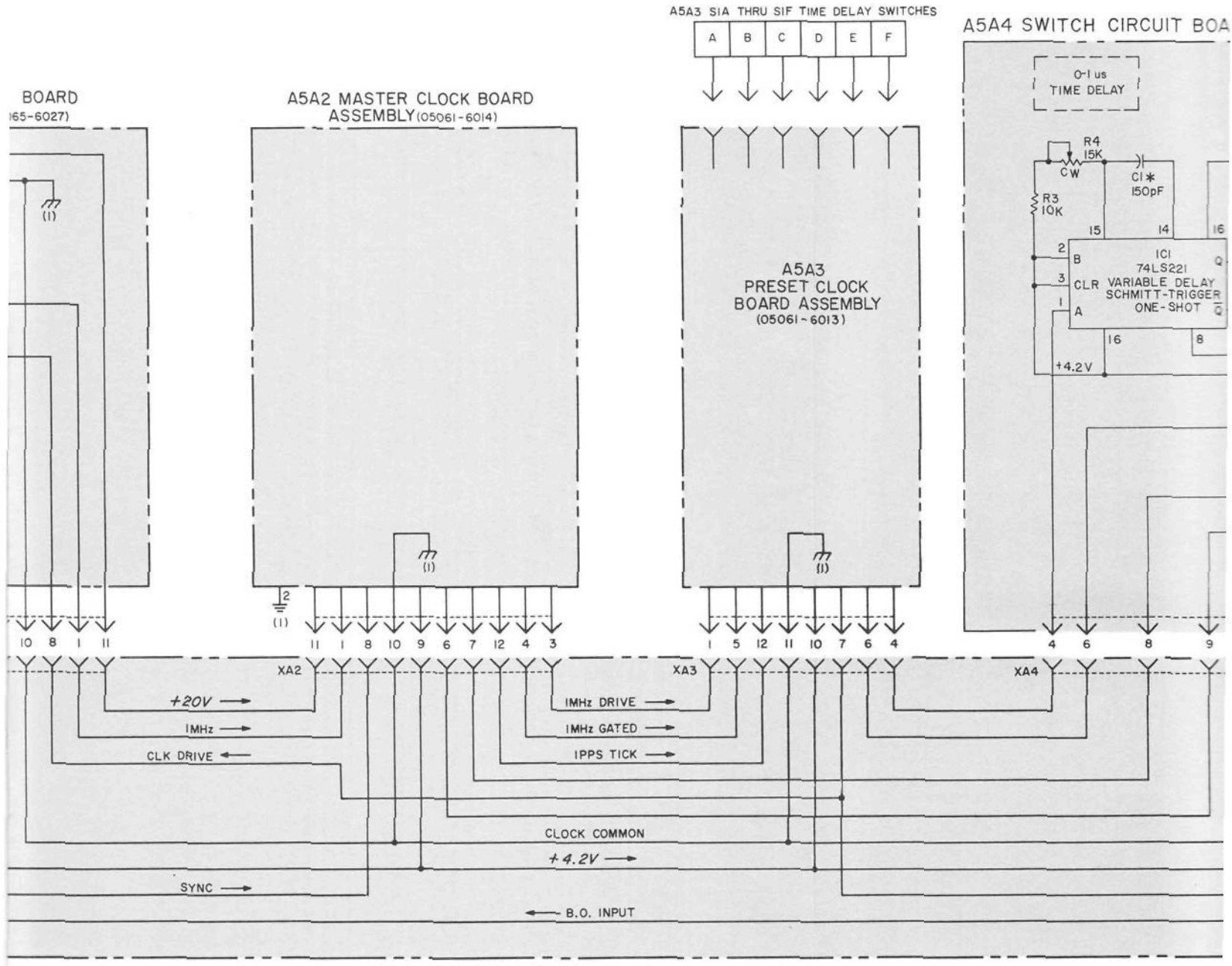

A5A5 INTERCONNECT BOARD ASSEMBLY (05065-6026)

REFERENCE DESIGNATIONS

NO PREFIX	A5	A5A1	A5A3	A5A4
J5	S1-3	J1-4	S1	C1,2 IC1 Q1 R1-3

WITHIN THIS
ED. ADD
REVIATION
I.

TED:

ADS;

ECTED
ES SHOWN.

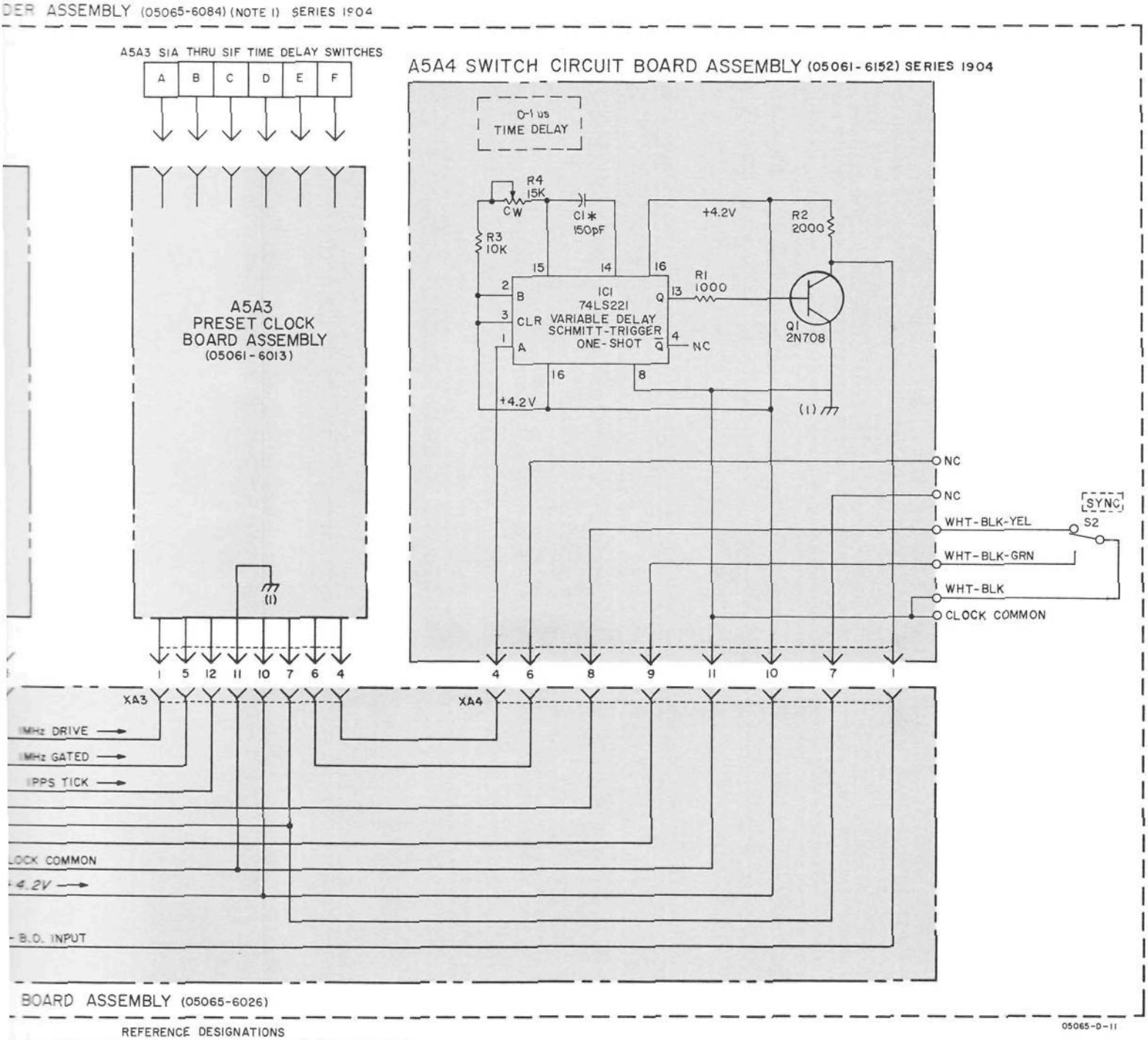

REFERENCE DESIGNATIONS

NO. EFIX	A5	A5A1	A5A3	A5A4
	S1-3	J1-4	S1	C1,2 IC1 Q1 R1-3

Figure 8-13. A5 Digital Divider Assembly (Option 001)
(Sheet 1 of 3)

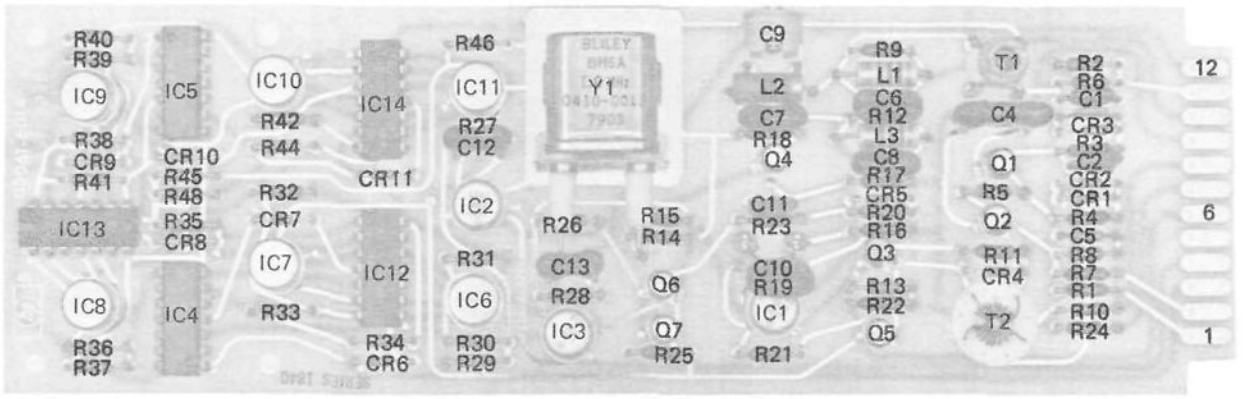



❶ (GRD DC)* .5 V/cm
.5 μs/cm

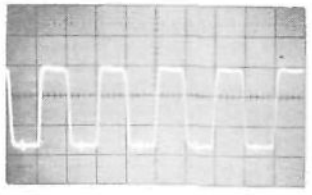

❷ (GRD Y1 CASE)
.5 V/cm, .5 μs/cm

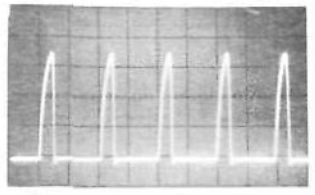

❸ 1 V/cm, .5 ms/cm

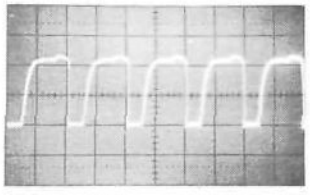

❹ 2 V/cm, .5 μs/cm

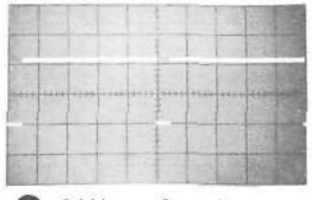

❺ 2 V/cm, .2 ms/cm

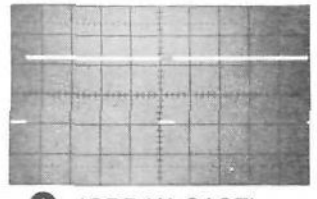

❻ (GRD Y1 CASE)
2 V/cm, 2 ms/cm

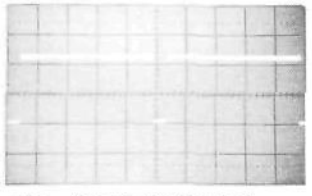

❼ (GRD Y1 CASE)
2 V/cm, .2 s/cm

*Oscilloscope.

DC coupled ground as noted.

5065A: Normal operation unless noted.

Oscilloscpe: DC coupled.

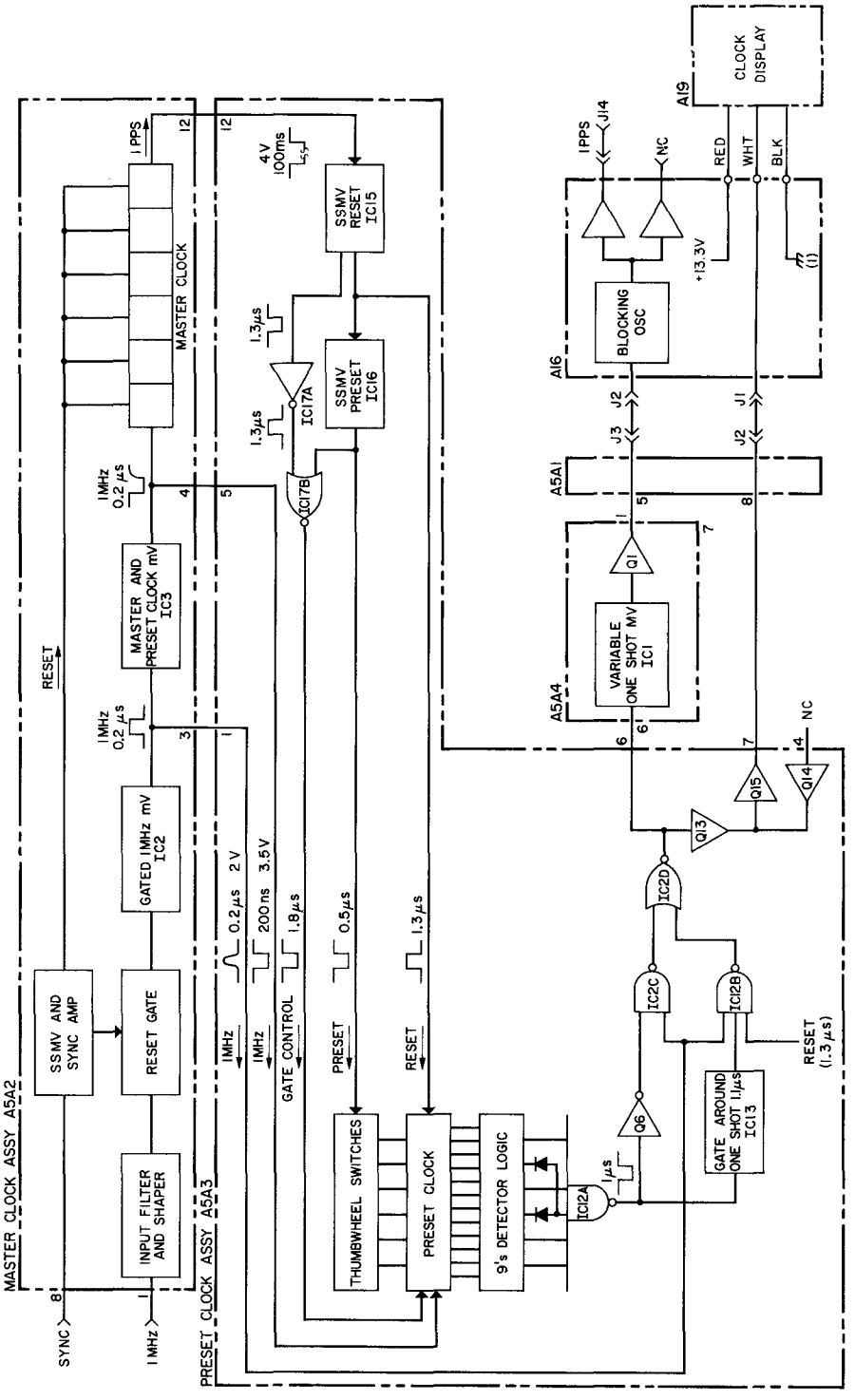

Figure 8-14
A5A2 MASTER CLOCK BOARD (OPTION 001)
(Sheet 2 of 3)

(See Page 8-35)

NOTES

1. REFERENCE DESIGNATIONS WITHIN THIS ASSEMBLY ARE ABBREVIATED. ADD ASSEMBLY NUMBER TO ABBREVIATION FOR COMPLETE DESCRIPTION.
2. UNLESS OTHERWISE INDICATED:
   RESISTANCE IN OHMS;
   CAPACITANCE IN PICOFARADS;
   INDUCTANCE IN MICROHENRIES
3. ASTERISK (*) INDICATES SELECTED COMPONENT, AVERAGE VALUES SHOWN.

REFERENCE DESIGNATIONS

A5	A5A2
S2	C 1-13 CR 1-11 IC 1-14 L 1-3 Q 1-7 R 1-46 T 1,2 Y 1

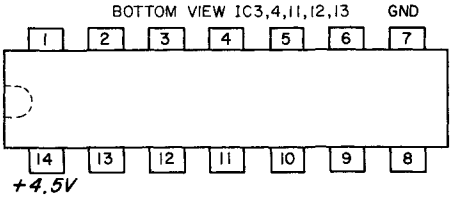

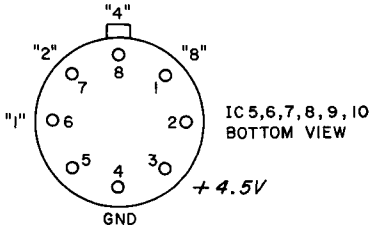

IC 5,6,7,8,9,10
BOTTOM VIEW

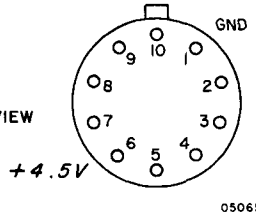

IC1,2
BOTTOM VIEW

05065-D-12

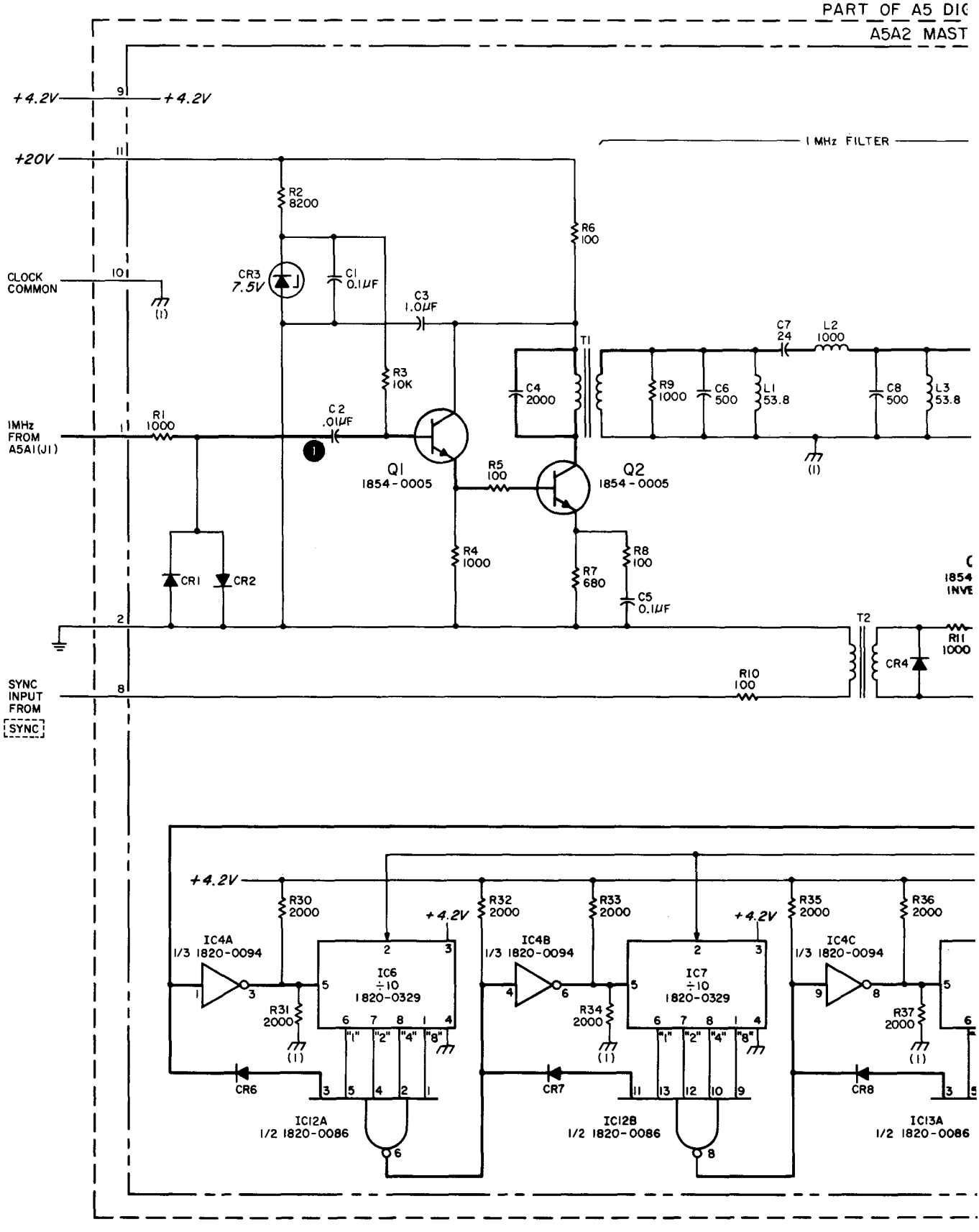
+4.2V
9
+4.2V
+20V
11
1 MHz FILTER
R2
8200
R6
100
CLOCK
COMMON
10
CR3
7.5V
C1
0.1μF
C3
1.0μF
C7
24
L2
1000
T1
(1)
R3
10K
C4
2000
R9
1000
C6
500
L1
53.8
C8
500
L3
53.8
1MHz
FROM
A5A1(J1)
1
R1
1000
C2
.01μF
Q1
1854-0005
R5
100
Q2
1854-0005
(1)
R4
1000
R8
100
R7
680
C5
0.1μF
CR1
CR2
2
T2
R11
1000
CR4
SYNC
INPUT
FROM
SYNC
8
R10
100
+4.2V
R30
2000
IC4A
1/3 1820-0094
IC6
÷10
1820-0329
R31
2000
(1)
"1"
"2"
"4"
"8"
CR6
IC12A
1/2 1820-0086
+4.2V
R32
2000
R33
2000
IC4B
1/3 1820-0094
IC7
÷10
1820-0329
R34
2000
(1)
CR7
IC12B
1/2 1820-0086
+4.2V
R35
2000
R36
2000
IC4C
1/3 1820-0094
R37
2000
(1)
CR8
IC13A
1/2 1820-0086

PART OF A5 DIGITAL DIVIDER ASSEMBLY (05065-6084) (NOTE 1) SERIES 1904

A5A2 MASTER CLOCK BOARD ASSEMBLY (05061-6014) SERIES 1840

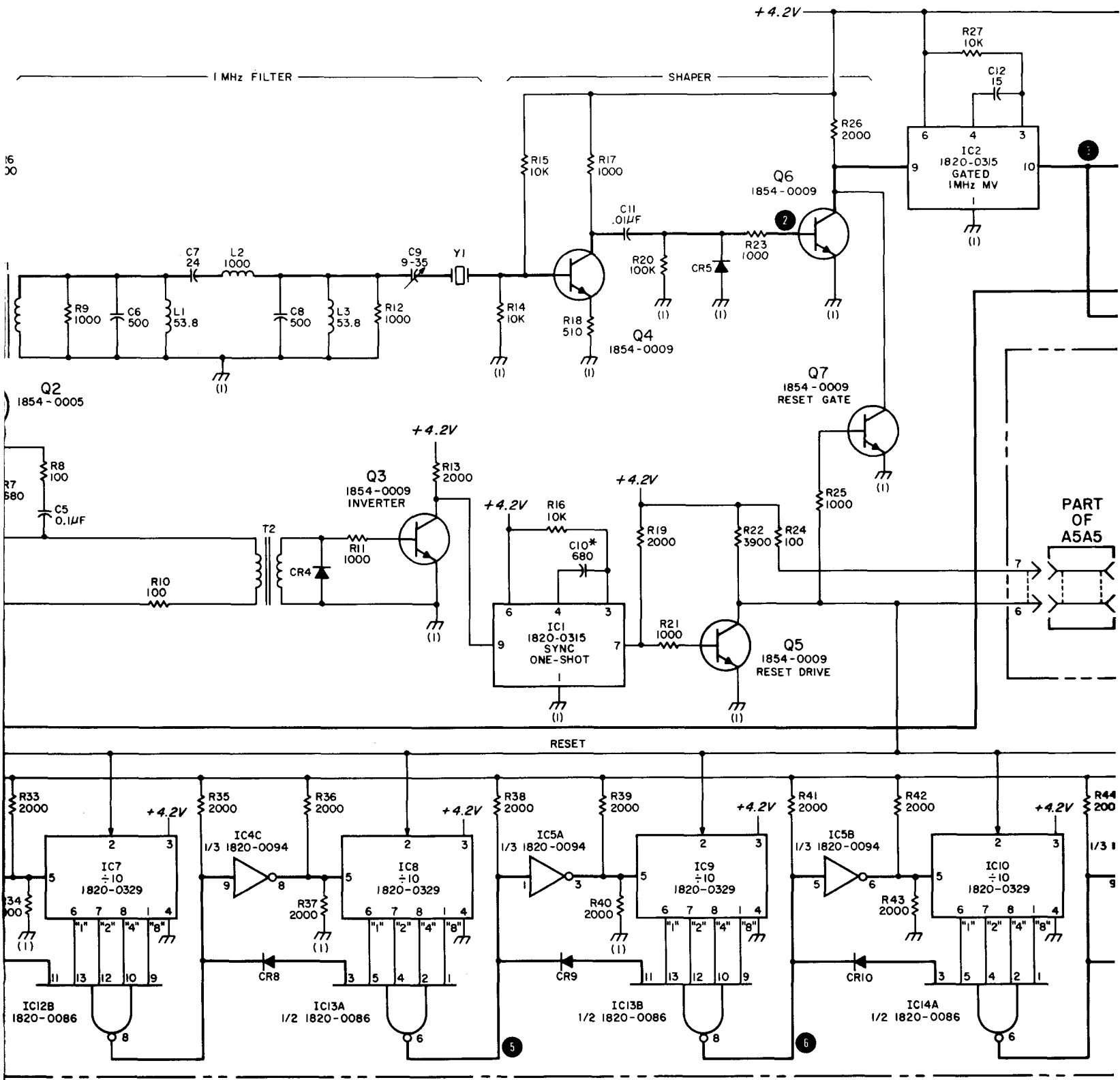

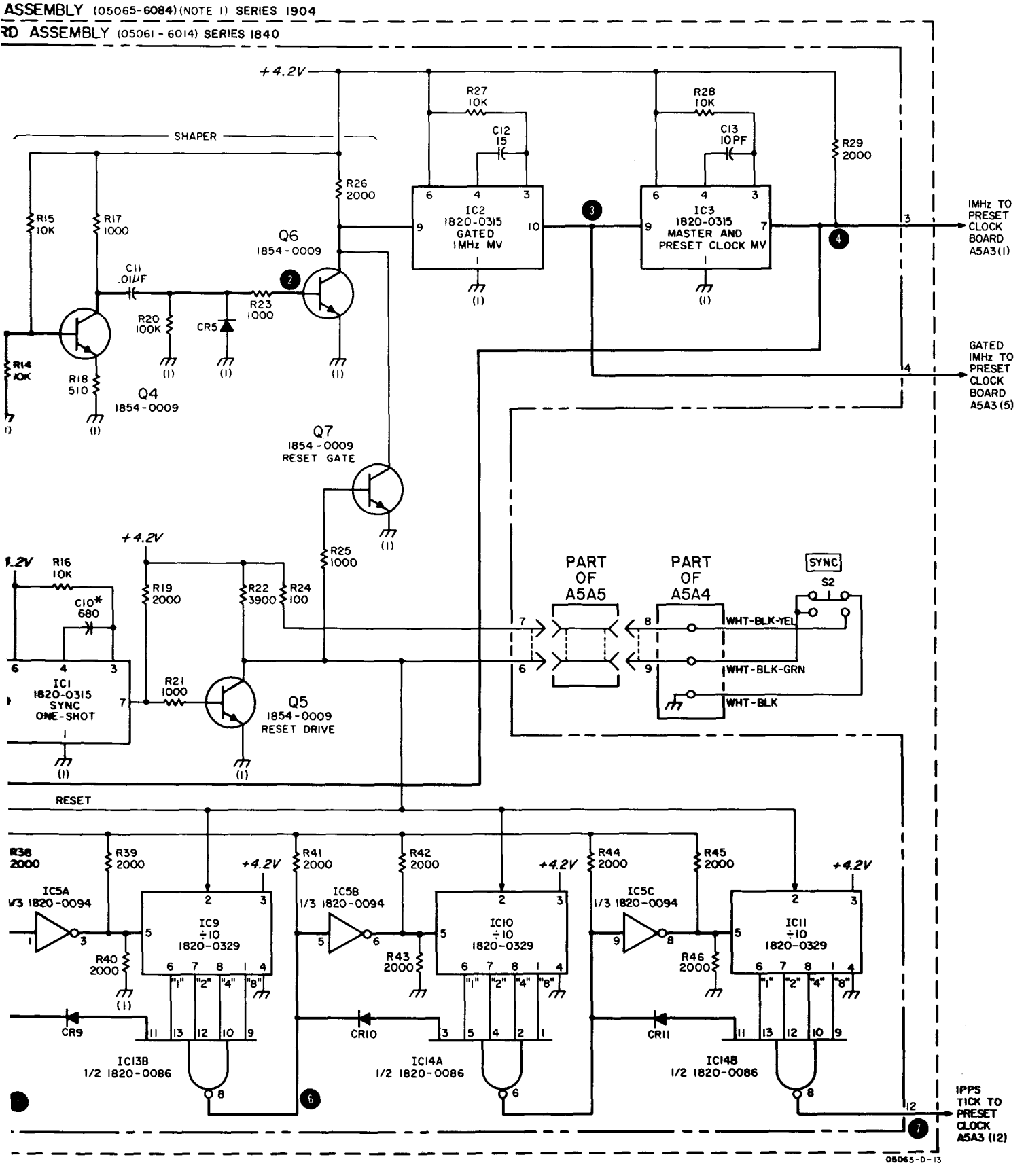

Figure 8-14. A5A2 Master Clock Board (Option 001)
(Sheet 2 of 3)

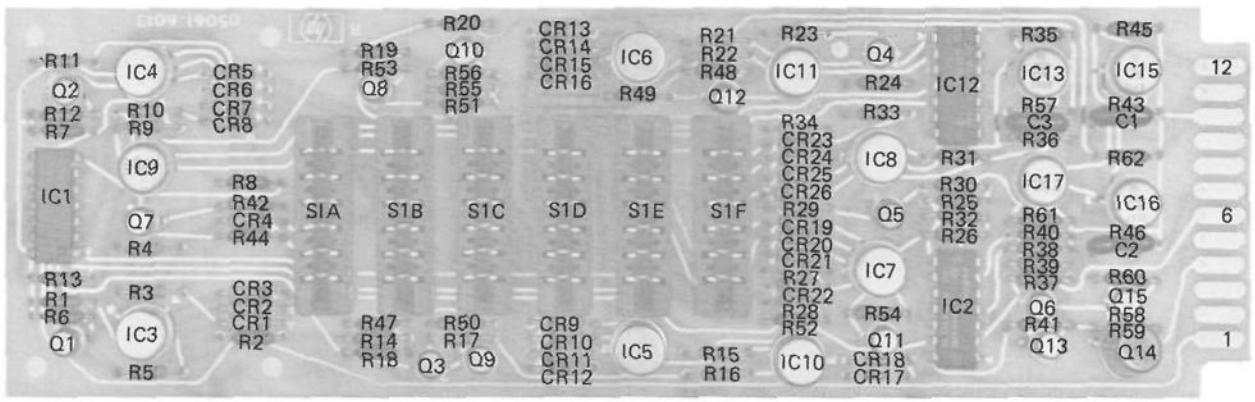

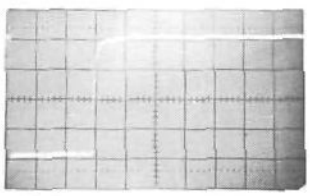

8 1 V/cm, 1 µs/cm

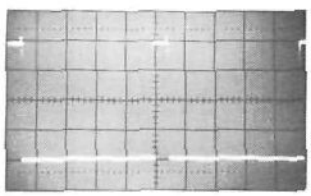

9 1 V/cm, 20µs/cm

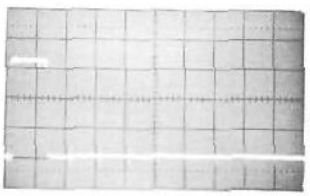

10 .5 V/cm, 1 µs/cm

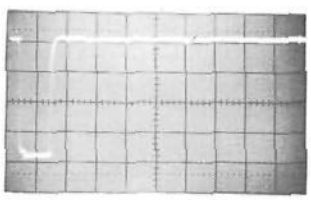

11 1 V/cm, .5 µs/cm

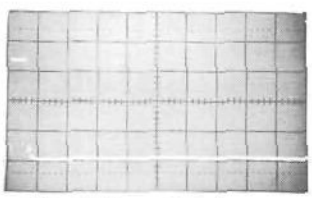

12 .5 V/cm, 2 µs/cm

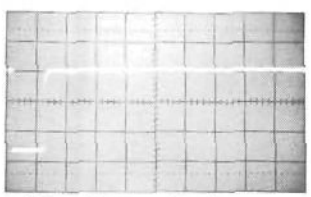

13 1 V/cm, 1 µs/cm

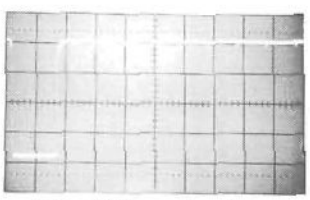

14 1 V/cm, 1 µs/cm

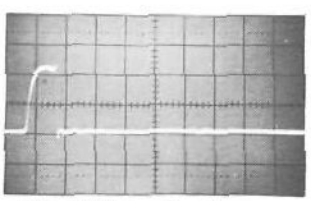

15 1 V/cm, .2 µs/cm

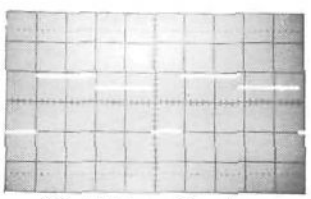

16 1 V/cm, .2 µs/cm

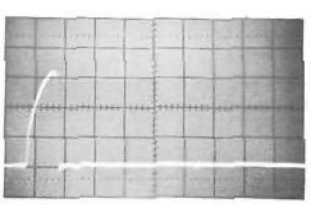

17 1 V/cm, .2 µs/cm

5065A: Normal operation unless noted.

Oscilloscope: DC coupled

Figure 8-15
A5A3 PRESET CLOCK BOARD (OPTION 001)
(Sheet 3 of 3)

(See Page 8-37)

NOTES

1. REFERENCE DESIGNATIONS WITHIN THIS ASSEMBLY ARE ABBREVIATED. ADD ASSEMBLY NUMBER TO ABBREVIATION FOR COMPLETE DESCRIPTION.
2. UNLESS OTHERWISE INDICATED:
   RESISTANCE IN OHMS;
   CAPACITANCE IN PICOFARADS;

REFERENCE DESIGNATIONS

A5A3
C1-3 CR1-26 IC1-17 Q1-15 R1-62 S1

SWITCH LOGIC FOR PRESET SWITCHES S1 THRU S6

		PRESET SWITCH POSITION									
		0	1	2	3	4	5	6	7	8	9
COMMON (C) CONNECTED TO	1	▲		▲		▲		▲		▲	
	2			▲	▲			▲	▲		
	4			▲	▲	▲	▲				
	8	▲	▲								

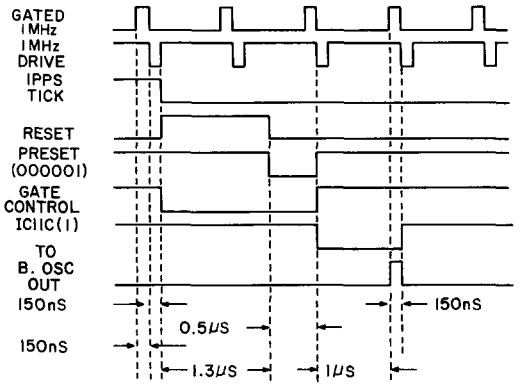

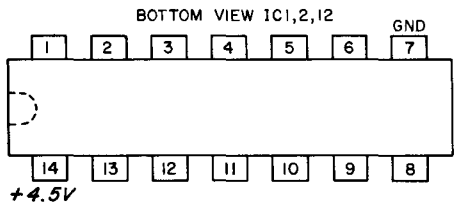

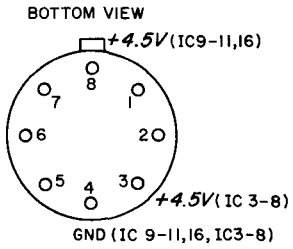

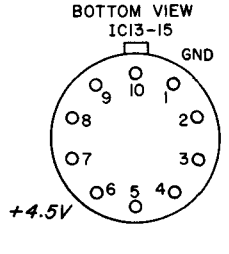

05065-D-14

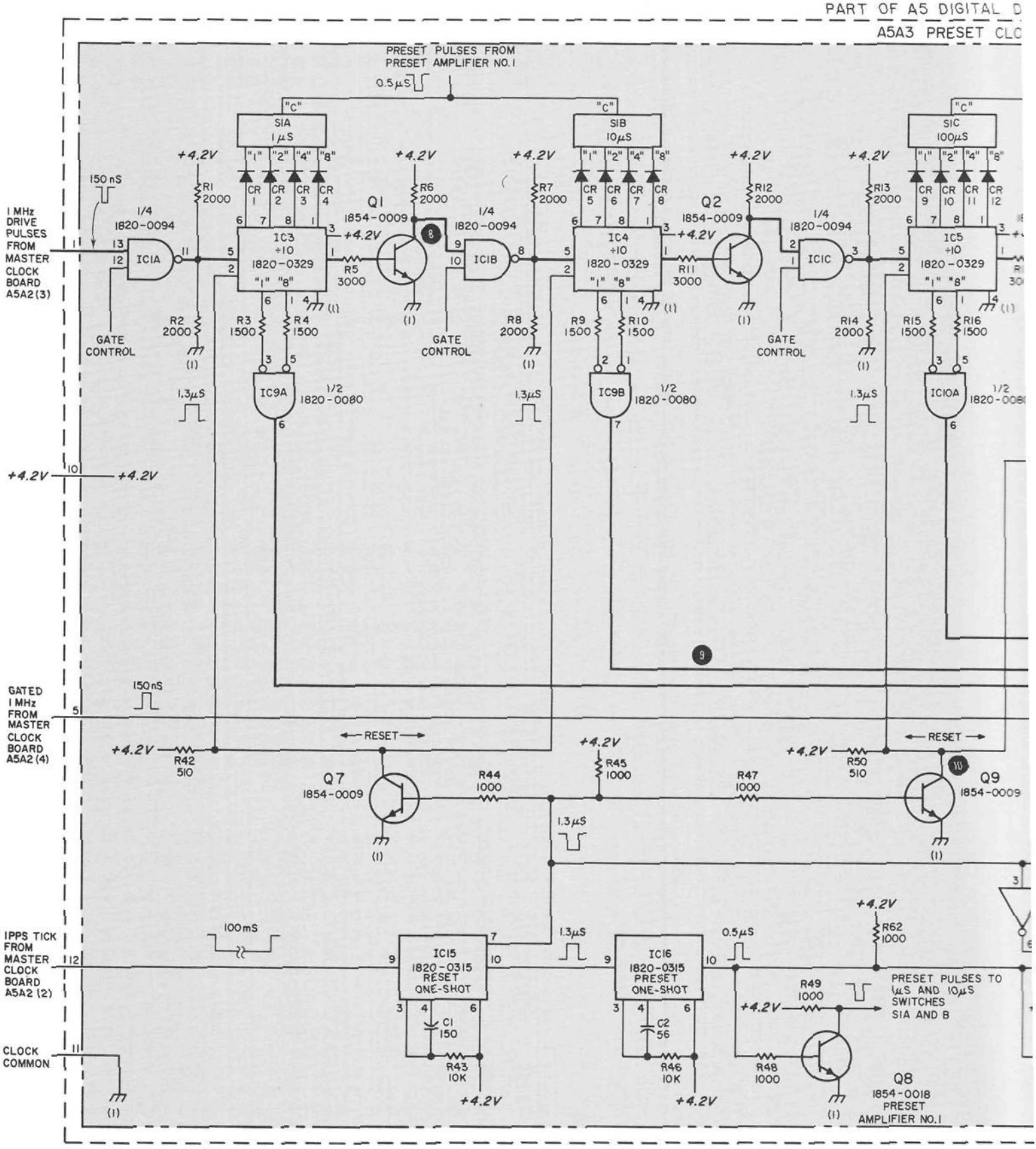
PART OF A5 DIGITAL
A5A3 PRESET CLO
PRESET PULSES FROM PRESET AMPLIFIER NO. 1
0.5µS
SIA 1µS
SIB 10µS
SIC 100µS
"C"
"1" "2" "4" "8"
CR 1 CR 2 CR 3 CR 4
CR 5 CR 6 CR 7 CR 8
CR 9 CR 10 CR 11 CR 12
+4.2V
150 nS
1 MHz DRIVE PULSES FROM MASTER CLOCK BOARD A5A2 (3)
R1 2000
R2 2000
R3 1500
R4 1500
R5 3000
R6 2000
R7 2000
R8 2000
R9 1500
R10 1500
R11 3000
R12 2000
R13 2000
R14 2000
R15 1500
R16 1500
Q1 1854-0009
Q2 1854-0009
1/4 1820-0094
IC1A
IC3 ÷10 1820-0329
IC4 ÷10 1820-0329
IC5 ÷10 1820-0329
"1" "8"
GATE CONTROL
IC9A 1/2 1820-0080
IC9B 1/2 1820-0080
IC10A 1/2 1820-0080
1.3µS
GATED 1 MHz FROM MASTER CLOCK BOARD A5A2 (4)
RESET
R42 510
R44 1000
R45 1000
R47 1000
R50 510
Q7 1854-0009
Q9 1854-0009
IPPS TICK FROM MASTER CLOCK BOARD A5A2 (2)
100 mS
IC15 1820-0315 RESET ONE-SHOT
IC16 1820-0315 PRESET ONE-SHOT
C1 150
C2 56
R43 10K
R46 10K
0.5µS
R62 1000
R49 1000
R48 1000
PRESET PULSES TO 1µS AND 10µS SWITCHES SIA AND B
Q8 1854-0018 PRESET AMPLIFIER NO. 1
CLOCK COMMON
(1)

PART OF A5 DIGITAL DIVIDER ASSEMBLY (05065-6084 (NOTE 1) SERIES 1904

A5A3 PRESET CLOCK BOARD ASSEMBLY (05061-6013) SERIES 1840

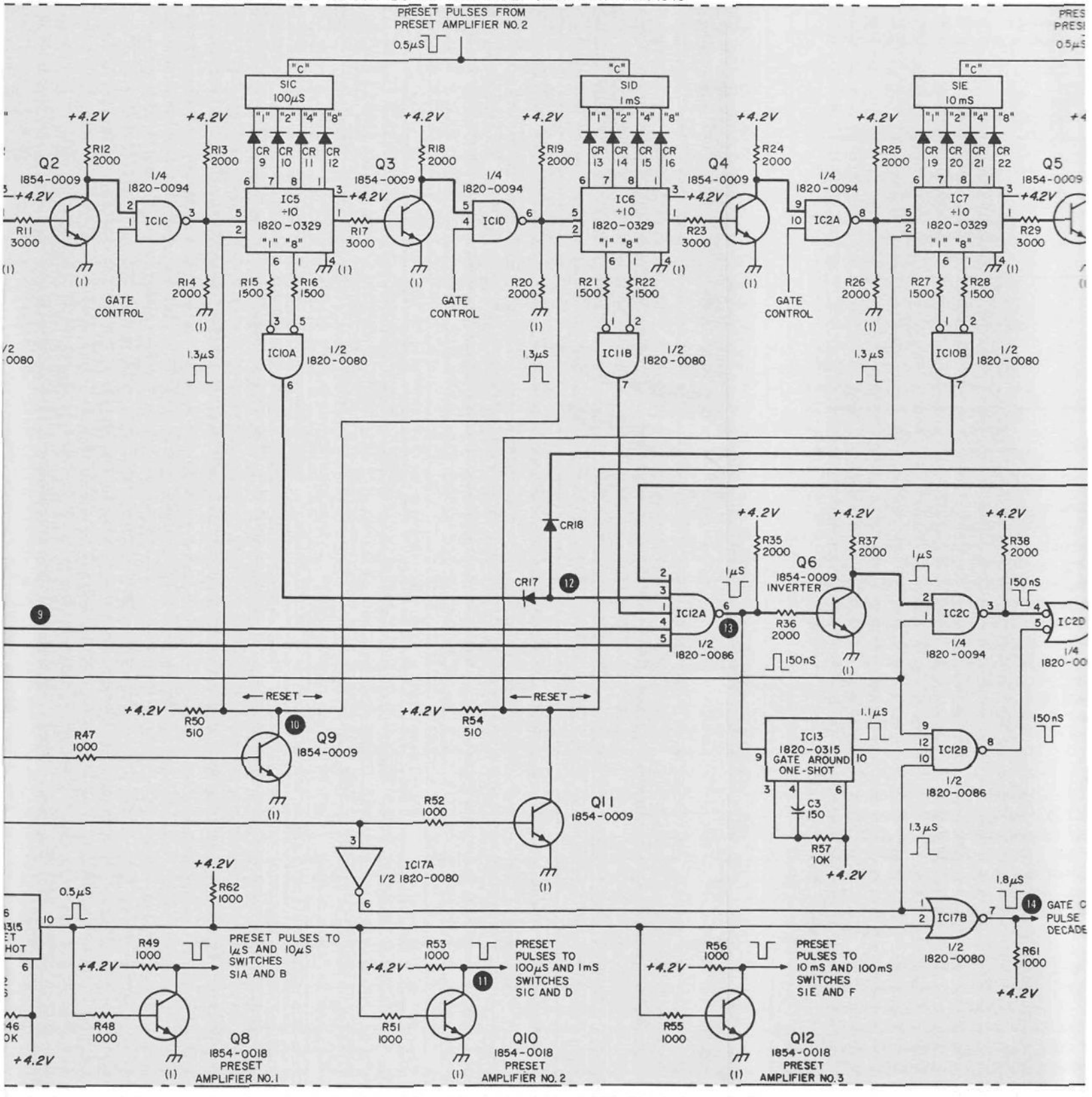

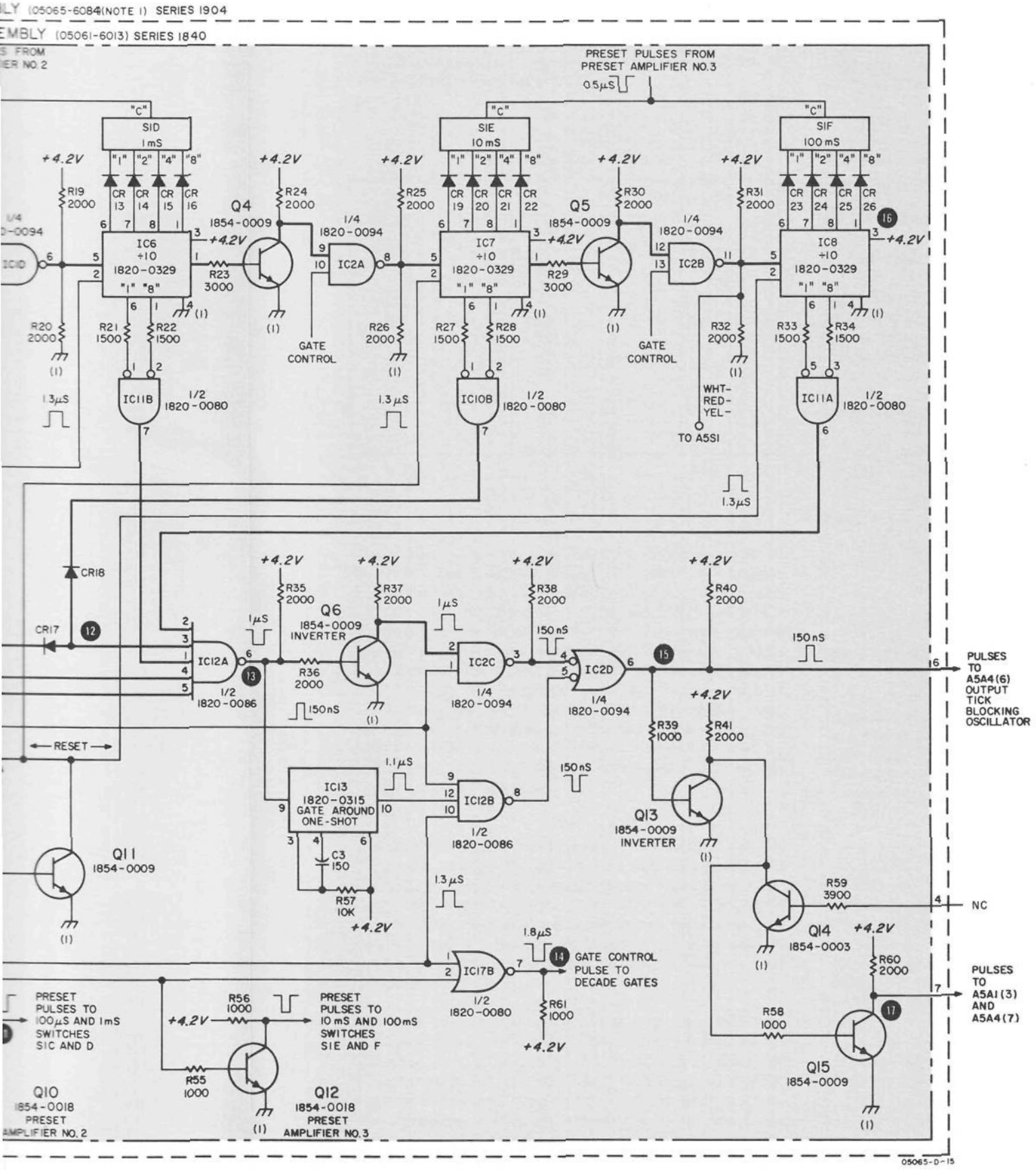

Figure 8-15. A5A3 Preset Clock Board (Option 001)
(Sheet 3 of 3)

1 MHz FREQUENCY DIVIDER A6 THEORY

The A6 module uses regenerative division to divide 5 MHz to 1 MHz as shown in Number 4.

1 MHz Regenerative Divider

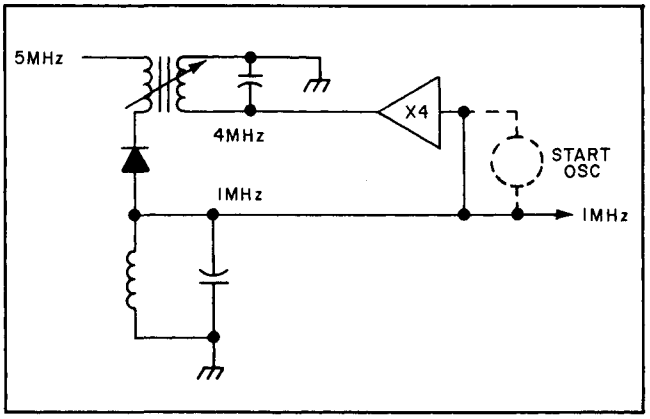

The 1 MHz divider is a regenerative divide-by-5 circuit followed by an amplifier stage. This assembly includes signal-sensing logic circuitry to control the divider-start circuits. Assume the 5 MHz signal from A10 Oscillator Assembly is present at the divider circuit input, but the 1 MHz output has not started. Producing the 1 MHz output requires a 1 MHz signal at the base of X4 Multiplier Q4 (this 1 MHz signal is derived from the output signal once the divider starts). Prior to divider start, the required 1 MHz signal is obtained by converting the tuned-amplifier circuit of Q6 into a 1 MHz oscillator by feeding a signal from its output back to its input through field-effect transistor Q5.

The 5 MHz signal input to A6 is amplified by Q1. Capacitive voltage divider C5, C6 couples a portion of Q1 output to the start-circuit detector stage of CR1, CR2, Q2, and Q3. With the START/AUTO-START switch completing a signal path to Q5 base with this switch in either position, the detector stage biases Q5 "on" to complete the feedback path for Q6 which then oscillates at 1 MHz.

Multiplier stage Q4 converts 1 MHz at its base to 4 MHz in its tuned collector circuit. The resulting 4 MHz mixes with the input 5 MHz from T1 in mixing diode CR4. The parallel resonance of L2 and C11 tuned to 1 MHz, traps all undesired frequencies in the mixing product. The remaining 1 MHz couples to Q6 to complete the regenerative feedback path. Sustained regenerative oscillation produces 1 MHz which is amplified by Q8 and Q9. This 1 MHz output is also rectified by CR7 and filtered by C28, R35, and C29 for a dc output to the 1 MHz position of the CIRCUIT CHECK meter.

The 1 MHz output also couples to the start-circuit detector stage of CR5, CR6, and Q7 which sends a dc start signal to start amplifier Q3 for automatic start action with the START/AUTO START switch at AUTO START.

The 1 MHz output to A4 100 kHz Frequency Divider is coupled through C16 from Q6.

A6 MAINTENACE

NORMAL OPERATION

The A6 circuits produce 1 MHz outputs derived by regenerative division of 5 MHz. The A6 Assembly is placed in operation either by placing the START-AUTO START switch in the START position, or by leaving this switch in the AUTO START position whereupon the A6 will start divising 5 MHz when it is applied. A6 outputs are as follows:

a. 1 MHz to front and rear 1 MHz jacks from A6(15).

b. Rectified 1 MHz output to CIRCUIT CHECK meter from A6(12).

c. 1 MHz output to A4(6) from A6(9).

OPERATIONAL CHECK

a. A simple check of A6 operation can be done by observing the CIRCUIT CHECK 1 MHz indication and comparing it with the reference meter readings on the front-panel door. Checking the 100 kHz meter reading will verify that the A6 Assembly is delivering 1 MHz for division to 100 kHz in the A4 100 kHz Frequency Divider.

b. To check operation of the START AUTO-START switch, set this switch at the center-off position and momentarily disconnect A10J4. Note that with the top cover removed, A10J4 is accessible. Without a 5 MHz input to A6, there should be no A6 1 MHz output (or a dc start signal to A4). With A10J4 reconnected, there should be no 1 MHz output until the START AUTO-START switch is placed at either START or AUTO-START.

c. To verify that the 1 MHz output is within specifications, proceed as follows:

1) Using the 5065A 5 MHz output as an external time base input to a counter, connect the 1 MHz front-panel jack to the counter and check for 1 MHz ± 1 count. Disconnect the counter.

2) Connect the front-panel 1 MHz jack through a 50-ohm feedthru to an RF voltmeter. Check for 1.0 to 1.5 volts rms. Disconnect the voltmeter and connect an oscilloscope in its place. Check that the 1 MHz output is a clean undistorted sine wave. Disconnect the oscilloscope.

3) If a distortion check of the 1 MHz output is desired, refer to steps 4 and 5 of Table 5-2, In-Cabinet Performance Check.

TROUBLESHOOTING AND REPAIR

NOTE

For troubleshooting or tuning, the A6 Assembly should be mounted on a HP 05065-6064 board extender. Power should be disconnected before this assembly is removed or reinstalled.

a. Signal Checks

1) To check Q1, Monitor 5 MHz at CR4.

2) To check Q4, disconnect A10J4 to remove 5 MHz and inject 1 MHz (1.0 volts rms) at the junction of R14 and R15. Then check for 4 MHz (1 MHz X4) at CR4. If this checks out, leave the 1 MHz connected, re-establish the 5 MHz connection, and check for a difference 1 MHz CR4 output at the junction of R16 and R18. If everything checks out so far and there is no regenerative division, look for a malfunction in the start circuit of Q5 and Q6. In case the dc start circuit is not working, the start oscillator can be turned on by grounding R8 at pin 6 to close Q5 switch.

b. Tuning Adjustments

1) Connect a 50-ohm termination to the rear panel 1 MHz output jack.

2) Connect a BNC tee to the front panel 1 MHz output jack. Then connect a counter and RMS voltmeter to the BNC tee. Connect the 5065A 5 MHz output to counter EXT STD INPUT and set counter for external standard operation.

3) Set front panel START AUTO-START switch at AUTO START.

4) Tune T1, T2, T3, and C21 for maximum indication on the RMS voltmeter. Counter should indicate 1 MHz ± 1 count.

5) Carefully retune A6, T1, T2, T3, and C21 for maximum output. Output level should be between 1.0 and 1.5 volts. This completes the 1 MHz divider tuning.

MODULE REPLACEMENT

When replacing the A6 Assembly after repair or when a new A6 Assembly is installed, the instrument should be completely realigned per the preceeding paragraphs.

Figure 8-16
A6 1 MHz FREQUENCY DIVIDER ASSEMBLY

(See Page 8-41)

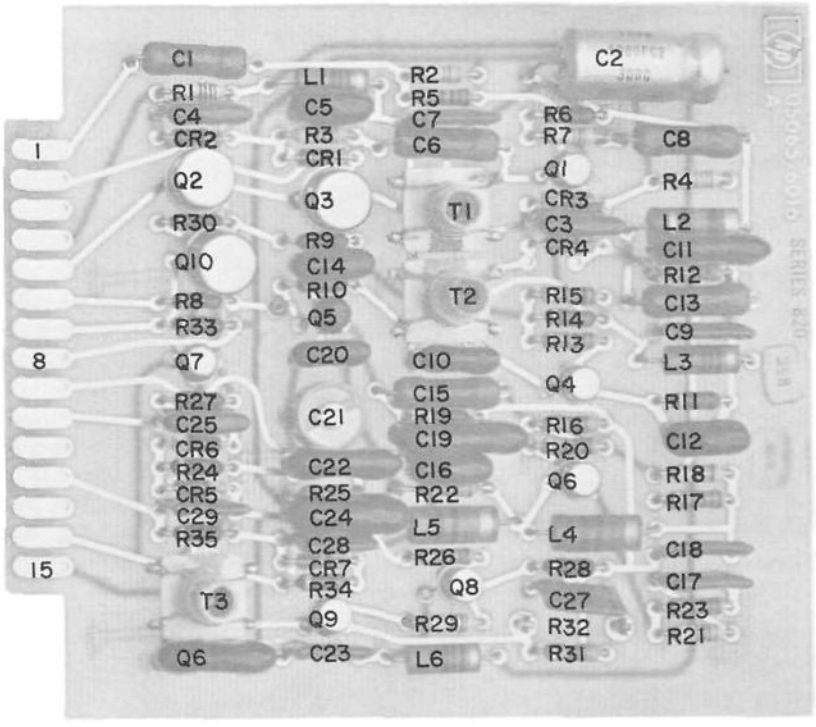

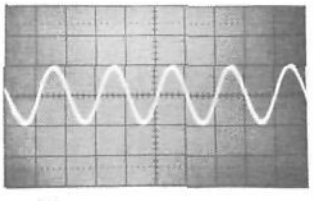

❶ .1 V/cm, .1 μs/cm

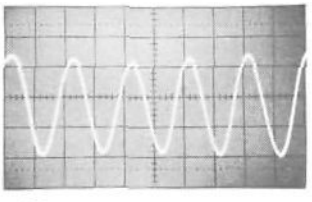

❷ 1 V/cm, .1 μs/cm

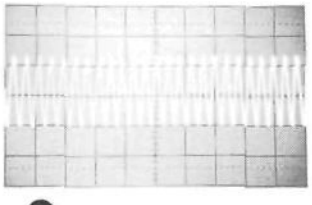

❸ .5 V/cm, .5 μs/cm
(DIVIDER INOPERATIVE)

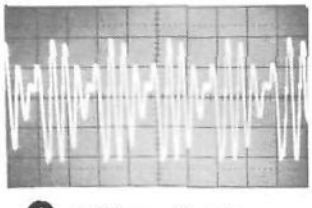

❹ .5 V/cm, .5 μs/cm
(DIVIDER OPERATIVE)

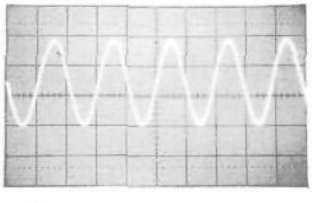

❺ 2 V/cm, .5 μs/cm

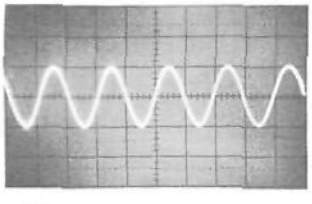

❻ 2 V/cm, .5 μs/cm

5065A: Normal operation unless noted.

Oscilloscope: DC coupled

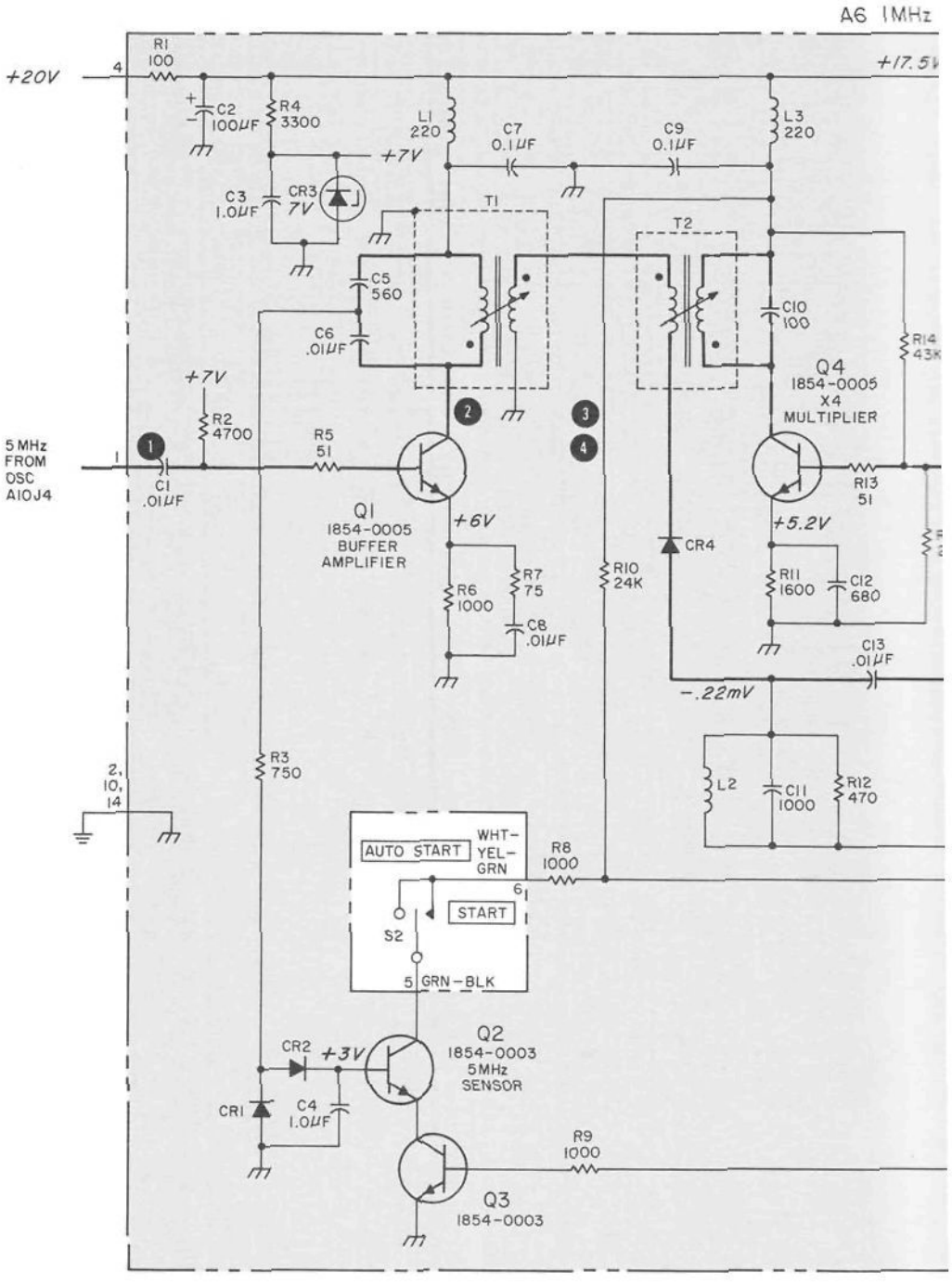

NOTES

1. REFERENCE DESIGNATIONS WITHIN THIS ASSEMBLY ARE ABBREVIATED. ADD ASSEMBLY NUMBER TO ABBREVIATION FOR COMPLETE DESCRIPTION.
2. UNLESS OTHERWISE INDICATED:
   RESISTANCE IN OHMS;
   CAPACITANCE IN PICOFARADS;
   INDUCTANCE IN MICROHENRIES
3. ASTERISK (*) INDICATES SELECTED COMPONENT, AVERAGE VALUES SHOWN.

A6 1MHz FREQUENCY DIVIDER ASSEMBLY (05065-6016) (NOTE 1)

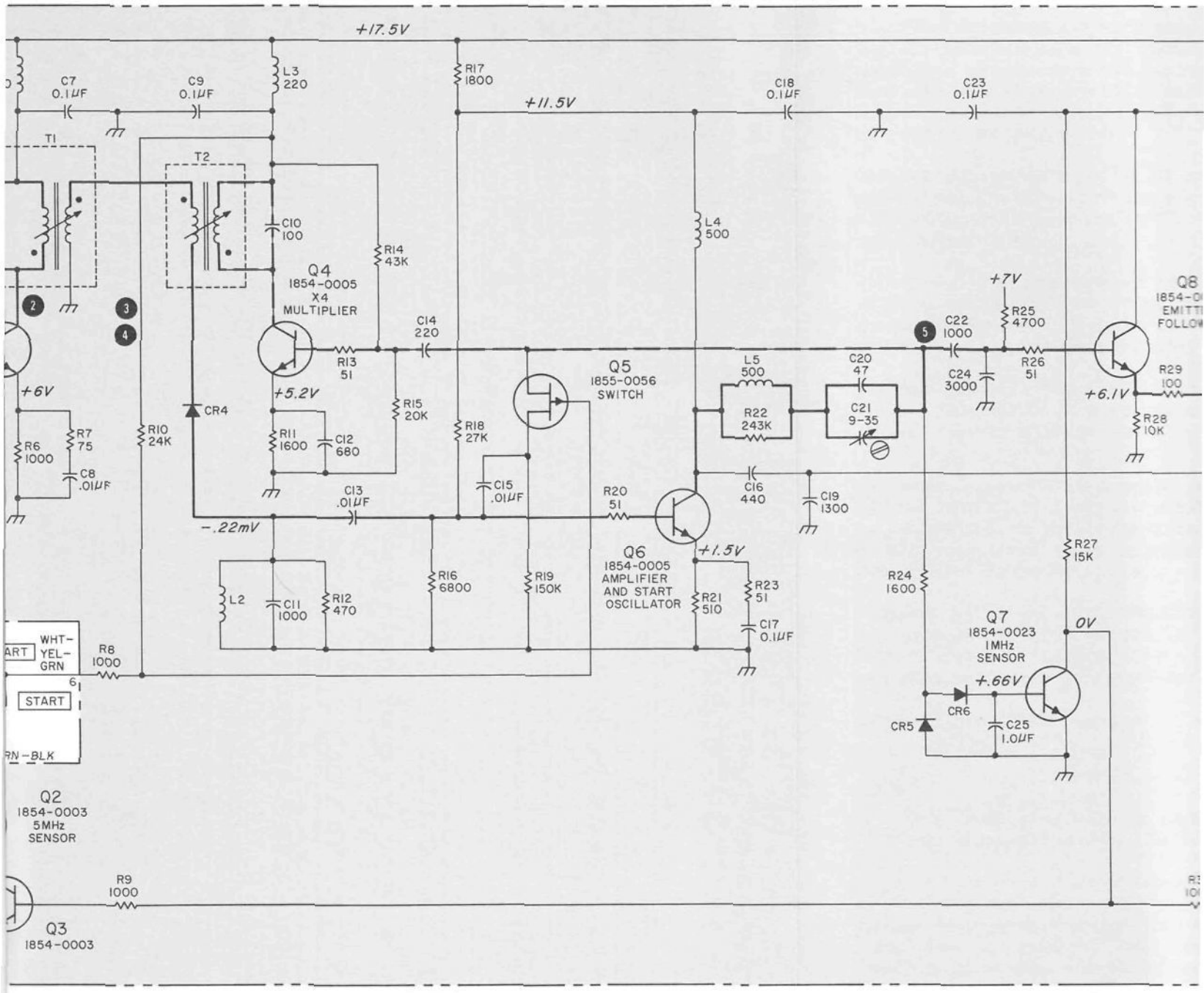

NOTES

DESIGNATIONS WITHIN THIS
ARE ABBREVIATED. ADD
NUMBER TO ABBREVIATION
ETE DESCRIPTION.

HERWISE INDICATED:
CE IN OHMS;
NCE IN PICOFARADS;
CE IN MICROHENRIES

) INDICATES SELECTED
AVERAGE VALUES SHOWN.

REFERENCE DESIGNATIONS

NO PREFIX	A6
S2	C1-29 CR1-7 L1-6 Q1-10 R1-35 T1-3

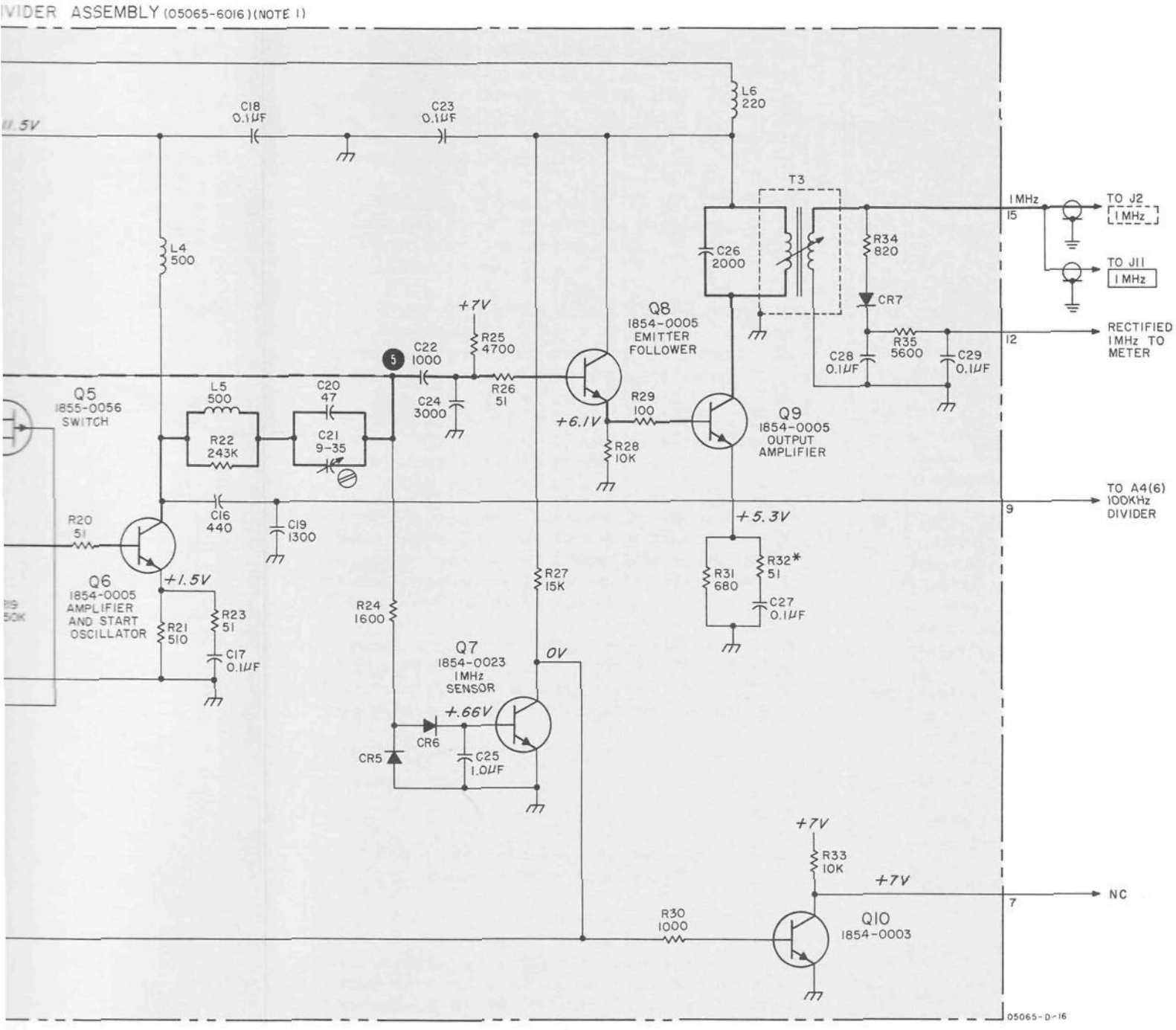

REFERENCE DESIGNATIONS

NO PREFIX	A6
S2	C1 - 29 CR1-7 L1-6 Q1-10 R1-35 T1-3

Figure 8-16. A6 1 MHz Frequency Divider Assembly

AC AMPLIFIER A7 THEORY

THEORY

A low-level signal from A12 RVFR assembly is applied to A7J1. The input signal to A7J1 contains the ac and dc components from the photo-detector inside the RVFR. The fundamental ac signal is 137 Hz and is proportional to the frequency error. A second-harmonic signal to 274 Hz is also present at A7J1 input.

The preamplifier consisting of Q1, Q2, and IC1 is a low noise dc amplifier with a zero bias adjustment (A7R3) A7R3 is adjusted for 0 Vdc bias at A7Q1(B) to minimize noise on the A7J1 input.

The signal at IC1(6) is sent through a 274 Hz notch-filter to emitter-follower Q5. The 274 Hz notch-filter, filters out the second harmonic component, and allows the 137 Hz fundamental signal to pass through to Q5 and IC2.

The amplified output from IC2(6) is routed to A8 Phase Detector. A portion of the IC2 output is sent through a 137 Hz notch-filter to Q6 and used as feedback to IC2.

A second output from IC1(6) is sent through level adjustment A7R29 to IC3. The output from IC3 goes through the rectifier network and emitter-follower Q9 to A17 terminal board where it may be monitored when M1 meter is in 2ND HARMONIC position.

Feedback around the 2ND HARMONIC amplifier is through the 274 Hz Notch-filter and Q7. Since the filter feeds back all frequencies but 274 Hz. The amplifier's gain is high at 274 Hz and low at all other frequencies.

OPERATIONAL CHECK

NOTE

This check need only be performed if trouble is suspected in the A7 Assembly.

a. A quick check of the A7 Assembly can be made by monitoring the output (yellow lead) with an oscilloscope. Remove the input cable from A7J1 and, using a small metal tool, touch the center conductor of A7J1. The "hum signal" thus induced will cause a saturated signal to appear on the oscilloscope. This maximum signal output will peg the CIRCUIT CHECK meter when switched to 2ND HARMONIC.

b. A more precise test can be made using the following procedure.

1) Set up equipment as shown in A7 Test Setup. Use Micon-to-BNC test cable that is supplied, for the connection to A7J1.

2) Set oscillator frequency to 137 Hz and output level to .5 V peak-to-peak.

A7 Test Setup

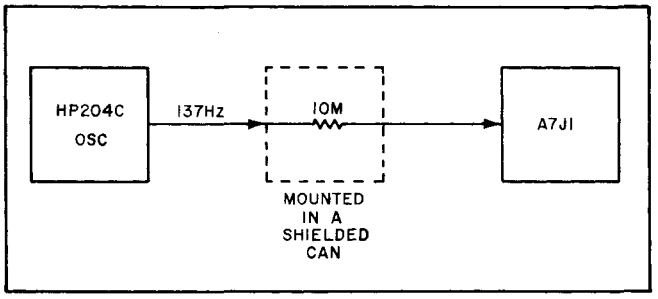

3) Connect oscilloscope to A7TP2 or A7WBB. Output should be about .9 V peak-to-peak.

4) Connect oscilloscope to A7 output (Yellow lead). Signal gain can be varied from zero to the point where the amplifier clips at about 16 V peak-to-peak by varying R17. With R17 set for proper loop gain, the A7 output signal will be roughly 6-7 times the signal at A7TP2.

5) Set CIRCUIT CHECK meter switch to 2ND HARMONIC. Reduce oscillator output and allowing for a time lag, note the CIRCUIT CHECK meter response. Meter should follow oscillator level setting. This procedure checks the second harmonic detector circuit of the A7 Assembly.

6) Remove the test setup and oscilloscope connections. Using the Micon-to-BNC test cable provided, connect a dc voltmeter to A7J1. Dc voltage at this point should not exceed ± 5 mV. Excessive dc voltage at this point will result in a noisy solar cell (A12 RVFR Assembly) output. Adjust A7R3 to bring this voltage below ±5 mV if required.

7) Remove test cable and dc voltmeter. Reconnect cable from A12 Assembly to A7J1.

TROUBLESHOOTING AND REPAIR

a. If any components in the preamplifier circuit are replaced, connect a voltmeter to A7Q1 base and adjust A7R3 for less than 0.5 mV at this point.

b. After any repairs to A7 Assembly, adjust A7R17 as described in Section 5-30, LOOP GAIN ADJUSTMENT.

MODULE REPLACEMENT

If the A7 Assembly is replaced with either a repaired or new Assembly, set A7R3 as described in the preceding section TROUBLESHOOTING AND REPAIR. Also perform adjustments outlined in Paragraphs 5-27 to 5-31.

Figure 8-17
A7 AC AMPLIFIER ASSEMBLY

(See Page 8-43)

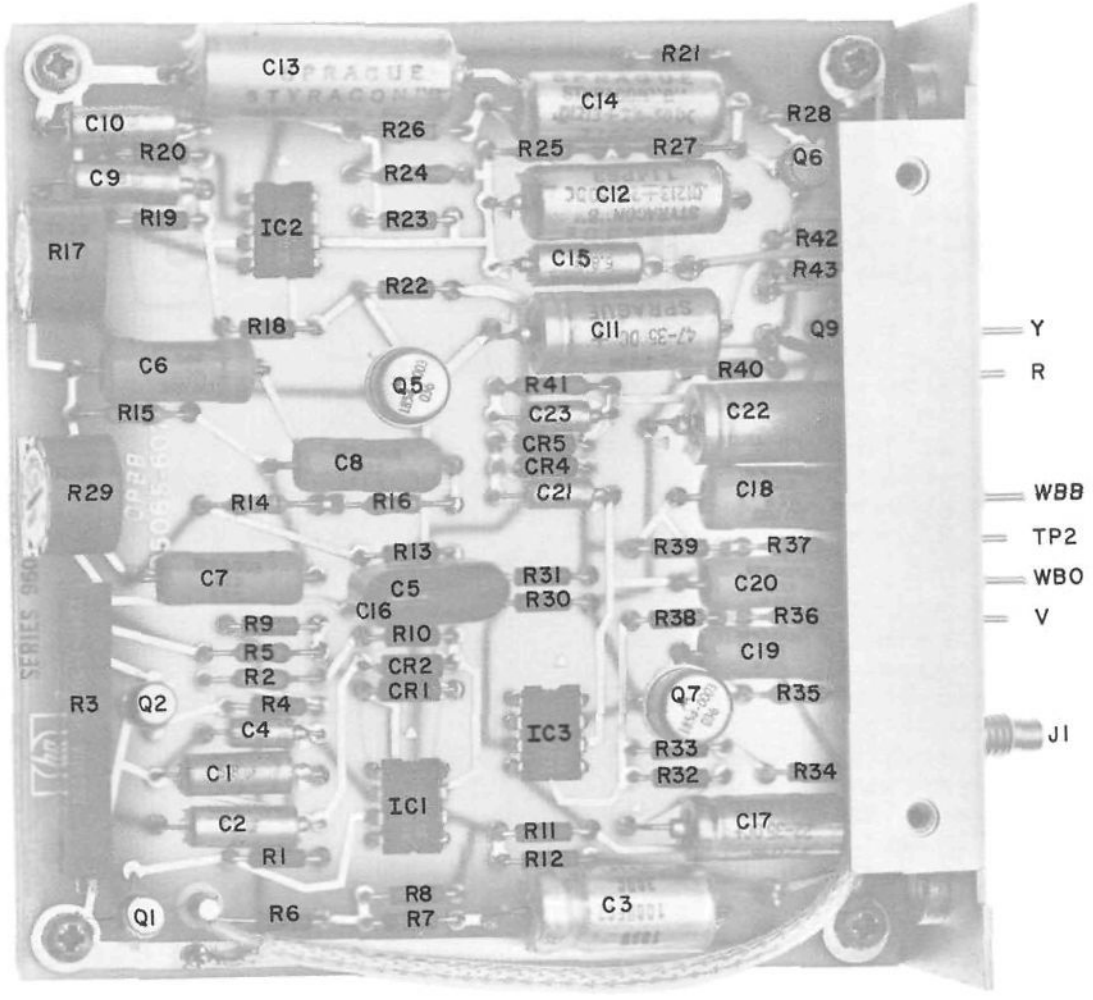
C13
R21
C14
C10
R26
R28
R20
R25
R27
Q6
C9
R24
C12
R19
IC2
R23
R42
R17
C15
R43
R22
R18
C11
Q9
Y
C6
Q5
R40
R
R41
R15
C23
C22
CR5
C8
CR4
R29
C21
C18
WBB
R14
R16
TP2
R13
R39
R37
C7
R31
C20
WBO
C5
R30
C16
R38
R36
V
R9
R10
C19
R5
CR2
R2
CR1
Q7
R35
R3
Q2
R4
IC3
C4
R33
J1
C1
R32
R34
IC1
C2
R11
C17
R1
R12
R8
Q1
R6
R7
C3

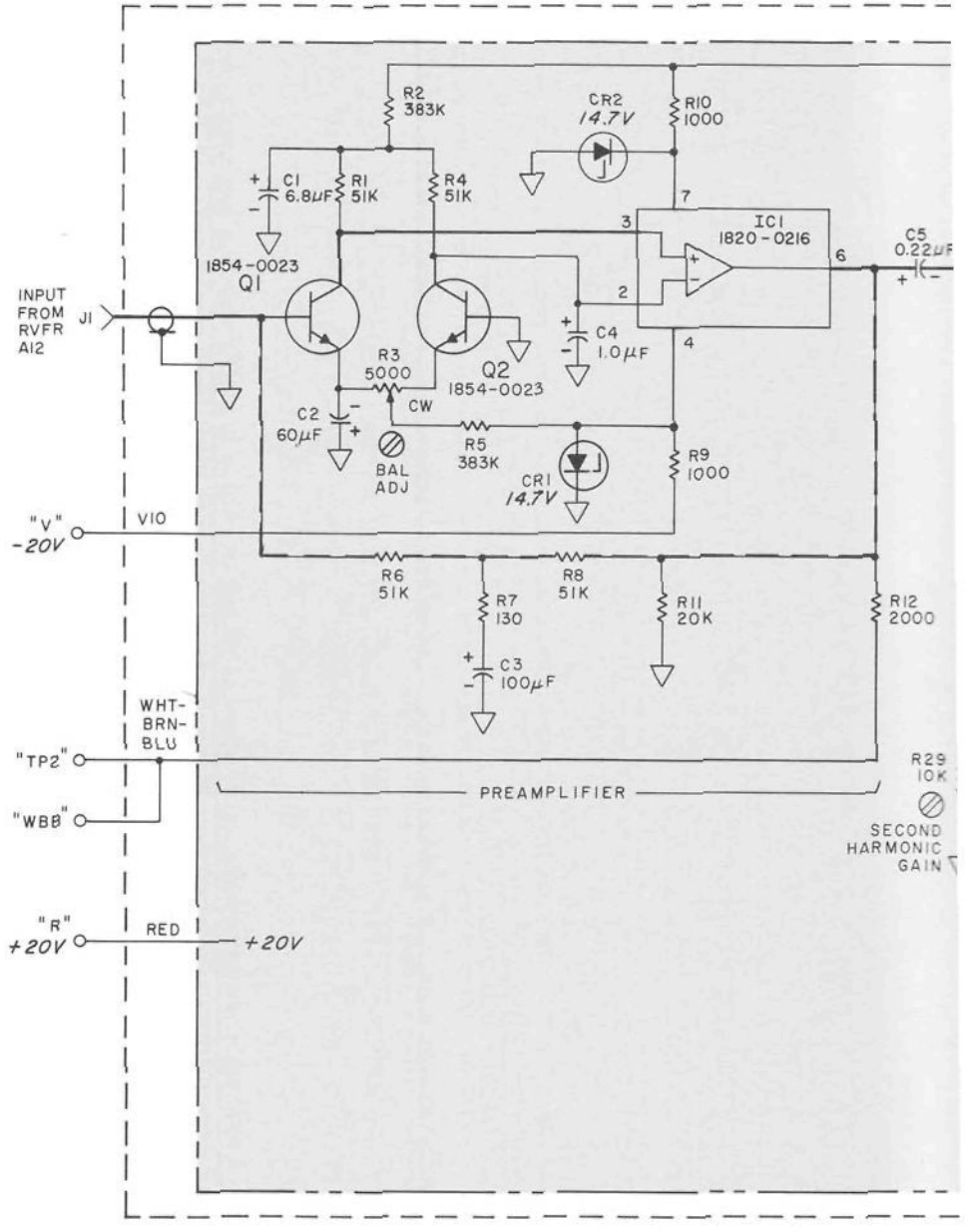

NOTES

1. REFERENCE DESIGNATIONS WITHIN THIS ASSEMBLY ARE ABBREVIATED. ADD ASSEMBLY NUMBER TO ABBREVIATION FOR COMPLETE DESCRIPTION.
2. UNLESS OTHERWISE INDICATED:
   RESISTANCE IN OHMS;
   CAPACITANCE IN PICOFARADS;

A7 AC AMPLIFIER ASSEMBLY (05065-6080) (NOTE 1) SERIES 820

A7A1 AC AMPLIFIER BOARD (05065-6079) SERIES 960

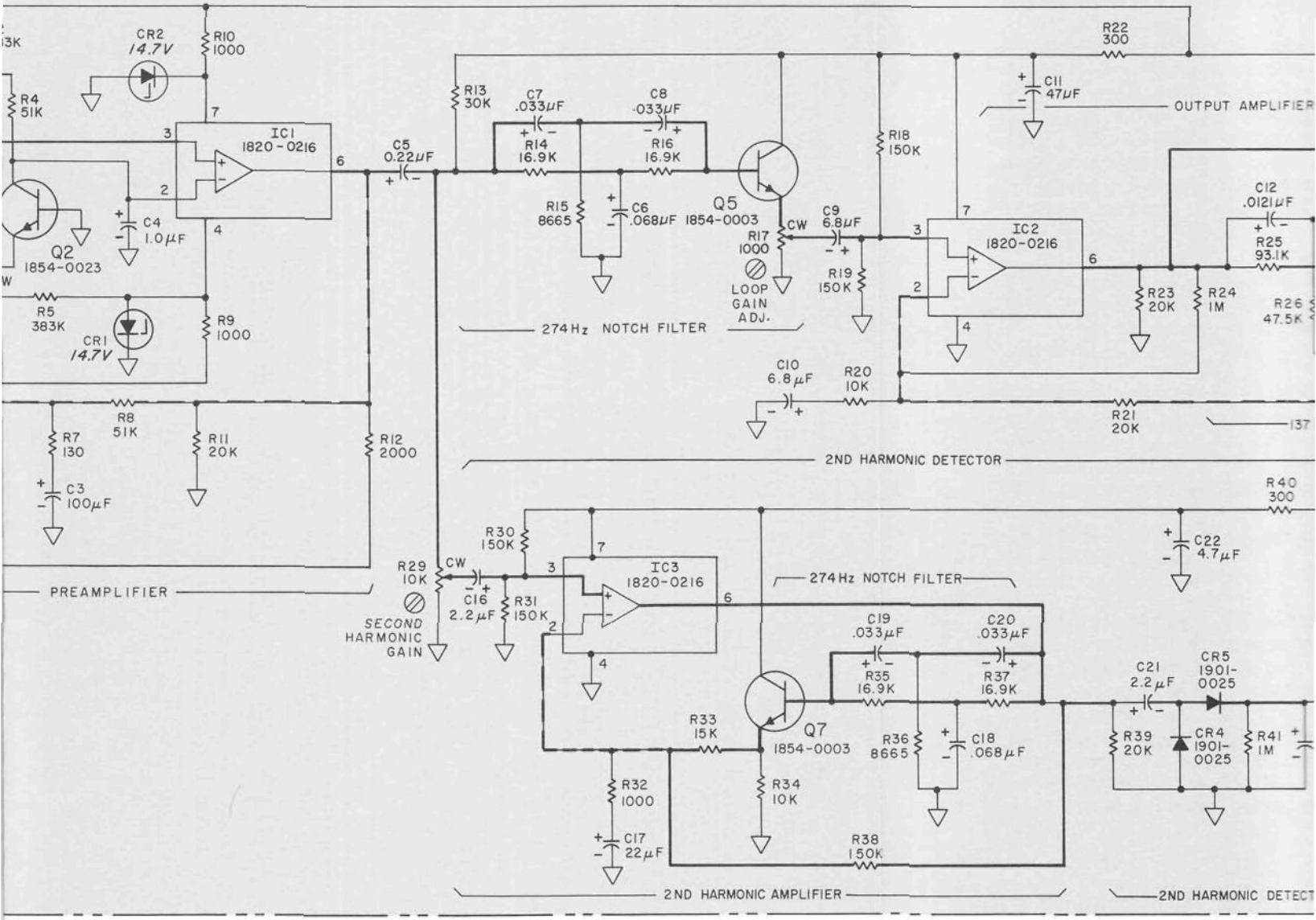

NOTES

1. REFERENCE DESIGNATIONS WITHIN THIS ASSEMBLY ARE ABBREVIATED. ADD ASSEMBLY NUMBER TO ABBREVIATION FOR COMPLETE DESCRIPTION.
2. UNLESS OTHERWISE INDICATED: RESISTANCE IN OHMS; CAPACITANCE IN PICOFARADS;

REFERENCE DESIGNATIONS

A7	A7A1
J1	C1-23 CR1,2,4,5 IC1-3 Q1,2,5-7,9 R1-43

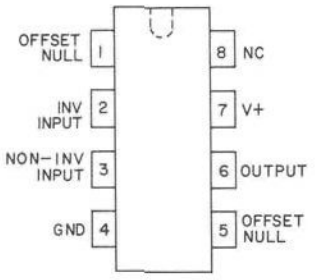

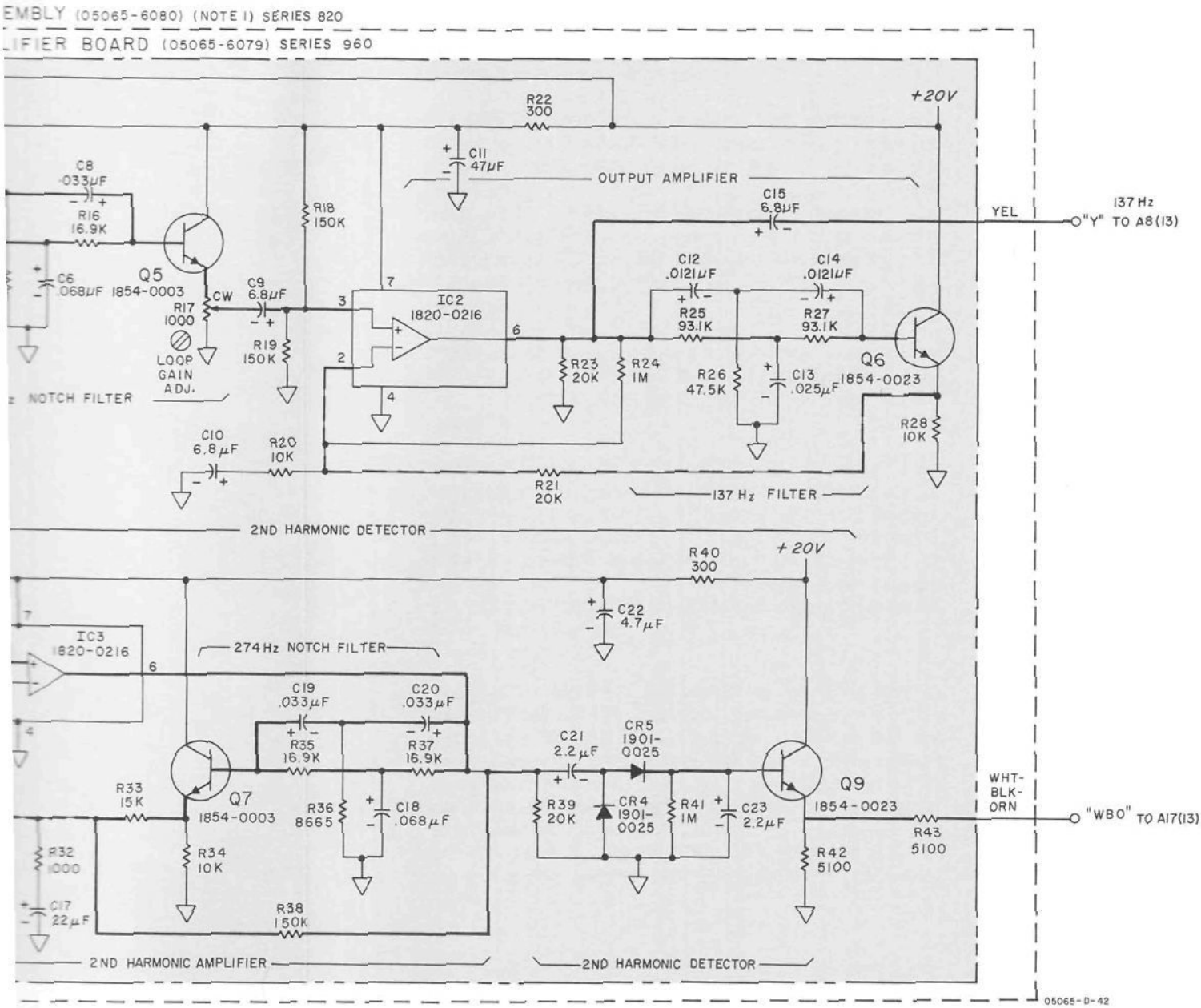

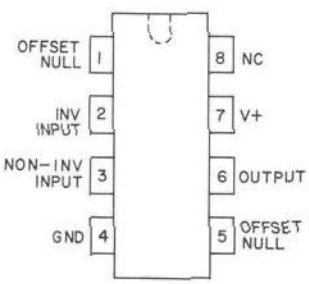

Figure 8-17. A7 AC Amplifier Assembly

PHASE DETECTOR ASSEMBLY A8 THEORY

Separate functions in A8 Phase Detector Assembly are shown in the A8 block diagram. The two basic circuits in this assembly are the modulation reference oscillator and the 137 Hz phase detector.

The reference oscillator is a phase shift oscillator producing a 274 Hz sine wave output. This signal is shaped in a Schmitt trigger for driving a frequency divider. The frequency divider output is a 137 Hz square wave applied to a phase shifter and phase detector. The phase shifter filters the square wave and provides a 137 Hz signal with very low 2nd Harmonic content to A3 Multiplier Assembly to modulate the 5 MHz quartz oscillator signal.

The phase detector produces a dc voltage proportional to the error signal received from Ac Amplifier Assembly A7. This dc output is applied to A9 Operational Amplifier.

Reference oscillator Q1, Q2, Q3 is a phase shift oscillator which operates at 274 Hz. The frequency is determined by C1, C3, R4, R7, and R8 with R8 providing a fine frequency adjustment. These components complete the positive feedback loop from Q3 to Q1 to maintain oscillation. A second feedback loop through CR1, CR2, R5, R6, and C2 provides negative feedback for amplitude limiting.

The 274 Hz signal at Q3 emitter is fed to a Schmitt trigger circuit Q4, Q5, and associated components. This circuit is a shaping circuit with very fast rise and fall times. Capacitor C7 bypasses R14 to couple fast voltage changes from Q4 collector to Q5 base. Either Q4 or Q5 conducts, the negative-going transition at its collector is supplied to the frequency divider (÷ 2) circuit. The network composed of C8, CR3, C11, R18, and R20 ensures that only negative pulses are fed to the frequency divider.

Frequency divider Q6, Q7 is a binary divider producing an output pulse after receiving two input pulses from Q5. A negative pulse from Q5 is applied to Q6 or Q7 base through gating diodes CR4 or CR5. This negative pulse turns off the conducting transistor. Capacitor C13 provides filtering for Q6, Q7 emitters and R25 establishes a small voltage at the common emitter junction to ensure that one of the two transistors is cut off.

The phase shift network includes Q8, Q9, and associated components, and allows phase adjustment of the 137 Hz sine wave. This phase shift is necessary to establish the correct relationship between the modulating 137 Hz and the 137 Hz reference sent to the phase detector. Phase adjustment control R43 provides the phase adjustment. Because the signals driving transistors Q8 and Q9 are symmetrical square waves, second harmonic content is very low (zero for perfect symmetry). Components R45, C24, R47, and C25 provide low pass filtering. The signal output is a 137 Hz sine wave with second harmonic distortion at least 80 dB below the signal level.

Phase detector Q12A, B, and associated components receive two inputs: (1) the 137 Hz reference square wave through Q10 and Q11 and, (2) the error signal from Ac Amplifier Assembly A7. The output is a dc error signal supplied to Operational Amplifier A9. Emitter followers Q10 and Q11 drive the phase detector. Transistors Q12A, B are alternately turned on and off by the 137 Hz reference square wave. The ac error signal is applied to T1 secondary. The phase detector output at T1 primary center tap is the dc error signal which goes to A9 Operational Amplifier. Potentiometer R35 is a dc zero adjustment.

Q11 output is integrated to a triangular wave by R42 and C21 for an oscilloscope signal at TP2. This signal can be used to check Q11 square wave output.

A8 MAINTENANCE

NORMAL OPERATION

Phase detector circuits provide the following outputs:

a. 130 to 142 Hz, 80 to 250 mV peak-to-peak sine wave to A3J1. This is phase modulation to A3 Multiplier Assembly.

b. 130 to 142 Hz, 1.5 to 2.1 V peak-to-peak triangular wave at A8TP2.

c. Dc error signal outputs at A8(11), A8(14), and A8TP3 which are used by A17 and A9.

NOTE

When 5065A is operating normally (Atomic loop closed) the error signal at A8(14) is very small (mostly noise).

OPERATIONAL CHECK

To determine if Phase Detector Assembly is operating normally perform the following checks:

a. Operation mode of 5065A is not important for this check. Connect an oscilloscope vertical input to A8(9). Waveform should be as in 8.

b. Set FUNCTION switch to OPER. Connect a frequency counter to A8TP2. Frequency should be between 130 to 142 Hz. Do not adjust frequency if these limits are met. If frequency is outside 130 to 142 Hz adjust A8R8 for 137 Hz.

c. Set unit controls:

1) FUNCTION to LOOP OPEN OSC FREQ ADJ FINE to 250. Connect oscilloscope vertical input to A8TP3. Connect oscilloscope horizontal input to sweep test output A8TP2. Set horizontal gain for a 5 cm sweep. Set vertical gain to .5 V/cm.

2) Adjust OSC FREQ ADJ COARSE until oscilloscope pattern is similar to the unadjusted A8TP2 Output. Display is indication that unit is tuned near resonance.

d. When unit is tuned through resonance, oscilloscope pattern changes from positive hump to a line (at resonance center) then to a negative hump. Unit should be adjusted for straight-line resonance indication between humps.

e. Set OSC FREQ ADJ FINE to 200 (50 x 10^{10} frequency offset). Oscilloscope pattern should be similar to the Optimized A8TP3 Output.

f. Remove yellow wire from A7 Assembly. Check phase detector zero with voltmeter at A8TP3. Reading should be 0 V ± 1 mV. If not, adjust A8R35.

TROUBLESHOOTING AND REPAIR

When any components are repaired or replaced the assembly should be adjusted. If Rubidium vapor assembly is replaced, phase detector circuits should be readjusted. For complete adjustment perform paragraphs 5-25, 5-27 through 5-30.

MODULE REPLACEMENT

Phase detector module may be replaced with power on. After replacement new module should be adjusted per paragraph 5-29.

Unadjusted A8TP3 Output



Optimized A8TP3 Output



Phase Detector Block Diagram

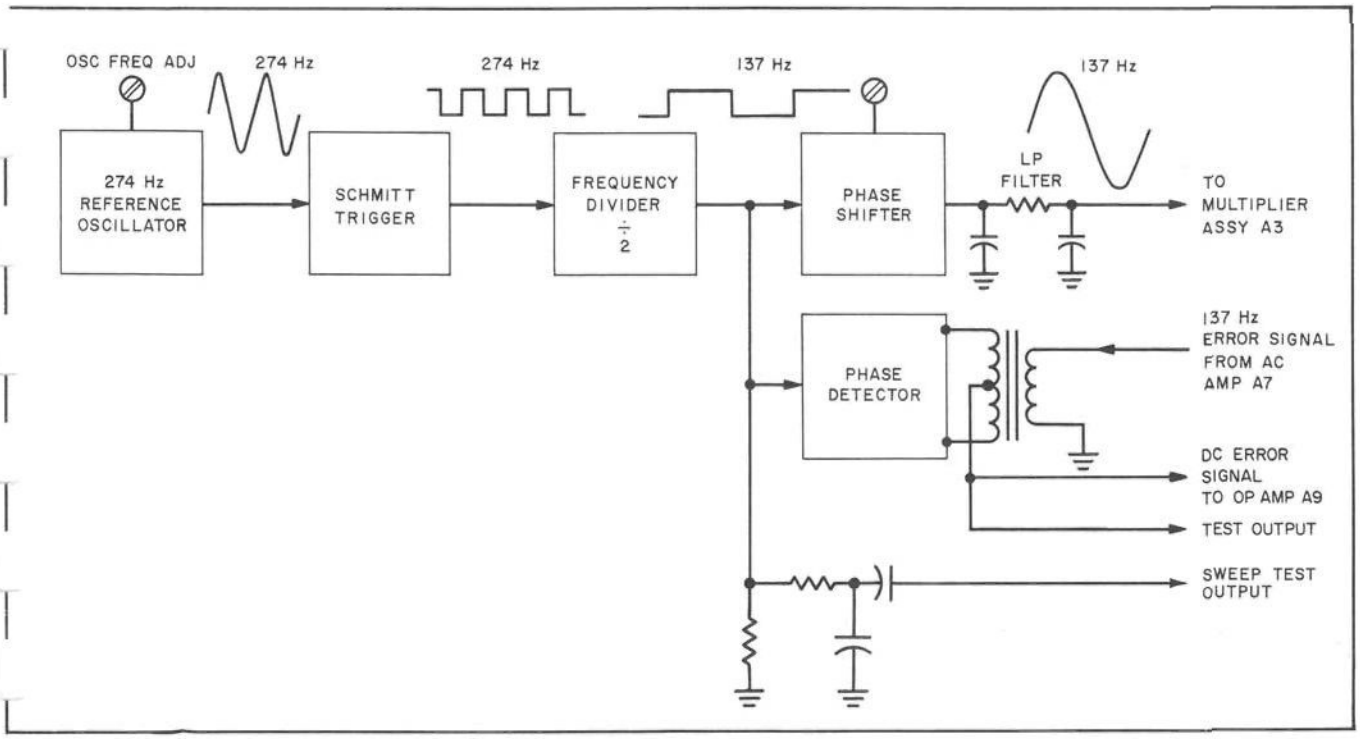

Figure 8-18
A8 PHASE DETECTOR ASSEMBLY

(See Page 8-47)

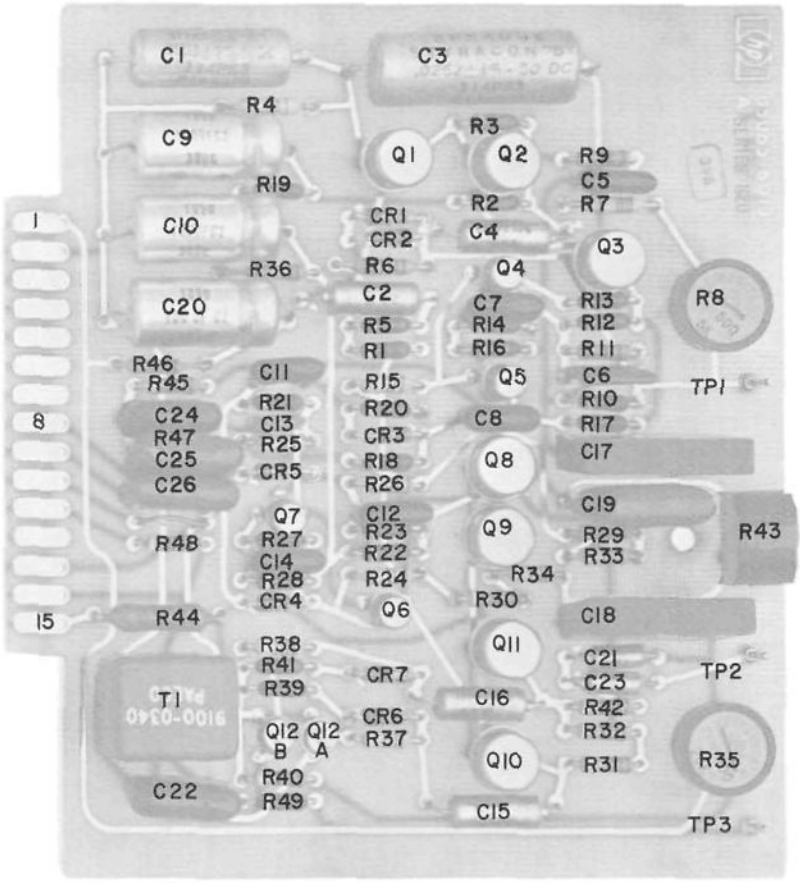

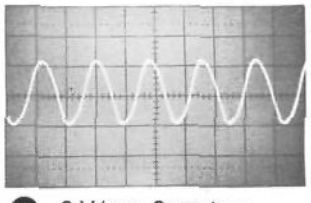

1 2 V/cm, 2 ms/cm

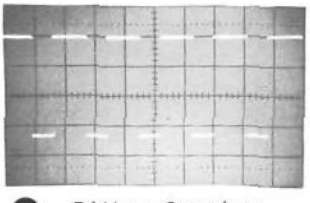

2 5 V/cm, 2 ms/cm

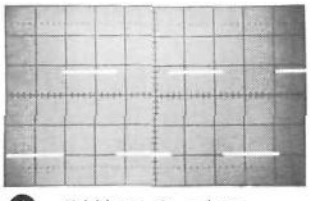

3 5 V/cm, 2 μs/cm

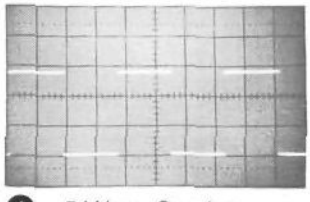

4 5 V/cm, 2 μs/cm

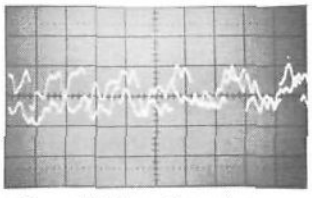

5 .1 V/cm, 2 ms/cm
(System Locked)



6 .5 V/cm, 2 ms/cm
(LOOP OPEN, FREQ
ERROR 50 parts in 10^{10})

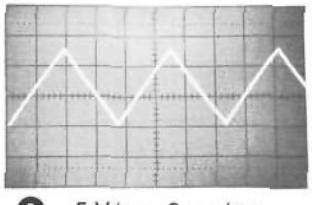

7 .5 V/cm, 2 ms/cm

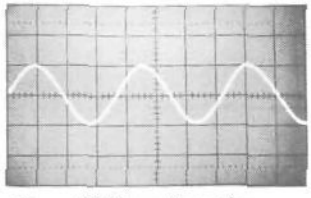

8 .1 V/cm, 2 ms/cm

5065A: Normal operation unless noted.

Oscilloscope: DC coupled

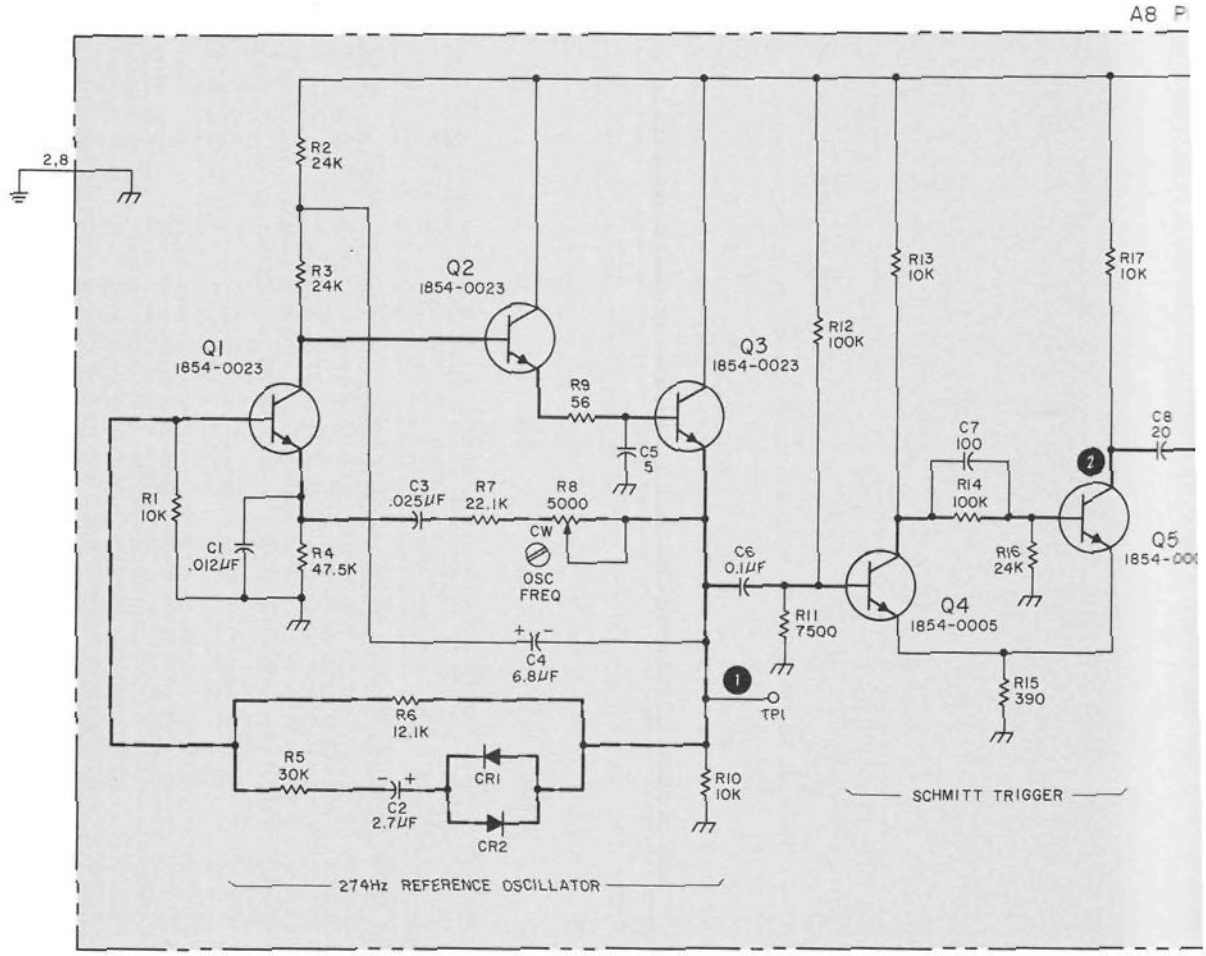

NOTES

1. REFERENCE DESIGNATIONS WITHIN THIS ASSEMBLY ARE ABBREVIATED. ADD ASSEMBLY NUMBER TO ABBREVIATION FOR COMPLETE DESCRIPTION.
2. UNLESS OTHERWISE INDICATED:
   RESISTANCE IN OHMS;
   CAPACITANCE IN PICOFARADS;
3. Q12A AND Q12B ARE A MATCHED PAIR.

A8 PHASE DETECTOR ASSEMBLY (05065-6013) (NOTE 1) SERIES 1104

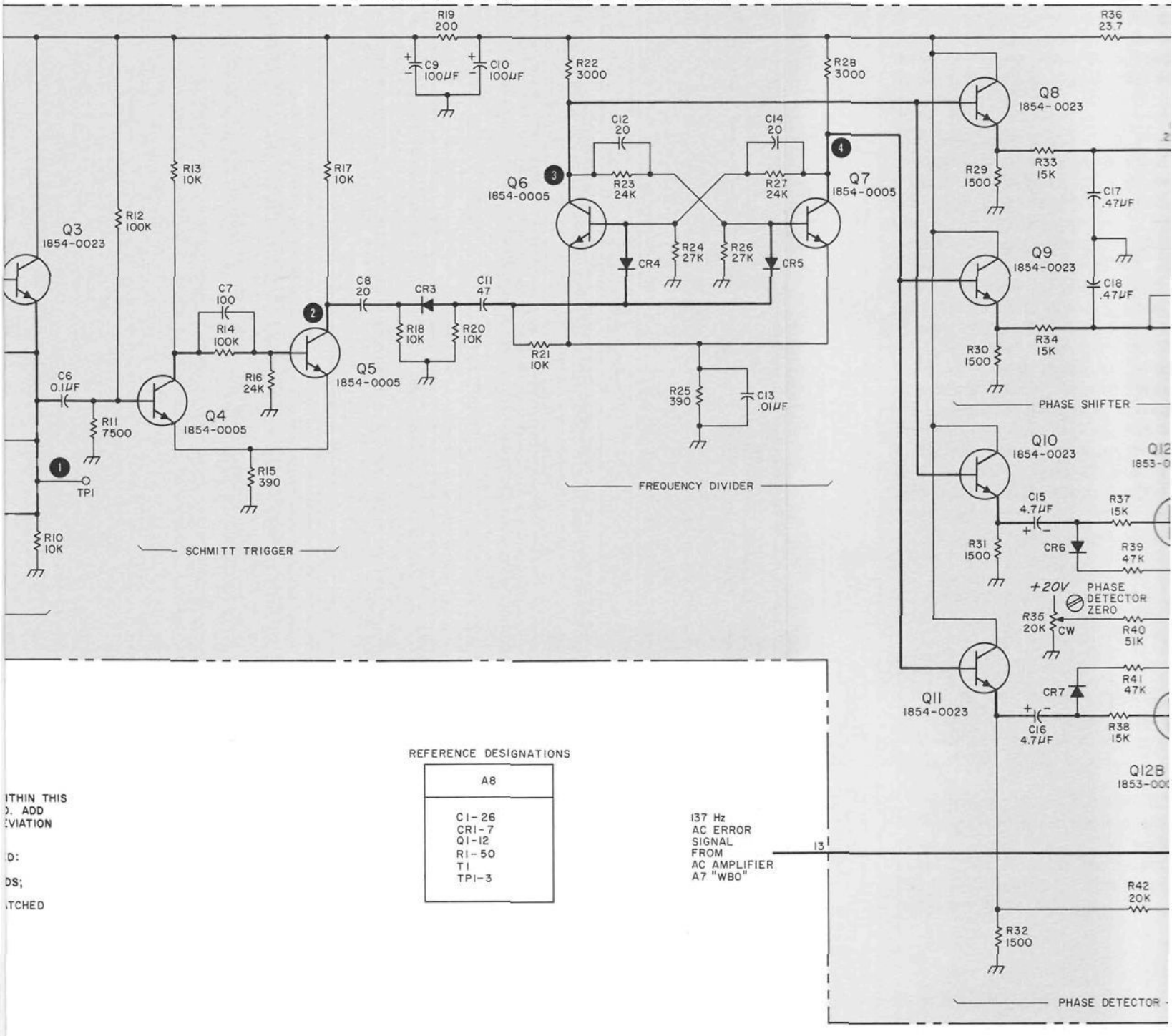

REFERENCE DESIGNATIONS

A8
C1-26 CR1-7 Q1-12 R1-50 T1 TP1-3

137 Hz AC ERROR SIGNAL FROM AC AMPLIFIER A7 "WBO"

13

ITHIN THIS
D. ADD
EVIATION

D:

DS;

ITCHED

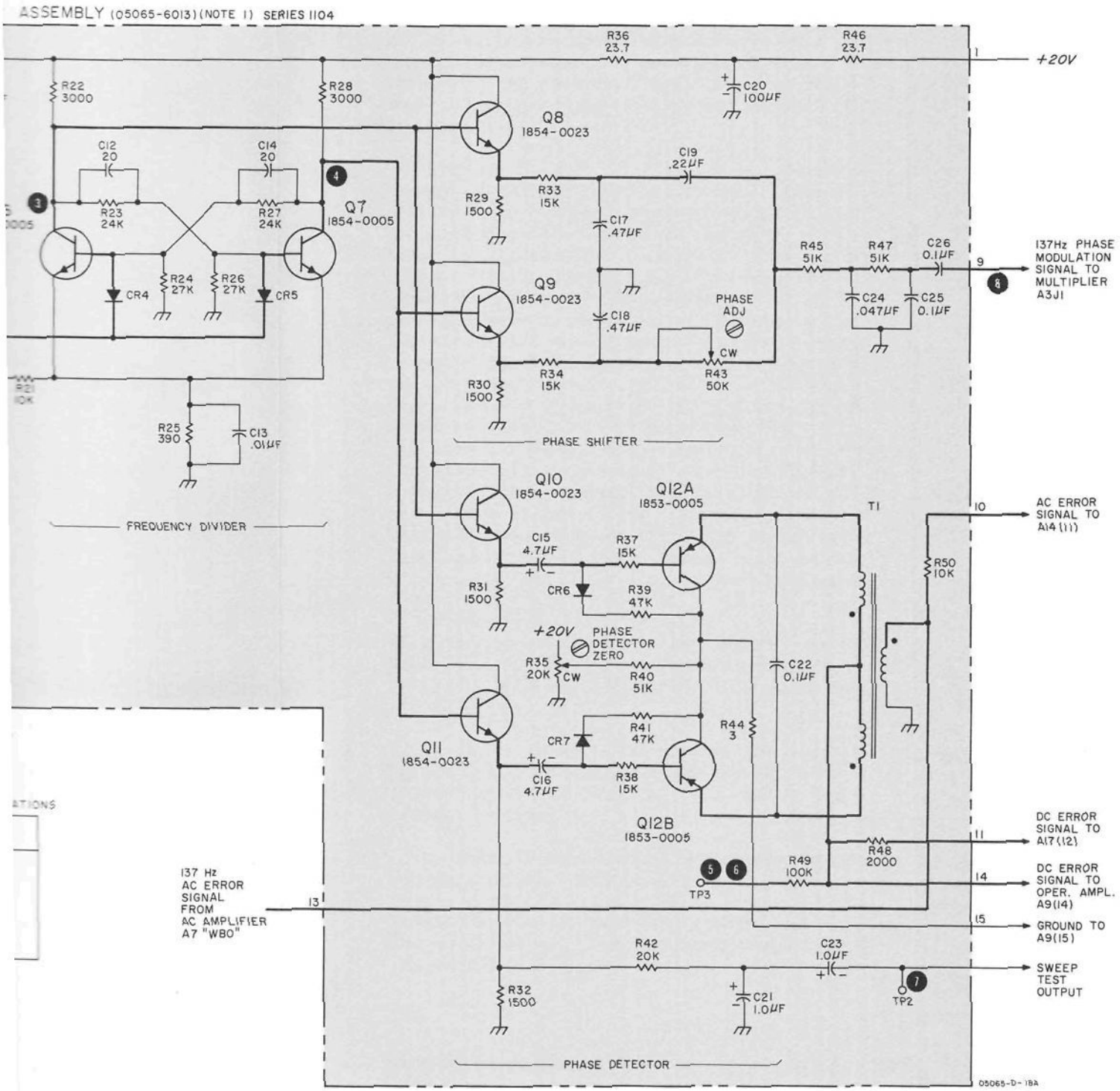

Figure 8-18. A8 Phase Detector Assembly

OPERATIONAL AMPLIFIER A9 THEORY

The A9 Assembly amplifies and integrates the output of A8 Phase Detector and provides a dc error signal for controlling the quartz oscillator in A10 Assembly. The FUNCTION switch provides a means of opening the control loop by shorting the A9 output to its input and placing a large resistance in series with the output. In addition to the integrating feedback, an amplitude-limiting feedback signal prevents saturation of A9 amplifier circuits.

Dc error signals from A8 Phase Detector connect through pin 14 to Q1A, B input amplifier. This FET amplifier stage provides a high-impedance input and push-pull outputs to differential amplifier AMPL1. Balancing adjustments are: Integrator Zero Coarse Adjustor R3 and Integrator Zero Fine Adjustor R10. Zener diode CR1 provides regulated 10 volts for AMPL1. Further dc amplification is handled by Q2 and Q3. Diodes CR6 and 7 provide the proper operating voltage for Q3. The integrating function is provided by C3 (Q3 output connects through C3 to Q1A input). Output signals in excess of ±14 volts feed back through reverse connected clamping Zener diodes CR8 and CR9. That portion of the signal in excess of ±14 volts is fed back to the input at Q1 base to limit signal amplitudes in the A9 circuits, thus providing the A9 circuits with fast overload recovery. The feedback signal routes through the diode network of CR2, 3, 4, 5. These diodes, series connected for each polarity, give isolation between input and output when no overload signal is present.

Q3 output connects to the A14 Logic Assembly as one logic input and to the CONTROL position of the CIRCUIT CHECK switch. The FUNCTION switch does two things:

a. In the OPEN LOOP position, Q3 output is shorted to Q1A input for unity gain and R5 (100K) is inserted between Q3 output and A10 input to further attenuate the signal.

b. In the OPER position, Q3 output feeds through R23 and CR10 which limits positive signals to the range of zero to +7 volts. This signal routes through the FUNCTION switch to the quartz oscillator control circuit in A10 Assembly. This output also connects to the rear-panel CONTROL jack.

A9 MAINTENANCE

NORMAL OPERATION

The integrating amplifier uses the error signal from the phase detector as an input and provides the control voltage for the Quartz Oscillator Assembly A10. The output voltage swing is clamped between -14 Vdc and +7 Vdc.

OPERATIONAL CHECK

a. Remove A8 circuit board from its socket.

b. Short pins 14 and 15 of A9 Assembly and connect a dc voltmeter to rear panel CONTROL jack.

c. Set FUNCTION switch to LOOP OPEN and then to OPER. Measure voltage on dc meter. This voltage may be drifting, caused by the Integrating Amplifier integrating its internal zero offset. If voltage drift exceeds 20 mV/minute, A9R3 and R10 should be adjusted for minimum drift.

d. Remove short from pins 14 and 15. Set FUNCTION switch to LOOP OPEN and connect circuit as shown:

A9 Test Setup

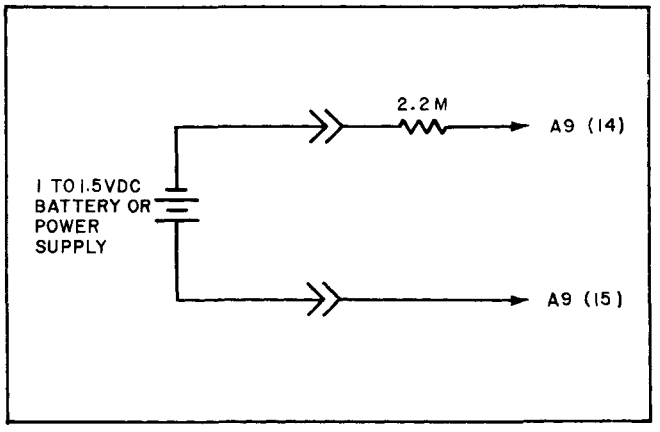

e. Set dc voltmeter to 30 V range. Observing dc voltmeter set FUNCTION switch to OPER. The voltage will increase at the rate of about 1 V/second to about -14 V.

f. Set FUNCTION switch to LOOP OPEN. The voltage will go to ZERO. Now reverse the battery or power supply connections so that the negative terminal is connected to the 2.2 megohm resistor.

g. Set voltmeter to read positive voltages. Set FUNCTION switch to OPER and observe voltmeter reading. Reading should increase at a rate of about 1 V per second to a final reading of approximately +7 V.

h. Remove connection to A9, pins 14 and 15. Remove dc voltmeter. Reinstall A8 Circuit board. This completes the check.

ASSEMBLY REPAIR AND REPLACEMENT

After repair or replacement of A9 Assembly, A9R3 and A9R10 should be adjusted as described in Operational Checks a, b, and c.

Figure 8-19
A9 INTEGRATOR ASSEMBLY

(See Page 8-49)

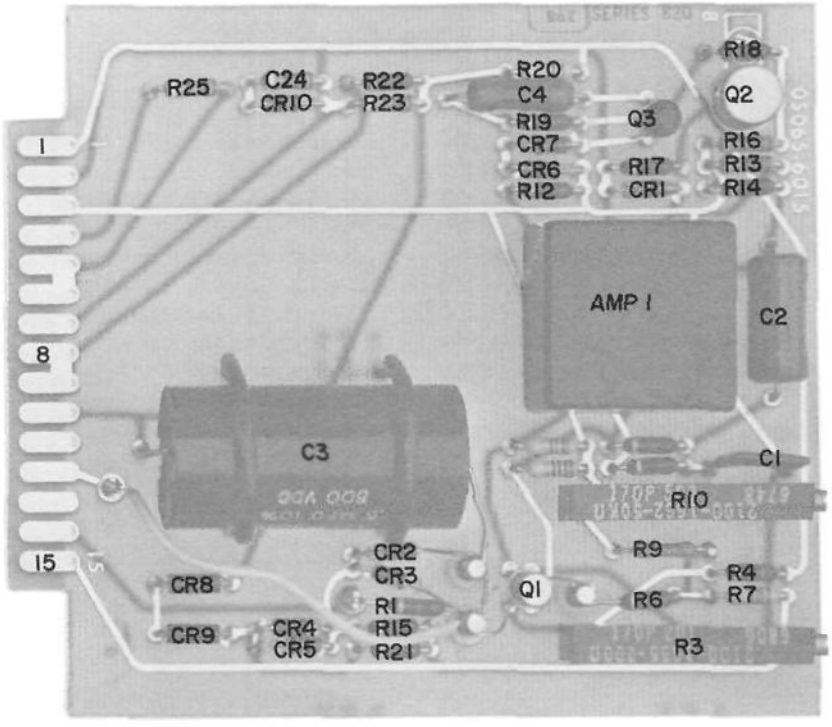
R25
C24
CR10
R22
R23
R20
C4
R19
CR7
CR6
R12
Q3
R17
CR1
R18
Q2
R16
R13
R14
AMP 1
C2
C3
C1
R10
R9
R4
R7
R6
R3
CR2
CR3
R1
R15
R21
CR8
CR9
CR4
CR5
Q1
1
8
15

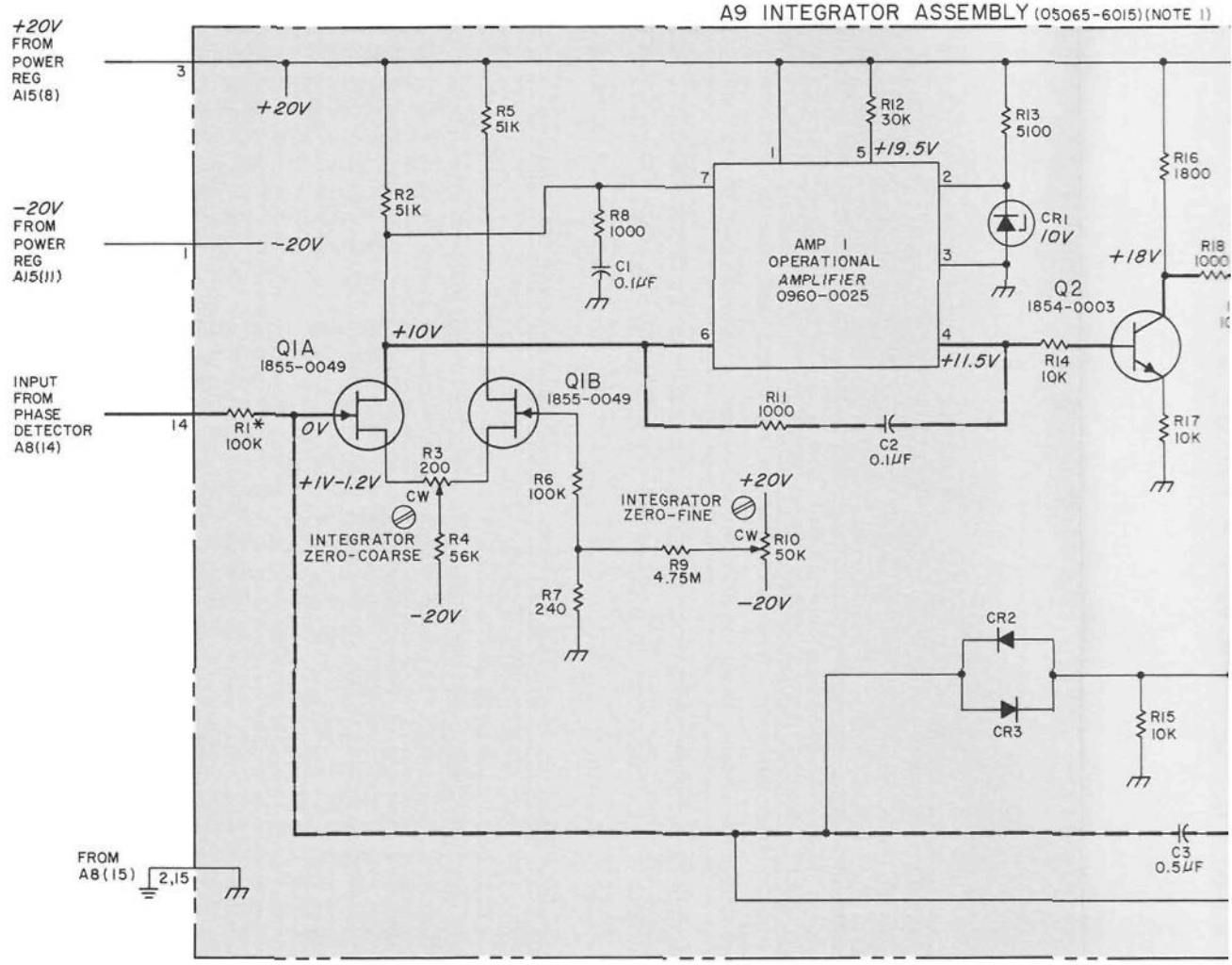

NOTES

1. REFERENCE DESIGNATIONS WITHIN THIS ASSEMBLY ARE ABBREVIATED. ADD ASSEMBLY NUMBER TO ABBREVIATION FOR COMPLETE DESCRIPTION.
2. UNLESS OTHERWISE INDICATED: RESISTANCE IN OHMS; CAPACITANCE IN PICOFARADS;
3. ASTERISK (*) INDICATES SELECTED COMPONENT, AVERAGE VALUES SHOWN
4. DC VOLTAGES WITH FUNCTION SWITCH AT LOOP END.

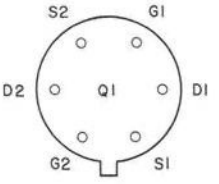

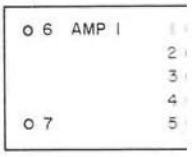

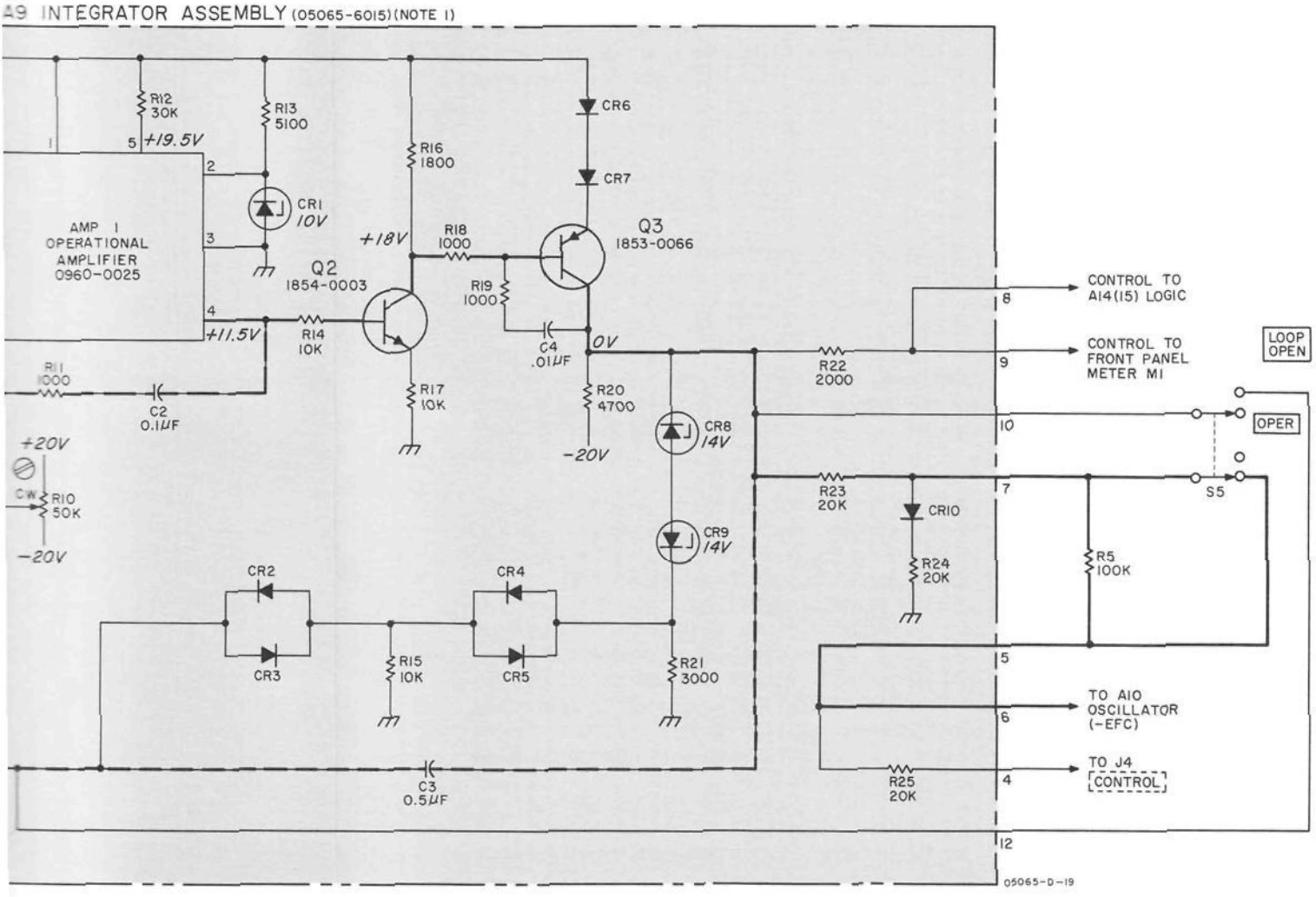

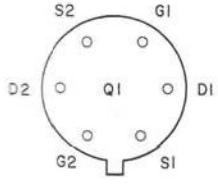

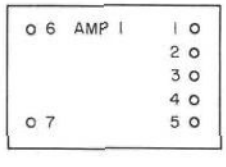

REFERENCE DESIGNATIONS

NO PREFIX	A9
R5 S5	AMP 1 C1-4 CR1-10 Q1-3 R1-25

Figure 8-19. A9 Integrator Assembly

QUARTZ CRYSTAL OSCILLATOR ASSEMBLY A10 THEORY

GENERAL

The voltage controlled 5 MHz signal is generated by the circuits in Quartz Oscillator Assembly A10. This assembly is composed of 4 major sections:

a. Temperature control circuits.
b. 5 MHz quartz oscillator circuits.
c. Automatic gain control circuits.
d. Power amplifier circuits.

The quartz oscillator generates the 5 MHz signal. The AGC amplifier provides feedback to stabilize oscillator crystal current. Power amplifier circuits and a crystal filter isolate the quartz oscillator from external variations and supply the buffered 5 MHz to Frequency Divider Assembly A6 and Multiplier Assembly A3. Oven control circuits maintain the factory set temperature through proportional control of the internal heater.

The oven temperature is set at the factory to operate the crystal at a temperature where changes in crystal temperature have the smallest effect on oscillator frequency. Placing the quartz oscillator and AGC components inside the oven further improves the oscillator temperature-vs-frequency stability. Shielding and decoupling networks in all leads, except the 5 MHz output, reduce the Radio Frequency Interference radiated or received by the oscillator assembly. The assembly is sealed at the factory; the only adjustments accessible are the Oscillator Frequency FINE knob adjustment, the Oscillator Frequency COARSE screwdriver adjustment, and the Filter crystal adjustment.

TEMPERATURE CONTROL CIRCUITS

PROPORTIONAL CONTROL. Two heaters maintain oven temperature: HR1, which is proportionally controlled to provide continuous oven temperature control; and HR2, which is thermostatically controlled, and provides fast warm-up. The heater current in a proportional control circuit is a continuous function of oven temperature. The heater current in a thermostat control circuit is either "on" or "off", depending on oven temperature setting. Both control circuits contain a thermal fuse to prevent damage to components within the oven, if the assembly overheats.

NOTE

Reference designators in the following paragraphs are abbreviated; for complete reference designators, add prefix "A10" to reference designators used.

PROPORTIONAL TEMPERATURE CONTROL CIRCUITS
Ac Controller A1 is a Wien bridge oscillator with emitter follower and detector providing a dc signal voltage, proportional to oven temperature, for the dc controller. The Wien bridge oscillator frequency (about 3 kHz) is determined by a phase-shifting network in the bridge A1R1, A1R2, A1C1, and A1C2.

The oscillator amplitude is determined by the degenerative feedback through A1R3, A1R4, and RT1 (inside the oven). Since thermistor RT1 is within the oven, Wien bridge coscillator output level is determined by the oven temperature. The thermistor has a negative temperature coefficient so a decrease in oven temperature causes thermistor resistance to increase, increasing oscillator amplitude. Diodes A1CR1, A1CR2, and capacitor A1C10 translate this to a negative dc level applied to the dc controller circuit in A3.

Dc Controller A3Q2, A3Q3, A3Q4, and associated components receives the dc signal (proportional to Wien bridge oscillator amplitude) from ac controller circuits and controls current through HR1. The HR1 heater current is controlled by A3Q4 which is driven through A3Q3 by amplifier A3Q2. Diodes A3CR1 and A3CR2 develop 1.2 volts. The voltage across A3R8 depends on heater current through it, and is added to the voltage across the diodes. This forms a degenerative bias signal for A3Q2. Thus, an increase in current through A3R8 increases A3Q2 current, decreases A3Q4 current and decreases current through A3R8 and HR1.

5 MHz OSCILLATOR AND AGC CIRCUITS

GENERAL. The 5 MHz signal is generated by an electrically controlled quartz crystal oscillator within the oven. An AGC circuit, also in the oven, provides some amplification for the 5 MHz signal and AGC feedback to prevent mechanical vibrations from causing crystal damage. The oscillator frequency is coarse tuned by A2A1C7 which is connected to the front panel Oscillator Frequency COARSE adjustment knob and fine tuned by R3 (front panel Oscillator Frequency FINE adjustment). The only other adjustment that can be performed in the field is the 5 MHz Filter adjustment, A3C10. For access to A3C10, A10 Assembly must be detached from the main chassis. In operation, with the FUNCTION switch at OPER, the oscillator frequency is electrically tuned by the dc error signal from A9 Integrator Amplifier Assembly. This dc error signal connects through A10J1, marked (-EFC) to frequency-controlling Varactor A1A1CR1 to correct the 5 MHz output frequency.

In the oscillator circuit, oscillator stage A1A1Q1 drives resonant circuit A2A1L2, A2A1C6, A2A1C7, A2A1C9, and A2A1CR1. Oscillator feedback is through A1A1C10, A2A1C11, A2A1C12, and A2A1L3 to A2A1Q1 base. Capacitor A2A1C8 serves to bypass A2A1Q1 emitter resistance, A2A1R2. Bias control for oscillator stage A2A1Q1 is provided by the AGC circuit in A2A2 subassembly; as the oscillator output level increases, the AGC circuit decreases A2A1Q1 bias, and decreases oscillator output amplitude.

'aractor A2A1CR1 capacitance decreases as the biasing oltage applied from A9 Assembly through J1 (-EFC) increases positively producing an oscillator frequency ıcrease. In this manner, oscillator frequency is corected by the dc error voltage to maintain frequency stability with respect to the Rb^{87} resonance. The other ınput to Varactor A2A1CR1 is the FINE Oscillator Freuency input through J2 (+EFC) from the front-panel INE knob. This control is normally used only for testing and with the instrument operating, is set at 250.

he A2A2 AGC Assembly contains two tuned 5 MHz amplifiers, the AGC circuit, and the 6 and 15 volt power supplies. The +6 volt supply is used as A2A1Q1 collector supply and as A2A2Q1 and A2A2Q2 bias supply. he +15 volt supply is the reference voltage for R3, the front panel Oscillator Frequency FINE adjustment.

he open-loop gain of tuned amplifier A2A2Q1 is adısted by A2A2R3; the closed-loop gain of A2A2Q1 an A2A2Q2 is determined by feedback resistor A2A2R9. A2A2C5 tunes A2A2Q1 collector resonance. Second ıned amplifier stage A2A2Q2 provides output power t 5 MHz to A10A3. One secondary winding from output transformer A2A2T2 provides a feedback signal that in phase with the input signal at A2A2Q1 base; this gnal is fed back to A2A2Q1 emitter through A2A2R9 or gain stabilization of the amplifier pairs; to A2A2Q2 base through A2A2C3 for neutralization; and through 2A2C13 to AGC detecting diodes A2A2CR3 and 2A2CR4. A2A2C11 tunes A2A2T2 for resonance.

Diodes A2A2CR3 and A2A2CR4 provide a dc voltage oportional to the 5 MHz output voltage level this voltge is algebraically added to the bias voltage established by A2A2R11 and AGC gain adjustment A2A2R12. The resultant voltage is fed back to the base A2A1Q1 oscillator stage for bias control to regulate scillator drive level to the quartz crystal.

0A3 POWER AMPLIFIER

The A10A3 assembly contains the 5 MHz output amplifiers and the dc controller circuit which supplies dc rrent for the oscillator oven heater. For a discussion the dc controller, see "Proportional Temperature Control Circuit" at the beginning of this section.

MHz from A2A2 couples through A3C1 to buffer amplifier A3Q1. Selected resistor A3R9 sets A3Q1 gain for the correct ouput at J4 (factory adjustment). This ıge feeds adjustable crystal filter network of A3Y1 E12, A3C9, 5 MHz crystal filter adjustment A3C10, A3C11, A3C6, and A3C8. Capacitor A3C6 and A3C8 provide ac voltage division for the 5 MHz output to the Frequency Divider Assembly.

Emitter follower A3Q5 couples the filter network to output amplifier A3Q6. The gain of A3Q6 stage is adjusted A3R19 and collector resonance is tuned with A3C12. utput transformer A3T1 feeds the A3 Multiplier Assembly through A3J3.

Supply voltage filtering is supplied by A3L1 and A3C5 for A3Q1 and by A3R11 and A3C15 for A3Q5 and A3Q6. Additional RF decoupling for A3Q1 is supplied by A3R5 and A3C3.

A10 MAINTENANCE

The oscillator assembly is not recommended for field repair. Instrument warranty is void if repair or adjustment is attempted inside the assembly. Adjustments other than those available on instrument front panel will also void the warranty. If it is established that a defective component or circuit trouble exists within the oscillator assembly, contact the nearest Hewlett-Packard Sales and Service Office for shipping instructions (see paragraph 2-10 for packing information).

OPERATIONAL CHECK

The following procedures may be used to determine proper operation and should be used if the assembly is replaced.

CIRCUIT CHECKS. The following circuit checks involve checking oscillator inputs and outputs.

a. Set instrument to normal operation with front panel MODE switch set to LOOP OPEN.

b. Disconnect the +20 red wire from the oscillator assembly. Connect a high impedance dc voltmeter positive lead (+) to the disconnected red wire. Connect comman (-) voltmeter lead to instrument chassis. Voltmeter should indicate +20 V. Disconnect voltmeter and connect red wire back to +20 terminal on oscillator assembly.

c. Disconnect the +24 white-red-blue wire from oscillator assembly. Connect a high impedance dc voltmeter positive lead (+) to the disconnected white-red-blue wire. Connect common (-) voltmeter lead to instrument chassis. Voltmeter should indicate between +22 and +33 volts. Disconnect voltmeter and connect white-red-blue wire back to +24 terminal on oscillator assembly.

d. Connect high impedance dc voltmeter to wht-orn wire on OSC FREQUENCY $X10^{-10}$ control. Connect common (-) lead to chassis ground. Voltmeter should indicate between +14 and +16 volts. Disconnect voltmeter.

e. Connect dc voltmeter to OSC OVEN pin on Terminal Board Assembly A17(5). Connect common (-) lead to chassis ground. Voltmeter should indicate about +16 volts. Disconnect voltmeter.

f. Connect an oscilloscope vertical channel through a 50-ohm feedthru to A10P3. Oscilloscope display should be 5 MHz, 3 V peak-to-peak. Remove oscilloscope and replace A10P3.

g. Connect oscilloscope vertical channel through a 50-ohm feedthru to A10P4. Oscilloscope display should be 5 MHz, .2 V peak-to-peak. Remove oscilloscope and reconnect A10P4.

h. Set CIRCUIT CHECK switch to 2ND HARMONIC. Adjust OSC FREQUENCY X10^{-10} control maximum clockwise, maximum counterclockwise, and return to 250. CIRCUIT CHECK meter should track with control movement.

i. Disconnect cable from -EFC on oscillator assembly. Connect dc power supply common lead (-) to -EFC on oscillator assembly. Connect positive lead (+) to chassis ground. Slowly adjust dc power supply to -5 volts. CIRCUIT CHECK meter should track with power supply. Disconnect power supply and reconnect -EFC cable.

j. Set CIRCUIT CHECK switch to OSC OVEN, 5 MHz, SUPPLY, and observe CIRCUIT CHECK meter indication at each position. Meter indications should agree with Table 3-1. This completes the oscillator circuit checks.

OUTPUT VOLTAGE AND WAVEFORMS. In addition to the circuit checks, the following checks can be performed, using equipment listed in Table 5-5. To observe 5 MHz output voltage and waveforms:

a. Terminate rear panel 5 MHz output jack with 50-ohm termination and connect an RMS voltmeter to front panel 5 MHz output jack. Output level should be at least 1 V rms. If it is not, use adapter cable provided with instrument and connect ac voltmeter with 50 load to A10J3 ("1 V"). Signal should be 1 V rms. If this signal level is ok, troubleshoot 5 MHz signal path from A10 oscillator assembly to front (or rear) panel. If signal level is less than 1 V rms at A10J3, realign output crystal filter as described below.

b. Remove 50Ω load and, using the adapter cable connect ac voltmeter to A10J4 ("DIV"). Voltage here should be greater than 60 mV. If output from A10J3 ("1 V") as measured above is 1 V rms and output from A10J4 ("DIV") is less than 60 mV rms A10 assembly is probably defective and should be replaced.

Realignment of Output Crystal Filter.

a. Remove ac and dc power from instrument.

b. On bottom deck unsolder 115 Vac connection to A10 assembly. See adjacent Figure for location of these terminals.

c. Tape the ends of these wires so they cannot short or make contact with the chassis.

d. Remove the 4 screws which secure the A10 assembly to the instrument chassis.

e. Check to see that the wires removed in step 2 are properly insulated.

f. Reconnect ac power, allow instrument to warm up.

g. Connect ac voltmeter with 50Ω load to A10J3.

h. Lift A10 assembly up so that holes on front are accessible. Then, using a non-conductive screwdriver, adjust "5 MHz filter ADJ" (see adjacent Figure) for maximum on meter. This should be 1V rms or greater. If it is not, replace A10 Assembly with restored unit 00105-6034.

i. Remove ac and dc power and reconnect 110 V leads to bottom terminals. Replace protective cover or 110 V terminals, replace 4 hold-down screws, and cable on J3.

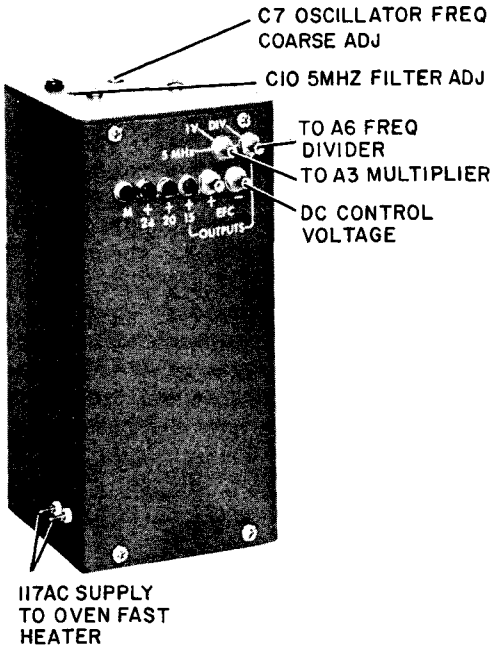

NOTE

If Standby Battery Option 002 is installed, remove instrument top cover. Remove ac power and fuse F4 located on instrument deck.

MODULE REPLACEMENT

To remove Oscillator Assembly A10, proceed as follow

a. Remove ALL operating power.

b. Remove bottom cover and disconnect all electrical connections.

c. Remove 4 screws holding oven assembly in place.

d. Remove oscillator assembly from instrument.

e. Replace oscillator by reversing the above procedure.

f. After replacing the new oscillator assembly, perform turn-on and operational check.

Figure 8-20
A10 OSCILLATOR ASSEMBLY BLOCK DIAGRAM

(See Page 8-53)

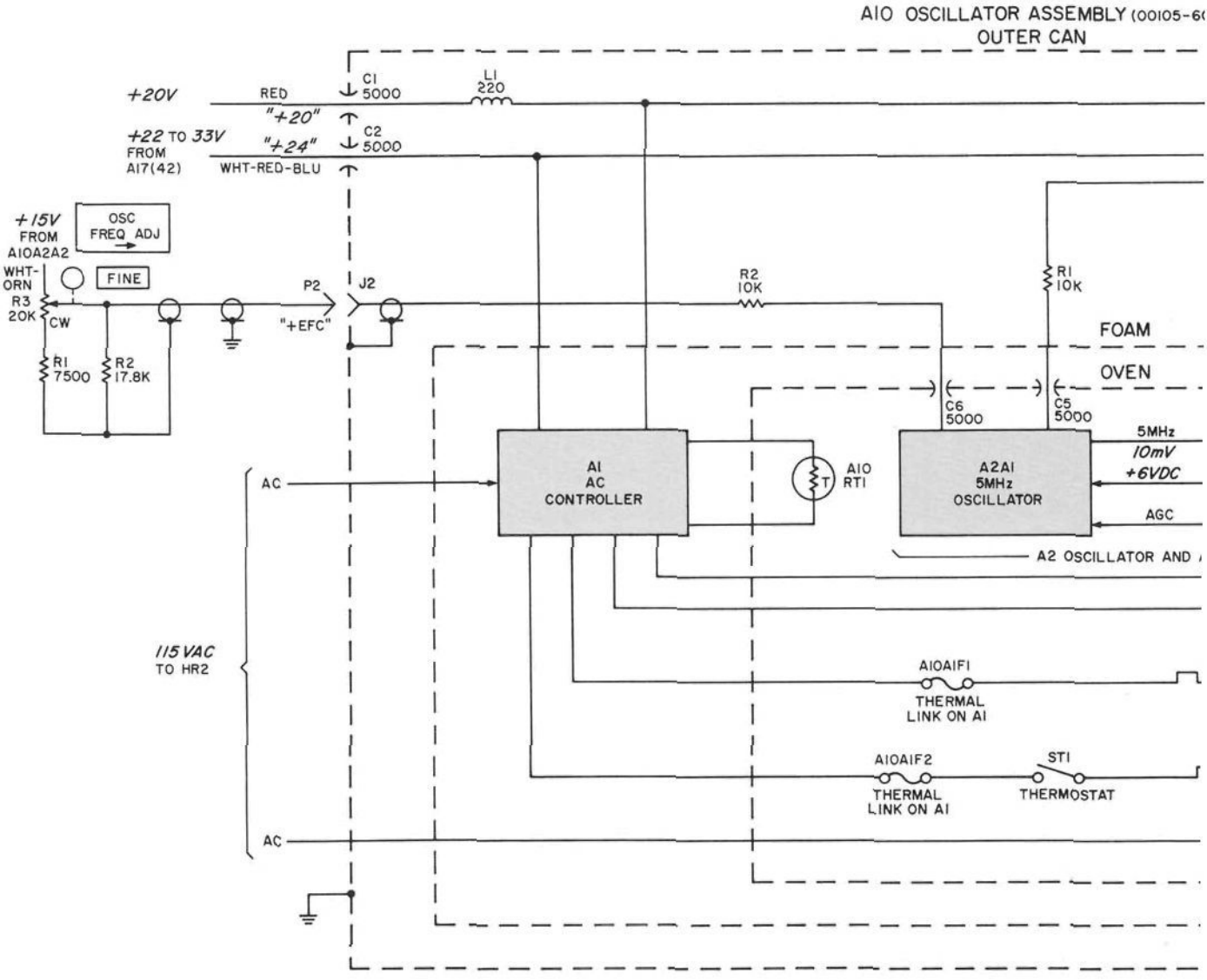

NOTES

1. REFERENCE DESIGNATIONS WITHIN THIS ASSEMBLY ARE ABBREVIATED. ADD *ASSEMBLY NUMBER TO ABBREVIATION* FOR COMPLETE DESCRIPTION.
2. UNLESS OTHERWISE INDICATED:
   RESISTANCE IN OHMS;
   CAPACITANCE IN PICOFARADS;
   INDUCTANCE IN MICROHENRIES

REFERENCE DESIGNATIONS

NO PREFIX	A10	A10
P1,2 R1-3	C1-8 HR1,2 J1-4 L1,2 R1,2 RT1 ST1	F1,2

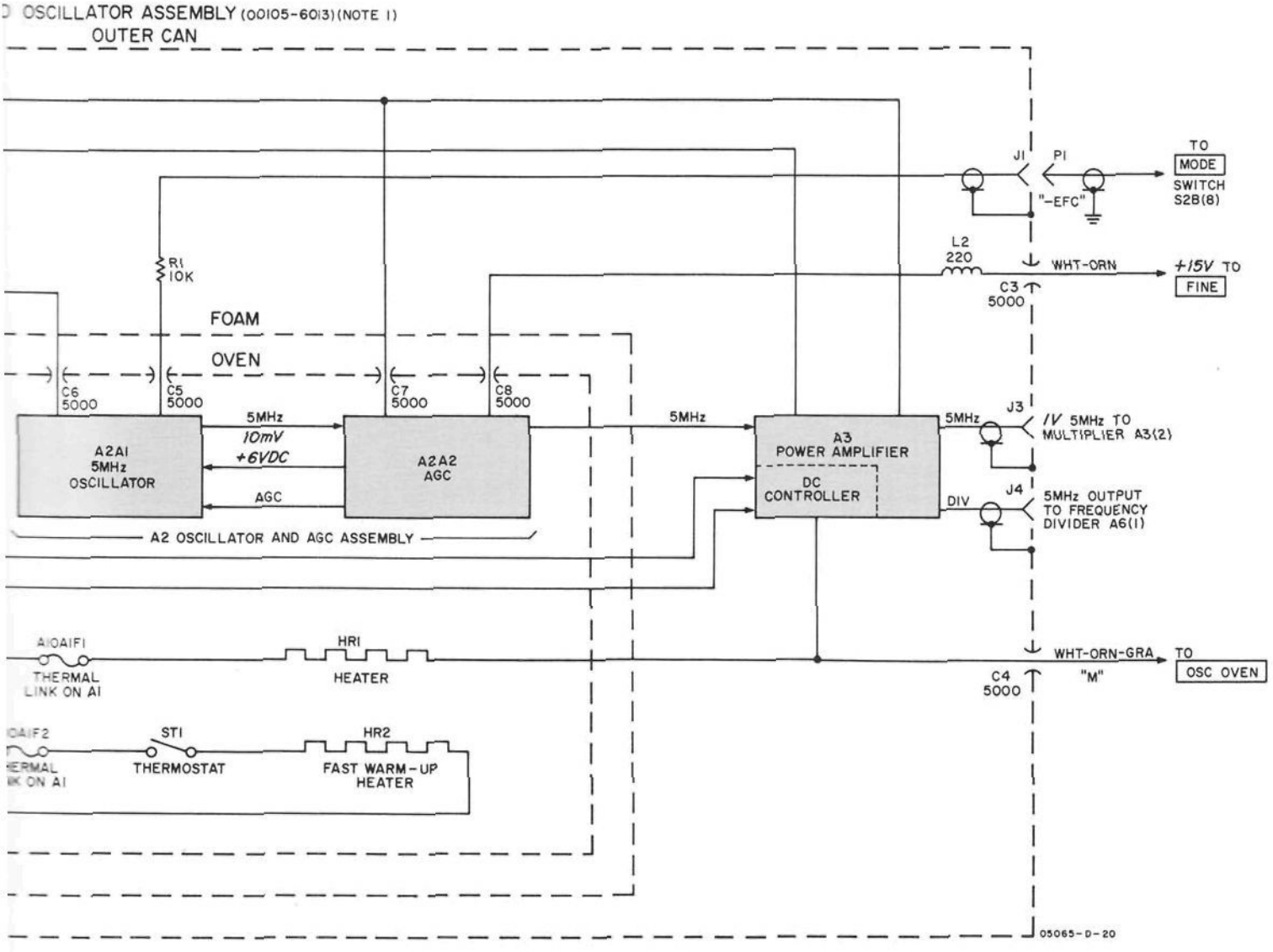

REFERENCE DESIGNATIONS

NO PREFIX	A1O	A1OA1
P1,2 R1-3	C1-8 HR1,2 J1-4 L1,2 R1,2 RT1 ST1	F1,2

Figure 8-20. A10 Oscillator Assembly Block Diagram

TEMPERATURE CONTROLLER A11 THEORY

The A11 Assembly incorporates two temperature controller circuits that work with the sensing and heating elements in A12 RVFR Assembly for temperature control of the Rb^{87} cell, and the Rb^{87} lamp.

The two regulator circuits are nearly identical so discussion will be confined to the upper regulator circuit on A11 schematic (which feeds the cell heater).

Q1 and Q2 comprise a Wein bridge oscillator with emitter follower and detector providing a dc signal voltage representing the required correction for the dc controller section. Oscillator frequency (about 3 kHz) is determined by a phase-shifting network connecting to Q1 base through C8, R1, R3, C1, and C2. Amplitude is determined by the required heater power necessary to maintain proper operating temperature of the cell oven. Information on cell oven temperature is conveyed to the resistive leg of the Wein bridge by A12TR1 in the cell oven. Temperature setting of this heater control circuit is done by selecting A11R5. The cell oven thermistor has a negative temperature coefficient, so a decrease in oven temperature causes thermistor resistance to increase, thereby increasing oscillator amplitude. Diodes CR1 and CR3, and C21 translate oscillator output to a negative dc level applied to Q5.

The negative signal at Q5 base reduces Q5 collector current; which in turn increases Q7 collector current and the heater current output of chassis-mounted Q3. In this manner, heater current is increased to compensate for a temperature drop. When equilibrium is established (oven at required temperature), the Wein bridge is balanced with oscillator amplitude at a level corresponding to the required heater current. Diode CR7 provides temperature stabilization for Q5. Diode CR5 protects Q1 base-to-emitter junction from reverse voltage.

A11 MAINTENANCE

NORMAL OPERATION

The A11 Assembly contains two oven controller circuits. These circuits control the temperature of the spectral lamp and the Rubidium Absorption cell inside the RVFR Assembly A12.

Proper temperatures are maintained by controlling dc current in the oven windings.

The output of the A11 Assembly are at pins 2 and 14. Nominal output voltage is approximately 18 V at these terminals.

OPERATIONAL CHECK

Proper operation of this assembly can be easily checked by (1) placing your hand on the RVFR Assembly and noting that it is warm to the touch and, (2) checking front panel meter indications in the CELL OVEN and LAMP OVEN positions. The meter should read between 15 and 35. (NOTE: These readings will change with ambient temperature.)

TROUBLESHOOTING AND REPAIR

Disconnect ac and dc power before removing A11 Assembly.

ASSEMBLY REPLACEMENT

a. Disconnect ac and dc power (Battery fuse or Option 002).

b. Remove A11 Assembly. Remove A11R5 and install it on the new circuit board.

c. Remove A11R6 from the old board and install it on the new one.

d. Install new board and restore power.

Figure 8-21
A11 RVFR TEMPERATURE CONTROLLER ASSEMBLY

(See Page 8-55)

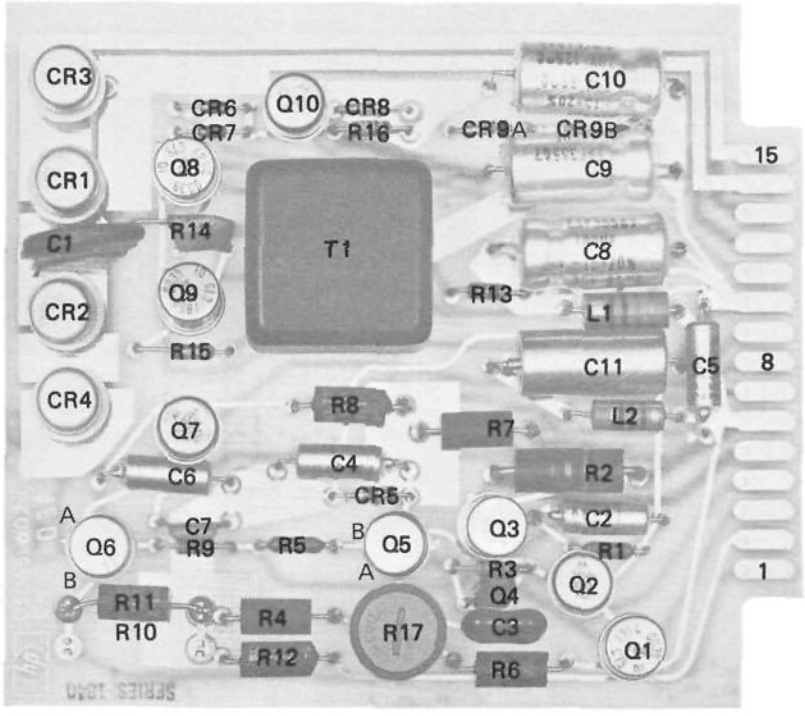

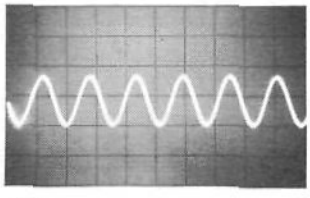

1 .5 V/cm, 1 ms/cm

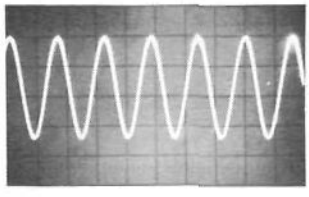

2 .5 V/cm, 1 ms/cm

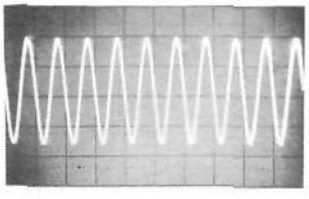

3 .5 V/cm, .1 ms/cm

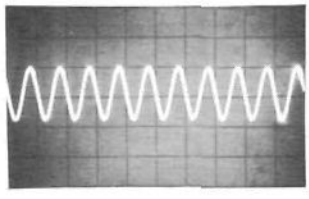

4 .5 V/cm, .1 ms/cm

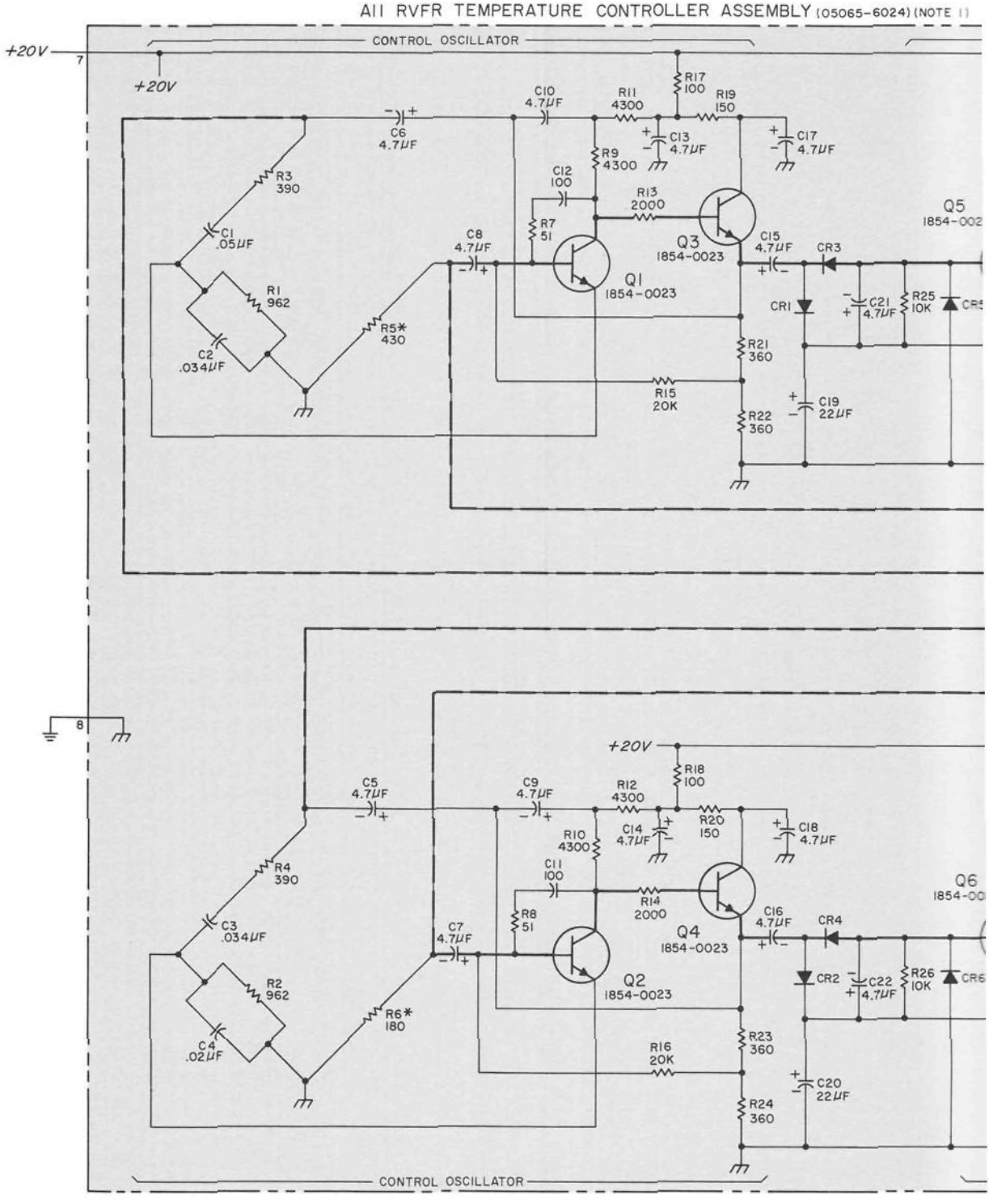
A11 RVFR TEMPERATURE CONTROLLER ASSEMBLY (05065-6024) (NOTE 1)
CONTROL OSCILLATOR
+20V
7
8
R1 962
R2 962
R3 390
R4 390
R5* 430
R6* 180
C1 .05µF
C2 .034µF
C3 .034µF
C4 .02µF
C5 4.7µF
C6 4.7µF
C7 4.7µF
C8 4.7µF
C9 4.7µF
C10 4.7µF
C11 100
C12 100
C13 4.7µF
C14 4.7µF
C15 4.7µF
C16 4.7µF
C17 4.7µF
C18 4.7µF
C19 22µF
C20 22µF
C21 4.7µF
C22 4.7µF
R7 51
R8 51
R9 4300
R10 4300
R11 4300
R12 4300
R13 2000
R14 2000
R15 20K
R16 20K
R17 100
R18 100
R19 150
R20 150
R21 360
R22 360
R23 360
R24 360
R25 10K
R26 10K
Q1 1854-0023
Q2 1854-0023
Q3 1854-0023
Q4 1854-0023
Q5 1854-002
Q6 1854-00
CR1
CR2
CR3
CR4
CR5
CR6

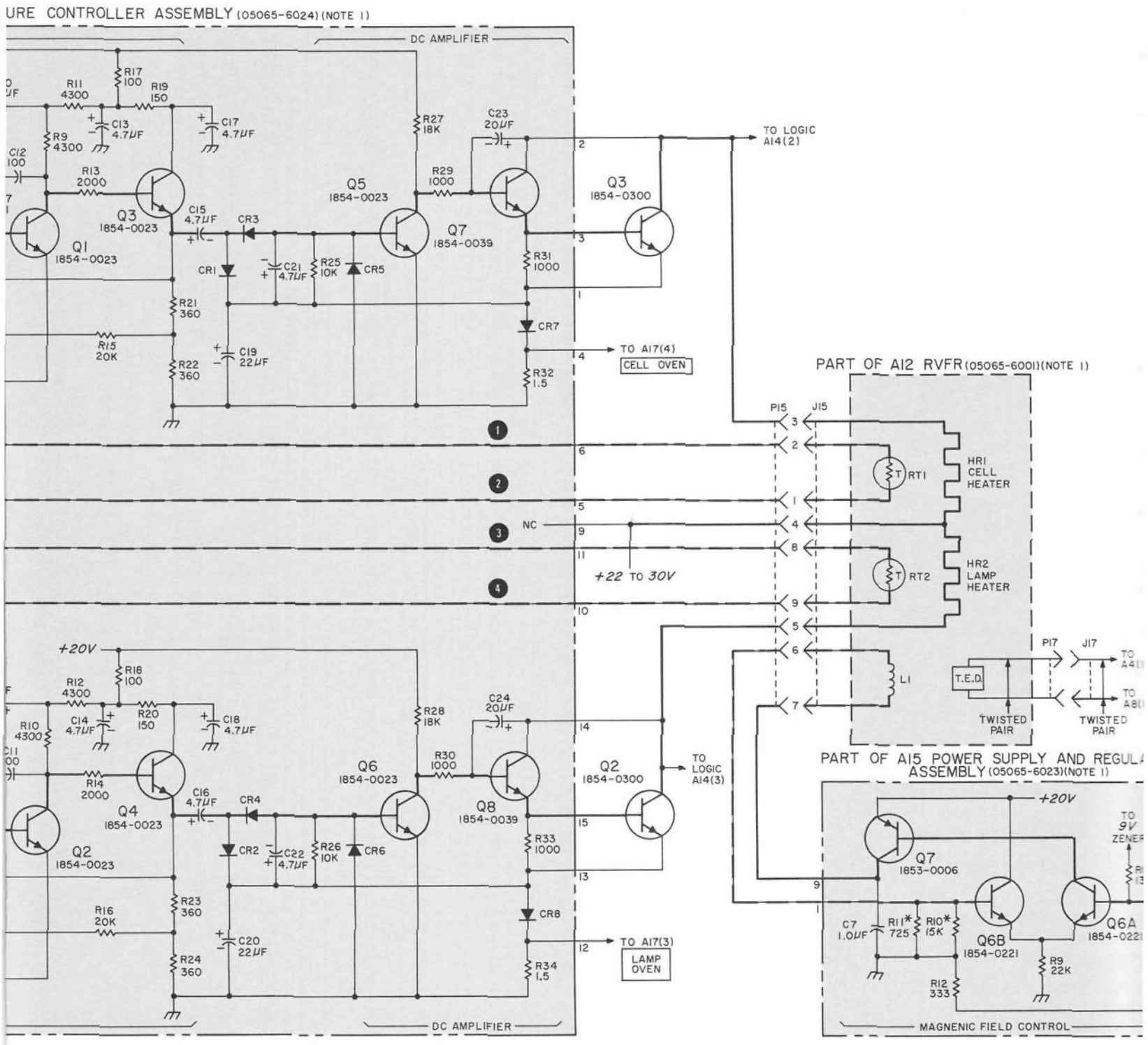
URE CONTROLLER ASSEMBLY (05065-6024) (NOTE 1)
DC AMPLIFIER
R17 100
R11 4300
R19 150
C13 4.7μF
C17 4.7μF
R9 4300
C12 100
R13 2000
Q3 1854-0023
C15 4.7μF
CR3
Q1 1854-0023
CR1
C21 4.7μF
R25 10K
CR5
R21 360
R15 20K
R22 360
C19 22μF
R27 18K
C23 20μF
Q5 1854-0023
R29 1000
Q7 1854-0039
Q3 1854-0300
R31 1000
CR7
R32 1.5
TO LOGIC AI4(2)
TO AI7(4)
CELL OVEN
PART OF AI2 RVFR (05065-6001) (NOTE 1)
PI5
JI5
HR1 CELL HEATER
RT1
HR2 LAMP HEATER
RT2
NC
+22 TO 30V
LI
T.E.D.
PI7
JI7
TWISTED PAIR
TWISTED PAIR
+20V
R18 100
R12 4300
R10 4300
C14 4.7μF
R20 150
C18 4.7μF
R14 2000
C16 4.7μF
CR4
Q4 1854-0023
Q2 1854-0023
CR2
C22 4.7μF
R26 10K
CR6
R28 18K
C24 20μF
Q6 1854-0023
R30 1000
Q8 1854-0039
Q2 1854-0300
TO LOGIC AI4(3)
R33 1000
CR8
R23 360
R16 20K
R24 360
C20 22μF
R34 1.5
TO AI7(3)
LAMP OVEN
DC AMPLIFIER
PART OF AI5 POWER SUPPLY AND REGULA ASSEMBLY (05065-6023) (NOTE 1)
+20V
TO 9V ZENER
Q7 1853-0006
C7 1.0μF
RII* 725
RIO* 15K
Q6B 1854-0221
Q6A 1854-022
R9 22K
RI2 333
MAGNENIC FIELD CONTROL

Figure

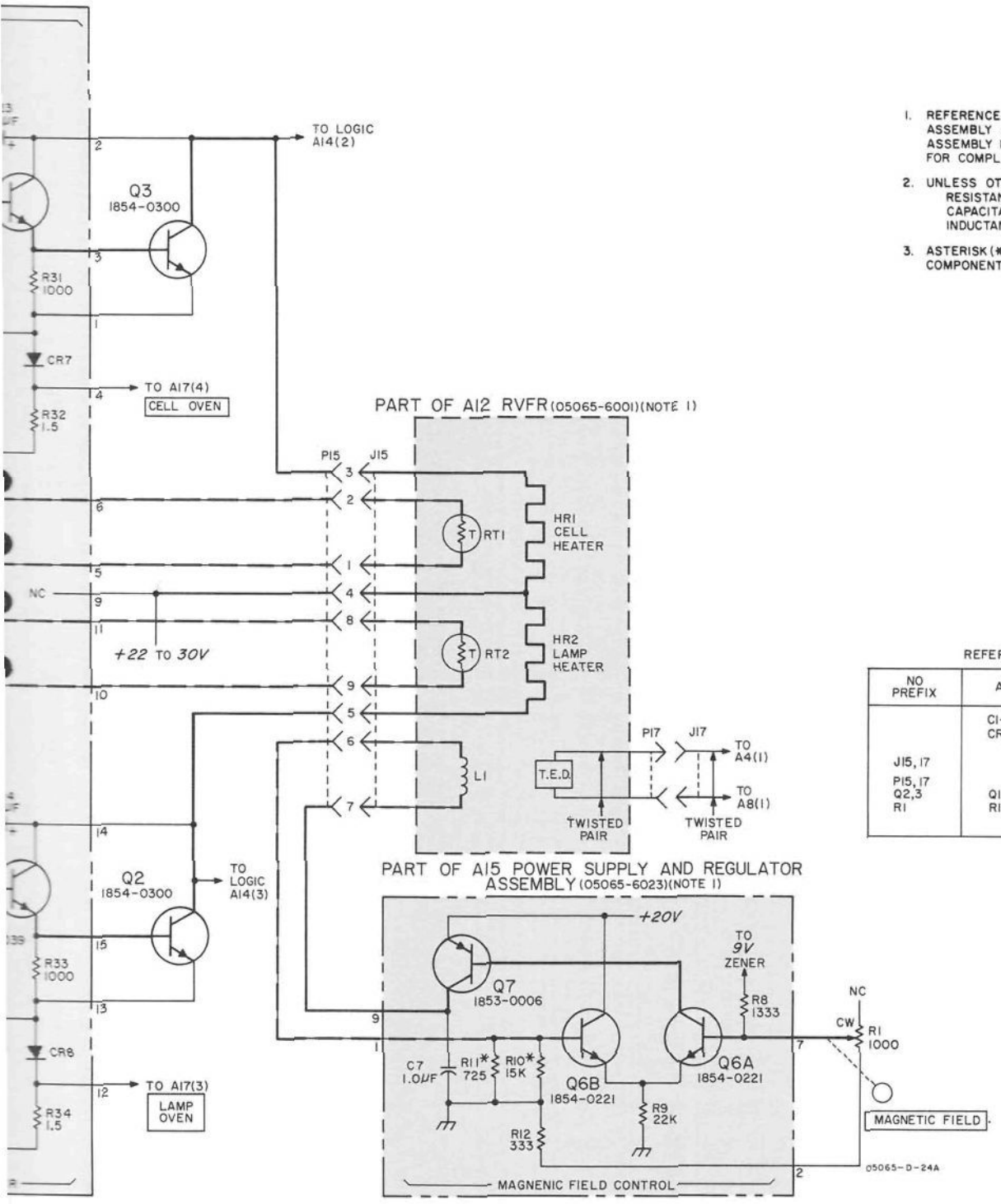

NOTES

1. REFERENCE DESIGNATIONS WITHIN THIS ASSEMBLY ARE ABBREVIATED. ADD ASSEMBLY NUMBER TO ABBREVIATION FOR COMPLETE DESCRIPTION.
2. UNLESS OTHERWISE INDICATED: RESISTANCE IN OHMS; CAPACITANCE IN PICOFARADS; INDUCTANCE IN MICROHENRIES
3. ASTERISK (*) INDICATES SELECTED COMPONENT, AVERAGE VALUES SHOWN

REFERENCE DESIGNATIONS

NO PREFIX	A11	A12	A15
	C1-24 CR1-8		C7
J15, 17		HR1,2	
P15, 17		L1	
Q2,3	Q1-8	T.E.D.	Q6,7
R1	R1-34	RT1,2	R8-12

Figure 8-21. A11 RVFR Temperature Controller Assembly

RVFR (RUBIDIUM VAPOR FREQUENCY REFERENCE) ASSEMBLY A12 THEORY

The A12 RVFR Assembly is a sealed package which should only be serviced at the factory. To remove, see removal instructions. For a detailed discussion of the frequency standardizing process, see Section 4-1, Theory.

The A12 RVFR Assembly which produces the frequency reference is housed in a triple magnetic shield to prevent frequency shifts by external magnetic fields. Isolation from ambient temperature is provided by two separate ovens which provide regulated temperature for; (1) the Rb^{87} lamp and lamp oscillator and, (2) the Rb^{87} filter cell and the Rb^{87} absorption cell. Oven currents for the LAMP OVEN and CELL OVEN can be monitored with the CIRCUIT CHECK switch.

The main components of A12 Assembly are as follows:

a. The magnetic shields.

b. The temperature ovens each with a temperature sensor and heater.

c. The Rb^{87} lamp and oscillator circuit which produces 90 MHz to excite the lamp.

d. The microwave cavity housing the Rb^{87} absorption cell, the solar cell which detects the light output of the Rb^{87} absorption cell, and the coupler which couples the 6.834685...GHz excitation into the microwave cavity.

e. The step-recovery diode which produces the 114th harmonic of 60 MHz -5.315...MHz (6.834685... GHz) to excite the microwave cavity.

A12 MAINTENANCE

NORMAL OPERATION

a. Inputs:

1) 60 MHz at approximately 1 V or greater from A3 Assembly. Also 5.315...MHz at approximately 20 mV on same cable.

2) Approximately 18 Vdc at J15 (3 and 5) from A11 Temperature Controller Assembly for cell and lamp heaters.

3) Approximately 2½ to 6 mA at J15(6) from A15 Power Regulator Assembly. This current creates the magnetic field inside the RVFR to control its frequency.

b. Outputs: Under normal operation with sufficient RF power applied, the output of A7P1 will be:

1) At resonance, 274 Hz at a signal level of approximately 3 nanoamperes.

2) Slightly off resonance, 137 Hz at a signal level of approximately 5 milliamperes.

3) Completely off resonance, nothing.

4) Dc photo induced current of approximately 50μa.

OPERATIONAL CHECK

a. Because of the extremely low signal level outputs from the RVFR and, because of the specialized nature of the drive signals, the operational check of the RVFR requires that the driving and amplifying circuits associated with the RVFR work properly. Thus, the operational check for the RVFR may include operational checks of several other assemblies.

b. Procedure:

1) Check lamp and cell ovens by placing a hand on the RVFR Assembly. It should be warm to the touch. Also check CIRCUIT CHECK meter in the CELL OVEN and LAMP OVEN positions. Meter should read between 15 and 35 for both positions.

2) Set CIRCUIT CHECK meter to PHOTO I. Meter should read 25 to 50. If it does, go to Step 3. If not proceed as described in the Circuit Checks, Table 5-3.

3) Magnetic field current check. Use clip-on milliammeter such as HP 428B and measure output current at A15(9). It should be between 2½ and 6 mA and be controllable from the front panel MAGNETIC FIELD control.

NOTE

Lack of magnetic field current will not affect the signal output of the RVFR. This current controls only the resonant frequency of the RVFR.

c. RVFR signal test:

1) Connect test setup as shown in the following figure:

RVFR Test Setup

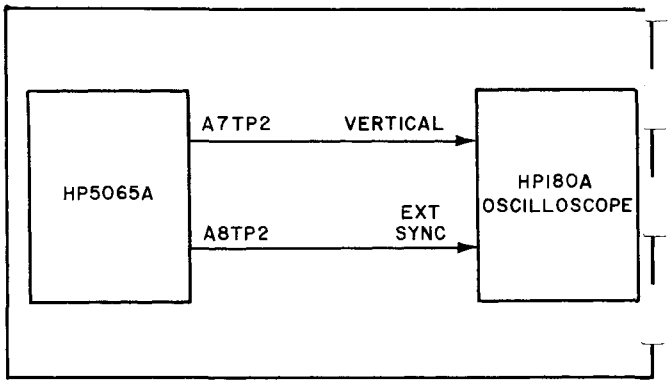

2) Set scope sweep to 2 msec/cm and vertical sensitivity for 50 mV/cm. Adjust scope for external sync from signal at A8TP2.

3) Tune OSC FREQ ADJ COARSE for a signal indication on scope. The normal indication as the oscillator is tuned through the RVFR resonance is the appearance of a 137 Hz sine wave; it will increase and then decrease in amplitude, and become 274 Hz at a lower amplitude. It will then become 137 Hz which will again increase and then decrease in amplitude and disappear. If there is no signal go to step 5. Tune the oscillator for maximum undistorted 274 Hz signal, and set CIRCUIT CHECK meter to 2ND HARMONIC. If reading on meter is significantly below that which is normal for the instrument, the instrument should be completely realigned as described in LOOP ALIGNMENT PROCEDURE of Section 5-19.

4) If signal on scope as noted above (or 2ND HARMONIC as noted on front panel meter) is excessively noisy, the signal-to-noise ratio of RVFR should be rechecked as described in Section 5-26 of the instrument alignment procedure. If signal-to-noise ratio is not above 250, the RF alignment should be checked per Section 5-25 of the instrument alignment procedure. The signal-to-noise ratio should then be rechecked. If the signal-to-noise ratio is still less than 250, the RVFR should be replaced. Even with a signal-to-noise ratio of less than 250, the instrument will remain on frequency; however, the short term stability of the instrument will be out of specifications.

5) If no signal was observed in step 3, it indicates trouble in one of several places:

   (a) Preamplifier in A7 Assembly not working.

   (b) RF output from A3 Assembly low in amplitude or pi-matching network mistuned.

   (c) A1 Synthesizer output off frequency or too low in amplitude.

   (d) No 137 Hz modulation from A8 Assembly.

   (e) Defective RVFR.

6) Items (a) through (d) can be easily checked by referring to the individual maintenance sections. If these circuits are OK, it indicates that the RVFR is probably defective and should be replaced. To check these circuits proceed as follows:

   (a) With the instrument set up as shown in the RVFR test setup illustration and oscilloscope setup per preceding step c(2), remove plug A7P1. Touch the center conductor of A7J1 with a small piece of metal such as a piece of solder. A large signal should appear on the scope. This indicates the preamplifier is OK.

   (b) Check RF output of A3 Multiplier Assembly by following procedure in the A3 Operational Check.

   (c) Check amplitide and frequency of synthesizer output at end of cable at A3P5. Amplitude should be approximately 100 mV and the correct frequency can be found in Table 3-6 after noting Thumbwheel and slide switch settings on the A1 Assembly.

   (d) Remove A3P1 and measure the 137 Hz modulation signal present at the end of the cable at A3P1. If signal OK at this point remove and disassembly A3 Assembly. Check diodes A3CR3, 4, 5, and 6. Reconnect cable to A3J1 and +20 V(R). Check signal at CR3 (anode).

7) If all tests to this point are OK, the RVFR is probably defective and should be replaced.

A12 RVFR ASSEMBLY REMOVAL AND REPLACEMENT

a. Disconnect all external power sources including batteries.

b. Remove top and bottom instrument covers.

c. Disconnect RVFR cable from A3J4 on Multiplier Assembly A3.

d. Disconnect RVFR cable from A7J1 on AC Amplifier Assembly A7.

e. Locate the twisted pair of black and red wires from the RVFR Assembly. Disconnect the red wire at socket XA4 pin 1 and the black wire at XA8 pin 1.

NOTE

DO NOT disconnect the diode connected between XA4(1) and XA8(1).

f. Disconnect A12J15 and A12J16 from chassis plugs.

g. Remove four nuts and lockwashers holding the RVFR unit in place and withdraw the assembly from the top of the instrument.

NOTE

When packing for return to the factory, pack carefully for maximum shock cushioning and label shipping package "FRAGILE". If possible, use packing from replacement RVFR unit.

h. Handle replacement RVFR assembly carefully while unpacking and installing. Note two resistors packaged with this Assembly. These are the calibration resistors for the A11 Temperature Regulator Assembly and are required to provide proper operating temperatures for cell and lamp areas of the replacement A12 RVFR Assembly. Install the A12 Assembly in the reverse order of the above removal steps, making sure the four lock washers are in place.

i. Remove the A11 Temperature Regulator circuit board and replace A11R5 and A11R6 with the new R5 and R6 calibration resistors.

j. Install new Power Supply Regulator Assembly supplied with replacement RVFR Assembly.

k. Locate the twisted pair of black and red wires from the RVFR Assembly. Solder the black wire to pin 1 of socket XA8 and the red wire to pin 1 of socket XA4.

l. After the A12 RVFR Assembly has been replaced the instrument should be turned on and warmed up for at least four hours before following the LOOP ALIGNMENT PROCEDURE in paragraphs 5-19 through 5-31.

NOTE

If the A1 synthesizer thumbwheel setting are changed or service is performed on A14, allow 1 minute of recovery time before attempting to place in the continuous operation mode.

BUFFER AMPLIFIER ASSEMBLY A13 THEORY

This assembly has two buffer amplifier circuits which deliver 1 volt (into 50 ohms), 5 MHz outputs. One output goes to A1 Synthesizer Assembly and the other output to front and rear 5 MHz output jacks.

R1 provides a 50-ohm input at J1. Buffer amplifier stage Q2 amplifies the input 5 MHz signal for a 1-volt, 5 MHz output at J3. Buffer Amplifier stages Q1 and Q2 provide a 1-volt, 5 MHz output at J4 for the rear 5 MHz output and at J2 for the front panel 5 MHz output. Additionally, Q3 output is rectified by CR2 and filtered by C11, R17, and C12 for a dc output to the 5 MHz position of the CIRCUIT CHECK meter. Bias voltage for all three amplifying stages is provided by Zener Diode CR1. Selected capacitances C7 and C8 provide tuning for T1 and T2 respectively. The +20 volt supply is decoupled by L1 and C1.

A13 MAINTENANCE

NORMAL OPERATION

a. Input signal is 1V rms.

b. Output at J3 is approximately 3V peak-to-peak into an open circuit.

c. Output at J4 and J2 is 1V rms into a 50 ohm load.

d. Output at C2 is approximately 90 to 120μ a for operation of front panel meter.

No adjustments are provided.

ASSEMBLY REPLACEMENT

No adjustments are needed after repair or replacement of this assembly.

Figure 8-22
A12 RVFR ASSEMBLY AND BUFFER
A13 AMPLIFIER ASSEMBLY

(See Page 8-59)

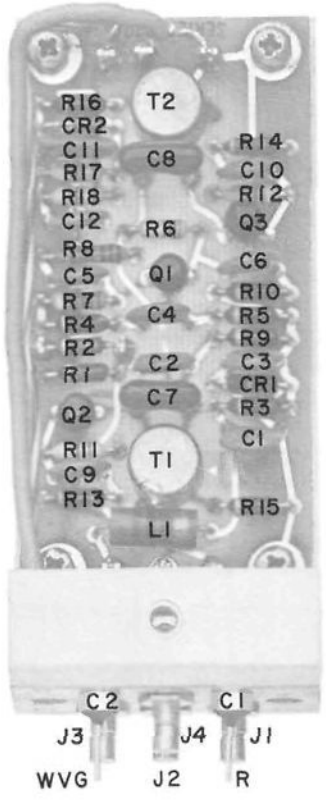
R16
CR2
C11
R17
R18
C12
R8
C5
R7
R4
R2
R1
Q2
R11
C9
R13
T2
C8
R6
Q1
C4
C2
C7
T1
L1
R14
C10
R12
Q3
C6
R10
R5
R9
C3
CR1
R3
C1
R15
C2
C1
J3
J4
J1
WVG
J2
R

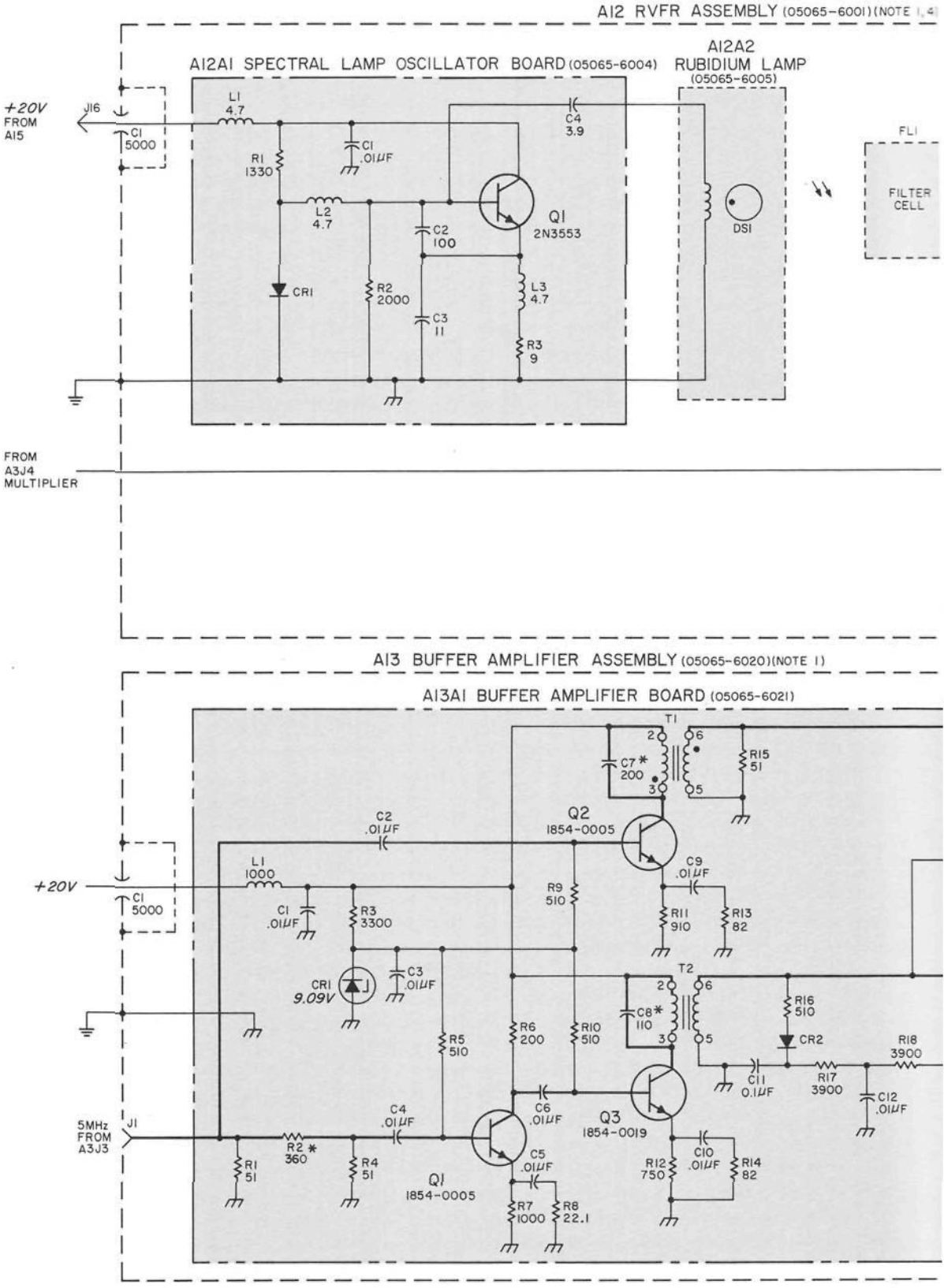
A12 RVFR ASSEMBLY (05065-6001)(NOTE 1,4)
A12A1 SPECTRAL LAMP OSCILLATOR BOARD (05065-6004)
A12A2 RUBIDIUM LAMP (05065-6005)
+20V FROM A15
J16
C1 5000
L1 4.7
C1 .01μF
C4 3.9
R1 1330
L2 4.7
C2 100
Q1 2N3553
DS1
FL1
FILTER CELL
CR1
R2 2000
C3 11
L3 4.7
R3 9
FROM A3J4 MULTIPLIER
A13 BUFFER AMPLIFIER ASSEMBLY (05065-6020)(NOTE 1)
A13A1 BUFFER AMPLIFIER BOARD (05065-6021)
T1
C7* 200
R15 51
C2 .01μF
Q2 1854-0005
C9 .01μF
+20V
L1 1000
C1 5000
C1 .01μF
R3 3300
R9 510
R11 910
R13 82
CR1 9.09V
C3 .01μF
T2
C8* 110
R16 510
R5 510
R6 200
R10 510
CR2
R18 3900
C11 0.1μF
R17 3900
C12 .01μF
C6 .01μF
Q3 1854-0019
5MHz FROM A3J3
J1
C4 .01μF
R2* 360
C5 .01μF
C10 .01μF
R12 750
R14 82
R1 51
R4 51
Q1 1854-0005
R7 1000
R8 22.1

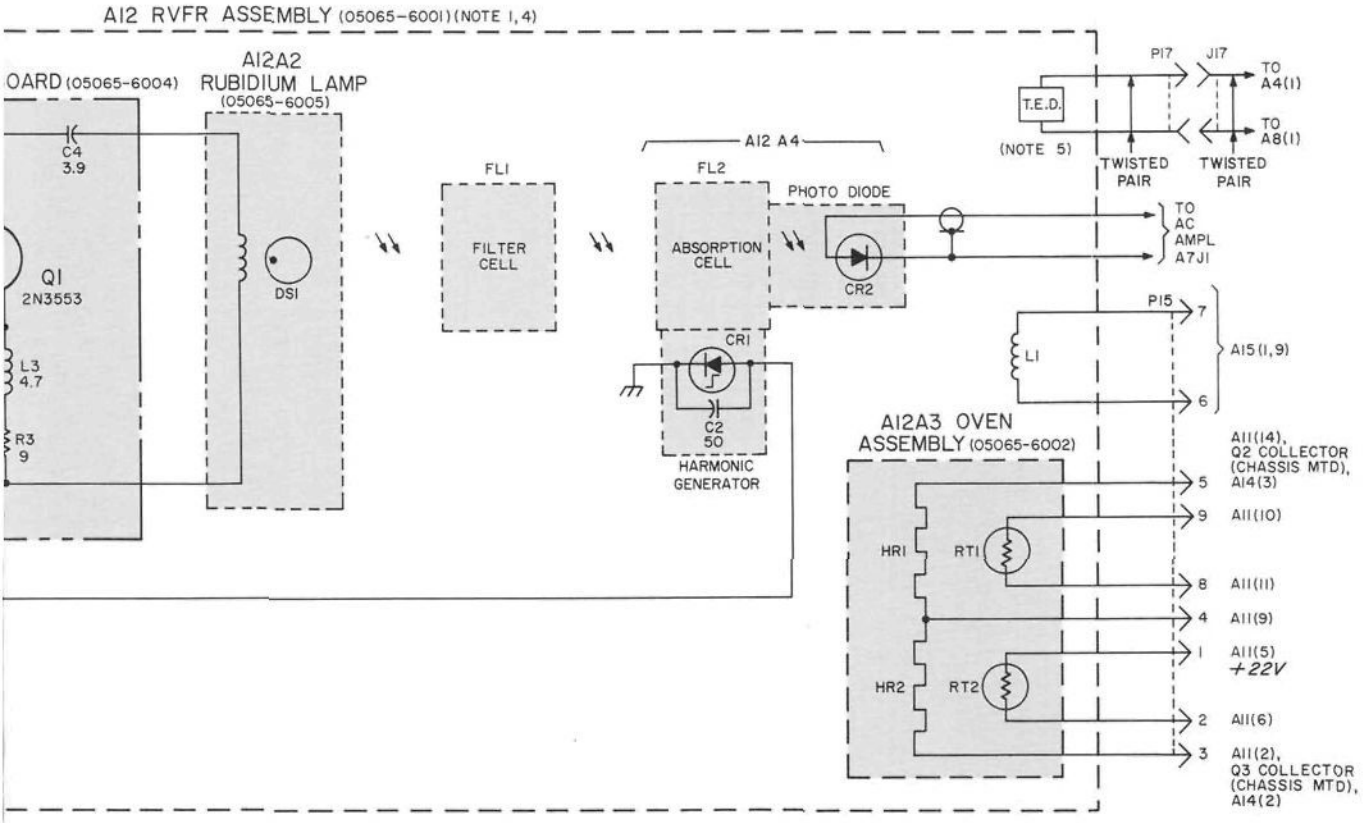

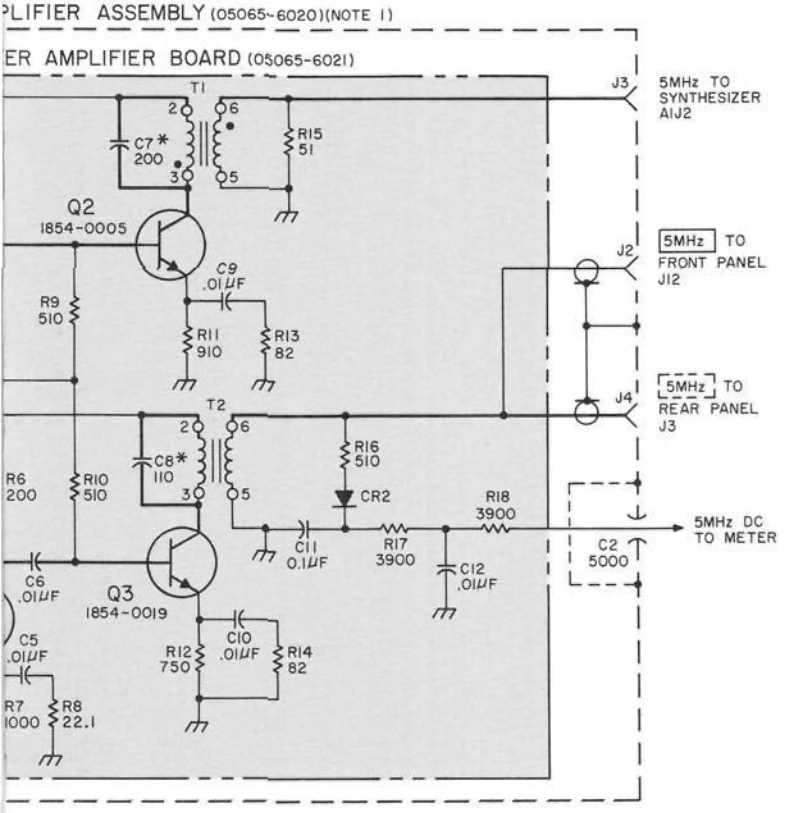

REF

NO PREFIX	AI2	AI2AI
	C1	C1-4 CR1
	FL1	
J15,17 P17	J2 L1	L1-3
	T.E.D.	Q1 R1-3

DELETED:
J2

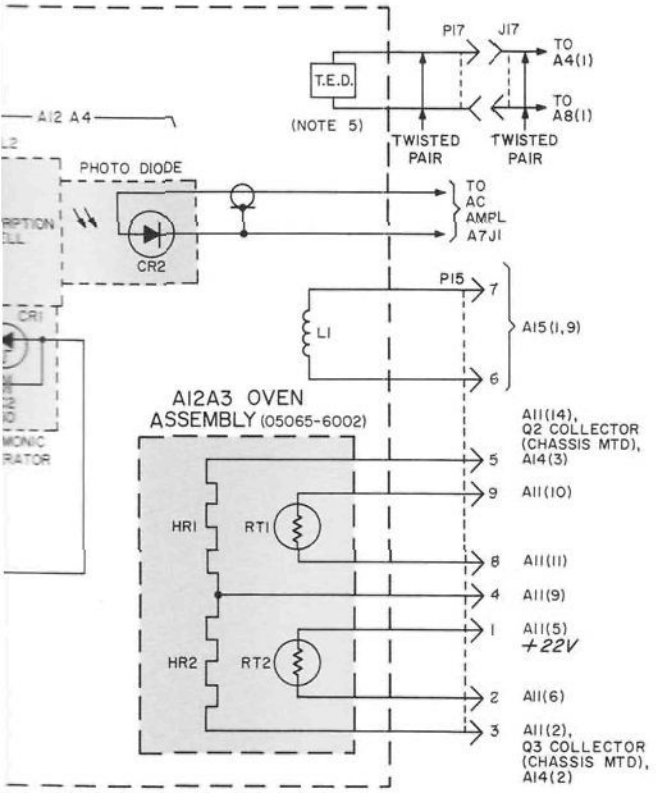

NOTES

1. REFERENCE DESIGNATIONS WITHIN THIS ASSEMBLY ARE ABBREVIATED. ADD ASSEMBLY NUMBER TO ABBREVIATION FOR COMPLETE DESCRIPTION.
2. UNLESS OTHERWISE INDICATED: RESISTANCE IN OHMS; CAPACITANCE IN PICOFARADS; INDUCTANCE IN MICROHENRIES
3. ASTERISK (*) INDICATES SELECTED COMPONENT, AVERAGE VALUES SHOWN
4. NOT FIELD REPAIRABLE.
5. T.E.D. = THERMO ELECTRIC DEVICE

REFERENCE DESIGNATIONS

NO PREFIX	A12	A12A1	A12A2	A12A3	A12 A4	A13	A13A1
	C1	C1-4 CR1			C2 CR1,2	C1,2	C1-12 CR1-2
	FL1		DS1		FL2		
				HR1,2			
J15,17 P17	J2 L1	L1-3				J1-4	L1
	T.E.D.	Q1 R1-3					Q1-3 R1-18 T1,2
				RT1,2			

DELETED:
J2

05065-D-25A

Figure 8-22. A12 RVFR Assembly and Buffer A13 Amplifier Assembly

LOGIC ASSEMBLY A14 THEORY

Logic Assembly A14 monitors various circuits and controls front panel CONTINUOUS OPERATION and INTEGRATOR LIMIT lights. These two front-panel lights give a constant indication of instrument operation. A14 Functional Diagram is a diagram of the A14 Logic Circuits.

The separate logic functions fed to A14 are listed, together with the normal and abnormal conditions which control the CONTINUOUS OPERATION and INTEGRATOR LIMIT lights, in the table of A14 logic inputs.

With a normal "on frequency" condition, CR13 input is "H" with CR13 conducting, Q18 conducting, and the CONTINUOUS OPERATION light on. At this time, all stages connecting to CR13 input are nonconducting. When Q4, Q14, or Q7 conducts in response to a "no go" logic input, CR13 input goes "L" and stops conducting, Q18 turns off and the CONTINUOUS OPERATION light goes out.

Q14 is noninverting so that a "H" input in normal operation corresponds to a "H" at Q14 output which connects to CR13. Correspondingly, Q15 input is "L" for normal operation. Summarizing, the conducting transistors for a normal "on frequency" condition are: Q5, Q9, Q6, Q8, Q10, Q12, Q3, and Q18; CR13 also conducts. Nonconducting transistors for a normal "on frequency" condition are: Q16, Q4, Q15, Q14, Q2, and Q7.

The cell oven and lamp oven inputs are the voltages at the inputs to the cell and lamp oven heaters. Since these heaters are connected to the dc supply voltage (+22 to 30 volts) these inputs go "L" with an increase in heater current and "H' with no heater current.

With a cell oven "no heater" condition, the cell oven input is near zero volts and Q5 is turned off inpressing an "H" signal on Q15 and the CONTINUOUS OPERATION light is turned off.

The lamp oven input works in a similar manner as the preceeding for a "no-heater" condition with Q10 and Q12; and for an "over-heat" condition with Q9.

The 2nd Harmonic input to Q3 is a positive dc voltage when "on frequency" resulting in a normal "L" input to Q15. When the system is not operating correctly and 2nd harmonic drops out, Q3 input is "L" and a resulting "H" at Q15 input turns off the CONTINUOUS OPERATION lamp.

The Synthesizer lock signal input is only present when there is no phase lock in the Synthesizer Assembly and consequently the synthesizer output is "off" frequency. The Synthesizer "no go" input is "H" which causes Q16 to conduct, delivering a "L" input to Q14 and the CONTINUOUS OPERATION light is turned off.

The light disable function that comes from the FUNCTION switch is developed when the FUNCTION switch is placed in OPER connecting +20 volts to C2. The result is a short-duration positive pulse at Q4 input. Q4

A14 Functional Diagram

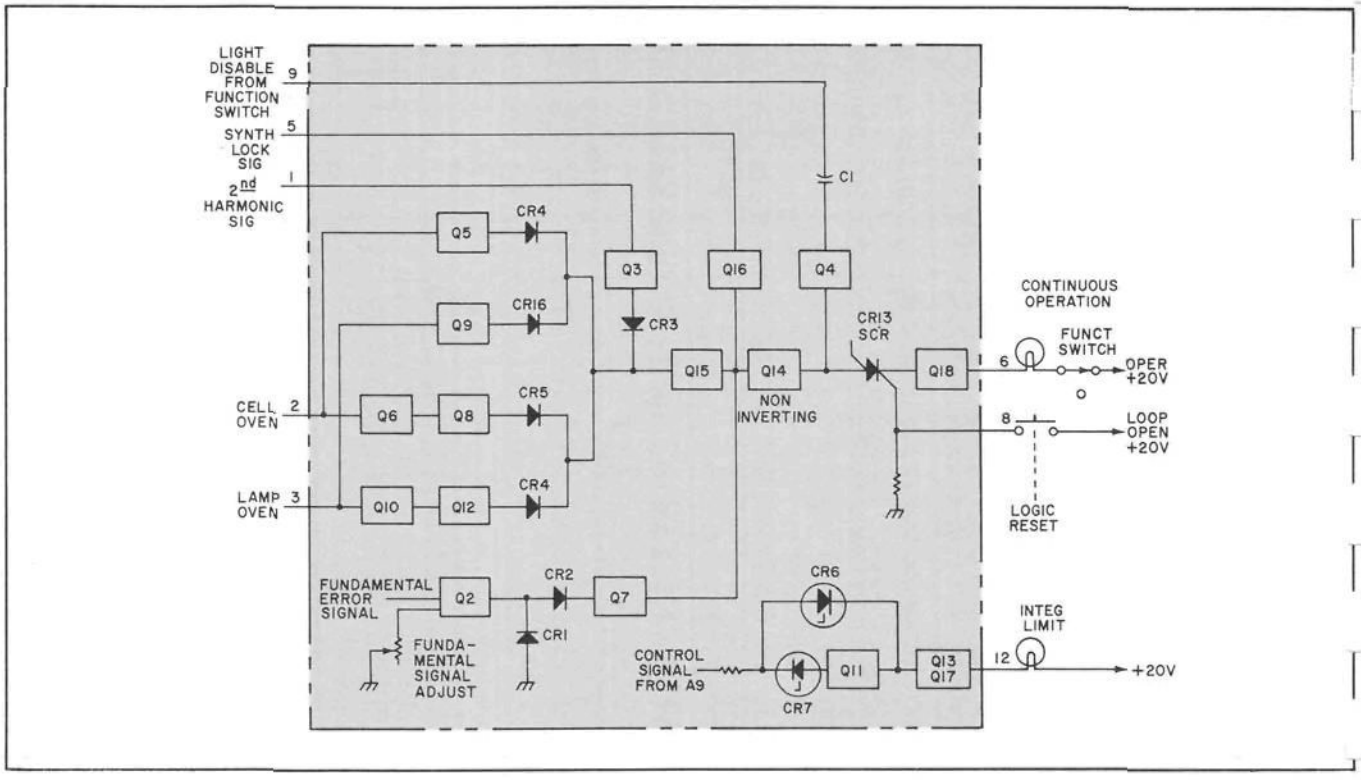

output is a negative spike which turns off CR13. If all inputs to A14 are "go" at this time, the LOGIC RESET pushbutton will cause CR13 to conduct when it is depressed. Q18 will then conduct turning on the CONTINUOUS OPERATION light. This circuit insures that the CONTINUOUS OPERATION light will not come on automatically when the FUNCTION switch is set at OPER.

At the fundmental error input, there is no 137 Hz signal when "on frequency". 137 Hz appears for an "off frequency" condition. After amplification by Q2, the 137 Hz input is rectified by CR1 and CR2 to provide an "H" input to Q7 which delivers a "L" input to CR13 to cut it off, thereby disabling the CONTINUOUS OPERATION light.

A14 MAINTENANCE

NORMAL OPERATION

The A14 Assembly monitors several voltages throughout the 5065A and either extinguishes the CONTINUOUS OPERATION light or enables the INTEGRATOR LIMIT light if these voltages should deviate from prescribed limits.

Loss of the continuous operation light means that the 5065A is probably off frequency. The light will not come back on by itself; the logic reset button must be pushed.

NOTE

If the A1 synthesizer thumbwheel setting are changed or service is performed on A14, allow 1 minute of recovery time before attempting to place in the continuous operation mode.

The table below summarizes the normal and abnormal voltages that operate the A14 Assembly.

OPERATIONAL CHECK

a. Remove ac and dc power.

b. Remove A11 Assembly and mount on extender board.

c. Reapply power and wait a few minutes for instrument to stabilize. Press LOGIC RESET button. Continuous OPERATION light will come on.

d. Set meter to CELL OVEN.

e. Momentarily short Q5 collector (case) to ground. The meter should fall to zero and the CONTINUOUS OPERATON light will go out.

f. Push logic reset button. Momentarily short Q5 base to ground. Meter reading should increase and CONTINUOUS OPERATION light will go out.

g. Press LOGIC RESET button. Set meter to LAMP OVEN. Momentarily connect Q6 collector (case) to ground. Meter should drop to zero and CONTINUOUS OPERATION light will go out.

h. Press logic reset button. Momentarily connect Q6 base to ground. Meter reading will increase and CONTINUOUS OPERATION light will go out.

i. Remove ac and dc power and replace A11 in its socket. Restore power.

j. Perform checks of Paragraph 5-31(e).

A14 Operating Voltages

Pin No.	Signal Source	Normal Voltage	Voltage Required to Extinguish CONT. OP. Light		INTEGRATOR Limit Light On At
1	2nd Harmonic Signal Level	Approximately 8 Vdc	<1.1 Vdc		
2	Cell Oven Voltage	18 Vdc	< 5 Vdc	1 Vdc Less than Pin 7	
3	Lamp Oven Voltage	15 Vdc	< 5 Vdc	1 Vdc less than Pin 7	
5	Synthesizer Lock Alarm Circuit	<1.5 Vdc	5 Vdc		
9	Function Switch	20 Vdc	20 Vdc + Pulse		
11	137 Hz Error Signal	AC Noise	12 V p-p		
15	Quartz Oscillator Control	-14 to +7 dc			+2.5 Vdc or -5 Vdc

A14 Logic Table

Function	Normal Condition (Continuous Operation Light On)	Abnormal Condition (Causing Continuous Operation Light Off)
Cell Oven (Oven Off Signal)	Positive Voltage Approximately Halfway Between Ground and Dc Supply Voltage	"H"* causing Q8 to cut off and deliver an "H" input to Q15
Cell Oven (Oven Over-Heat Signal)	Same as above	"L"* causing Q5 to cut off and deliver an "H" input to Q15
Lamp Oven (Oven Off Signal)	Same as above	"H"* causing Q12 to cut off and deliver an "H" input to Q15
Lamp Oven (Oven Over-Heat Signal)	Same as above	"L"* causing Q12 to cut off and deliver an "H" input to Q15
2nd Harmonic Signal	"H" when "On Frequency"	"L" for absence of 2nd Harmonic when "off frequency"
Fundamental Error Signal (137 Hz)	"L" for minimum 137 Hz when "ON Frequency"	"H" for large amount of 137 Hz when "off frequency"
Synthesizer Lock Signal	"L" for absence of synthesizer logic input when "On Frequency"	"H" Synthesizer Lock Signal present indicating: (1) No Phase Lock (2) No 5.315...MHz
Light Disable Signal	When +20 volts connects to C2 in the OPER position of the FUNCTION switch, resulting positive spike is inverted by Q4 for a "no-go" negative spike which latches CR13 off and disables the CONTINUOUS OPERATION light until the LOGIC RESET pushbutton is depressed to turn on CR13	

*With respect to normal voltages.

Figure 8-23
A14 LOGIC ASSEMBLY

(See Page 8-63)

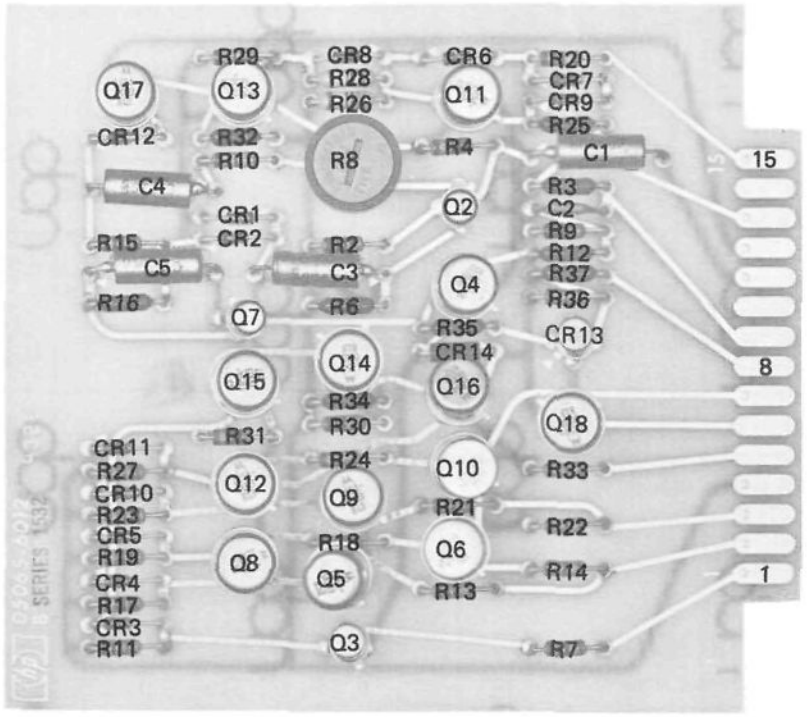
R29
CR8
CR6
R20
Q17
Q13
R28
Q11
CR7
R26
CR9
CR12
R32
R4
R25
C1
R10
R8
15
C4
R3
Q2
CR1
C2
CR2
R9
R15
R2
R12
C5
C3
Q4
R37
R16
R6
R36
Q7
R35
CR13
CR14
Q14
8
Q15
Q16
R34
Q18
R31
R30
CR11
R24
R27
Q12
Q10
R33
CR10
Q9
R21
R23
R22
CR5
R18
R19
Q8
Q6
R14
Q5
1
CR4
R13
R17
CR3
Q3
R7
R11

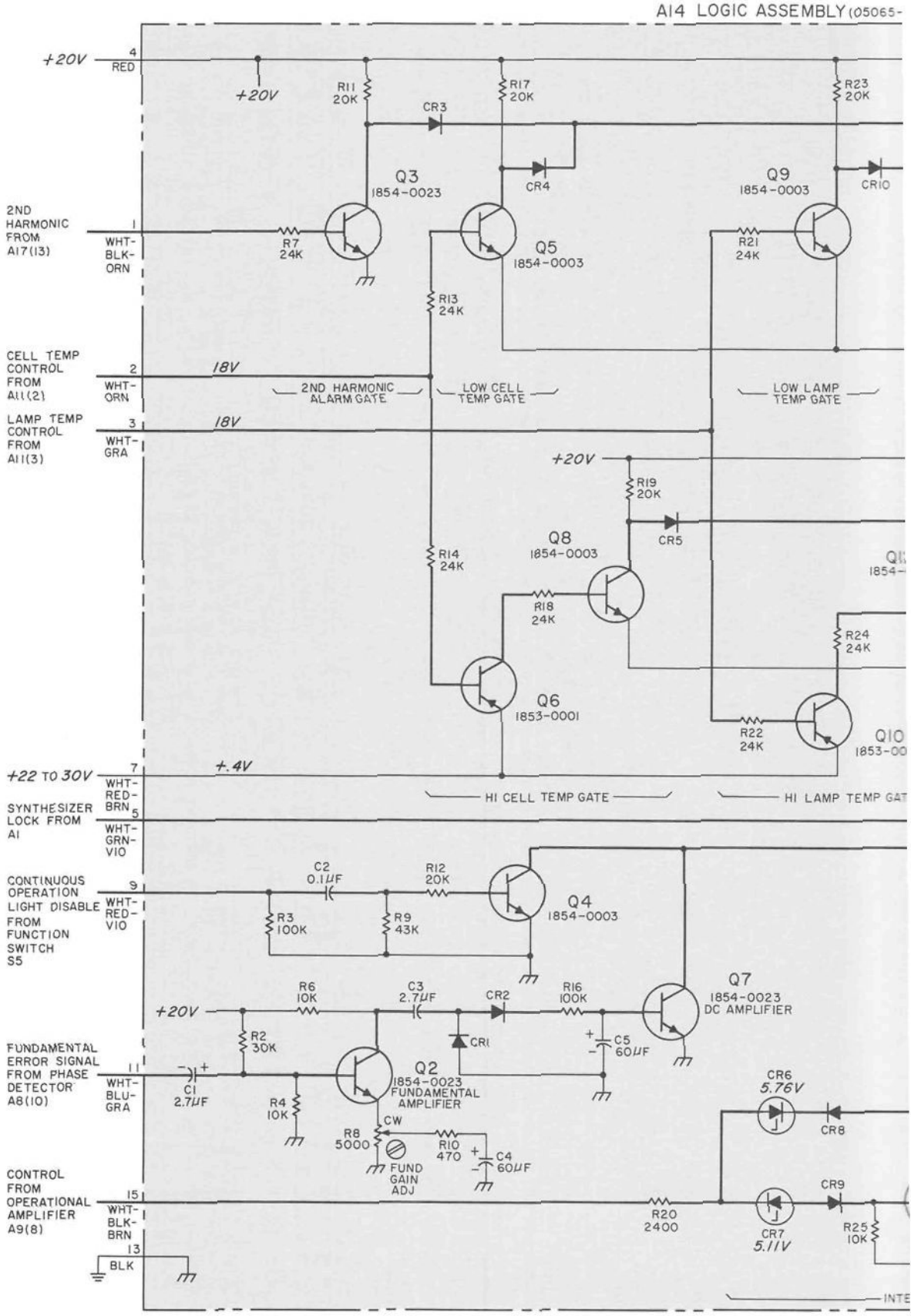
A14 LOGIC ASSEMBLY (05065-
+20V
4
RED
+20V
R11
20K
CR3
R17
20K
R23
20K
Q3
1854-0023
CR4
Q9
1854-0003
CR10
2ND HARMONIC FROM A17(13)
1
WHT-BLK-ORN
R7
24K
Q5
1854-0003
R21
24K
R13
24K
CELL TEMP CONTROL FROM A11(2)
2
WHT-ORN
18V
2ND HARMONIC ALARM GATE
LOW CELL TEMP GATE
LOW LAMP TEMP GATE
LAMP TEMP CONTROL FROM A11(3)
3
WHT-GRA
18V
+20V
R19
20K
CR5
R14
24K
Q8
1854-0003
R18
24K
R24
24K
Q6
1853-0001
R22
24K
+22 TO 30V
7
WHT-RED-BRN
+.4V
HI CELL TEMP GATE
HI LAMP TEMP GAT
SYNTHESIZER LOCK FROM A1
5
WHT-GRN-VIO
CONTINUOUS OPERATION LIGHT DISABLE FROM FUNCTION SWITCH S5
9
WHT-RED-VIO
C2
0.1µF
R12
20K
Q4
1854-0003
R3
100K
R9
43K
R6
10K
C3
2.7µF
CR2
R16
100K
Q7
1854-0023
DC AMPLIFIER
+20V
R2
30K
CR1
C5
60µF
FUNDAMENTAL ERROR SIGNAL FROM PHASE DETECTOR A8(10)
11
WHT-BLU-GRA
C1
2.7µF
R4
10K
Q2
1854-0023
FUNDAMENTAL AMPLIFIER
CR6
5.76V
CR8
R8
5000
CW
FUND GAIN ADJ
R10
470
C4
60µF
CONTROL FROM OPERATIONAL AMPLIFIER A9(8)
15
WHT-BLK-BRN
R20
2400
CR9
CR7
5.11V
R25
10K
13
BLK
INTE

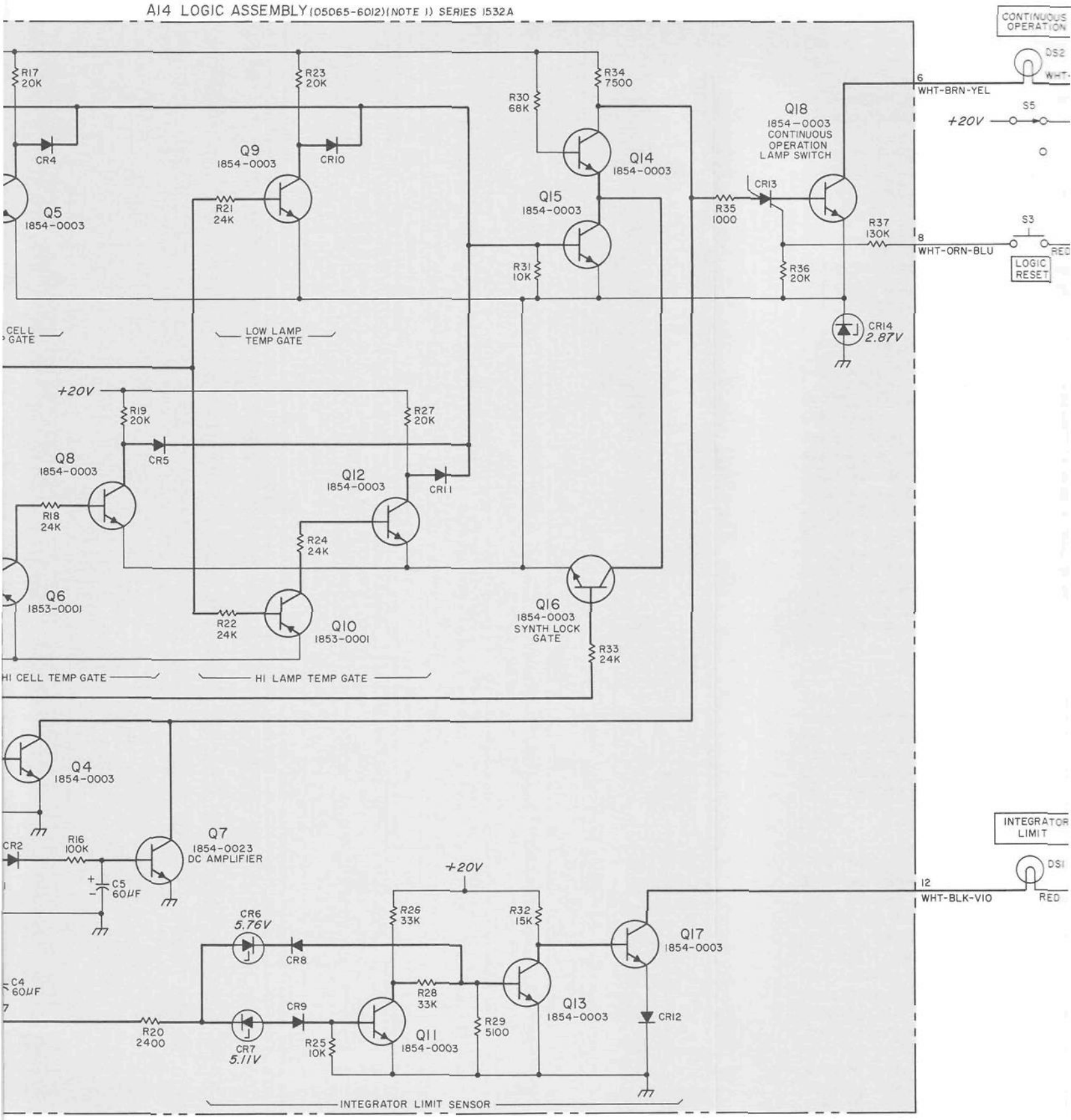
A14 LOGIC ASSEMBLY (05065-6012) (NOTE 1) SERIES 1532A
CONTINUOUS OPERATION
DS2
WHT-
6
WHT-BRN-YEL
S5
+20V
R17 20K
R23 20K
R34 7500
R30 68K
Q18 1854-0003 CONTINUOUS OPERATION LAMP SWITCH
CR4
Q9 1854-0003
CR10
Q14 1854-0003
Q5 1854-0003
R21 24K
Q15 1854-0003
CR13
R35 1000
R37 130K
S3
8
WHT-ORN-BLU
RED
LOGIC RESET
R31 10K
R36 20K
CELL GATE
LOW LAMP TEMP GATE
CR14 2.87V
+20V
R19 20K
R27 20K
CR5
Q8 1854-0003
Q12 1854-0003
CR11
R18 24K
R24 24K
Q6 1853-0001
Q16 1854-0003 SYNTH LOCK GATE
R22 24K
Q10 1853-0001
R33 24K
HI CELL TEMP GATE
HI LAMP TEMP GATE
Q4 1854-0003
INTEGRATOR LIMIT
DS1
12
WHT-BLK-VIO
RED
CR2
R16 100K
Q7 1854-0023 DC AMPLIFIER
C5 60μF
+20V
CR6 5.76V
R26 33K
R32 15K
Q17 1854-0003
CR8
C4 60μF
R28 33K
CR9
Q13 1854-0003
CR12
R29 5100
R20 2400
CR7 5.11V
R25 10K
Q11 1854-0003
INTEGRATOR LIMIT SENSOR

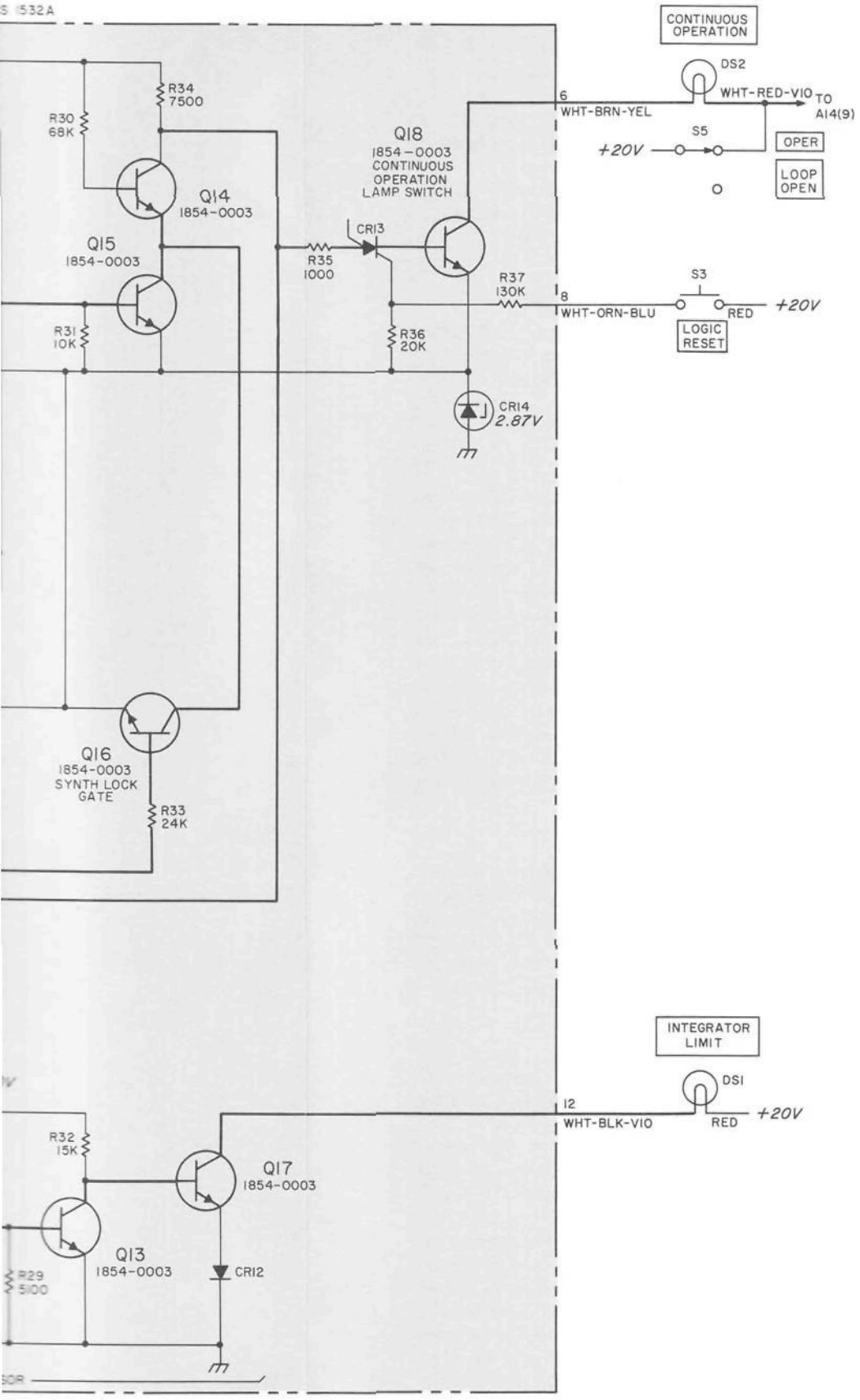

NOTES

1. REFERENCE DESIGNATIONS WITHIN THIS ASSEMBLY ARE ABBREVIATED. ADD ASSEMBLY NUMBER TO ABBREVIATION FOR COMPLETE DESCRIPTION.
2. UNLESS OTHERWISE INDICATED:
   RESISTANCE IN OHMS;
   CAPACITANCE IN PICOFARADS;

REFERENCE DESIGNATIONS

NO PREFIX	A14
DS1,2	C1-5 CR1-14 Q2-18 R2-4 6-37
S3,5	

05065-D-26

Figure 8-23. A14 Logic Assembly

POWER SUPPLY AND REGULATOR CIRCUIT A15 THEORY

The A15 Power Supply and Regulator Assembly provides regulated +20 V.

In addition, there are three other power supply circuits in the A15 Assembly:

a. The full-wave bridge rectifier, energized by chassis-mounted T1, which delivers +24 to 32 volts to the LC filter consisting of chassis-mounted L1, C1, and C2.

b. The magnetic field regulator which supplies dc current for the magnetic field winding in A12 RVFR Assembly according to the setting of the MAGNETIC FIELD control on the front panel.

c. The -20 volt supply.

In the +20 volt regulator, +24 to 32 volts connects to chassis-mounted Q1 and through A14(4) to the +20 volt regulator circuit. Regulated +20 volts connects to the voltage adjustment R17 which controls Q5A bias. The other side of differential amplifier Q5A and B is stabilized by Zener diode CR5 to provide a 9 volt reference. Q5 output is amplified by FET Q4, used as a source follower, and A15Q1 to provide bias control of chassis-mounted transistor Q1. In this way, Q1 output is held at +20 volts. Overcurrent protection is provided by the voltage drop of R2 which biases Q3 to drive Q2 and Q1; this turns off Q1. Ripple in the output at A15(8) is minimized by L2 and C11.

Full-wave bridge rectifier CR1 through CR4 is part of a basic power supply which includes chassis-mounted input transformer T1, and LC filter C1, C2, L1 and C7. The 24 to 32 volt output connects through a blocking diode on A18 circuit board to the 24 and 32 volt input of the +20 volt regulator circuit.

The magnetic field regulator consists of differential amplifier Q6A and B and Q7 which drives the magnetic field winding in A12 RVFR Assembly. This circuit works with the front-panel MAGNETIC FIELD dial to produce linear control of the resonant frequency of A12 RVFR Assembly. Since the resonance frequency is not directly proportional to magnetic field control, fixed resistances R8 and R12 pad the MAGNETIC FIELD potentiometer (R6) to provide the required linearity. Series reference resistors R10 and R11 provide Q6B with voltage information proportional to magnetic field winding current. Q6 differential amplifier drives Q7 to equalize Q6A, B base voltages. In this way, Q7 collector current through the magnetic field winding is a direct function of the voltage impressed on Q6A base by the front-panel MAGNETIC FIELD control.

In the -20 volt supply, +20 volts energizes the saturable transformer inverter circuit of Q8, Q9, and T1. The approximate 2 kHz output of T1 is full-wave rectified by CR6 and 7. C9 provides filtering. -20 volts connects to the output at A15(11) through voltage regulator Q10, whose base is referenced at about -20 volts by CR9A and B, and CR8.

A15 MAINTENANCE

NORMAL OPERATION

The A15 Assembly supplies the following voltages and currents to power the 5065A.

Pin No.	Voltage	Current
6	+20 V ± .2	700 mA
8	+20 V	130 mA
11	-20 V ± .2	25 mA
1,9 Adjustable	+2 to 4½	2.5 to 6 mA

In addition, the A15 Assembly has over-current protection circuit in the +20 V line.

OPERATIONAL CHECK

a. Using a dc voltmeter, check voltages at pins 6, 8, and 11. They should be as shown in the above table.

b. Connect voltmeter to pin 1 and (see NOTE) adjust MAGNETIC FIELD dial from 9 to 100. Voltage should be approximately as shown in the table.

NOTE

Be sure to note setting of MAGNETIC FIELD dial before making this adjustment. The dial should be returned to that setting after this test.

REPAIR AND ASSEMBLY REPLACEMENT

After making repairs, A15R17 should be adjusted. To do this place the A15 Assembly on the extender board provided and adjust R17 so that the voltage at A15(6) is 20 V ± .2 V.

When replacing A15 the output voltage should be adjusted as described above. In addition, A15R10 and R11 should be removed from the old board and installed on the new one. This will help maintain the same magnetic field calibration.

Figure 8-24
A15 POWER SUPPLY AND REGULATOR ASSEMBLY

(See Page 8-65)

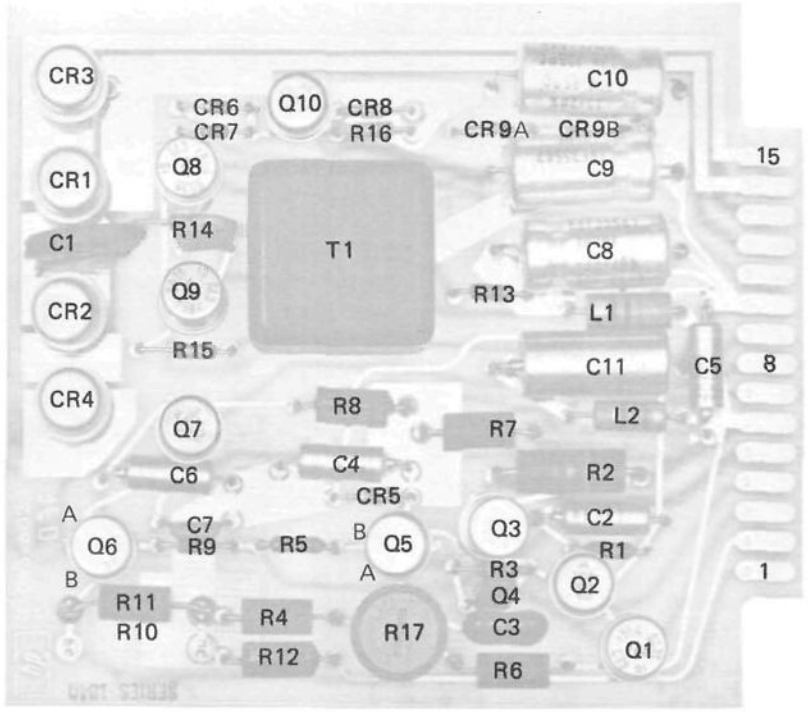
CR3
CR6
CR7
Q10
CR8
R16
CR9A
CR9B
C10
C9
15
CR1
Q8
C1
R14
T1
C8
Q9
R13
L1
CR2
R15
C11
C5
8
CR4
R8
Q7
R7
L2
C6
C4
R2
CR5
A
C7
B
Q3
C2
Q6
R9
R5
Q5
R1
B
A
R3
Q2
1
R11
Q4
R4
R17
C3
R10
Q1
R12
R6

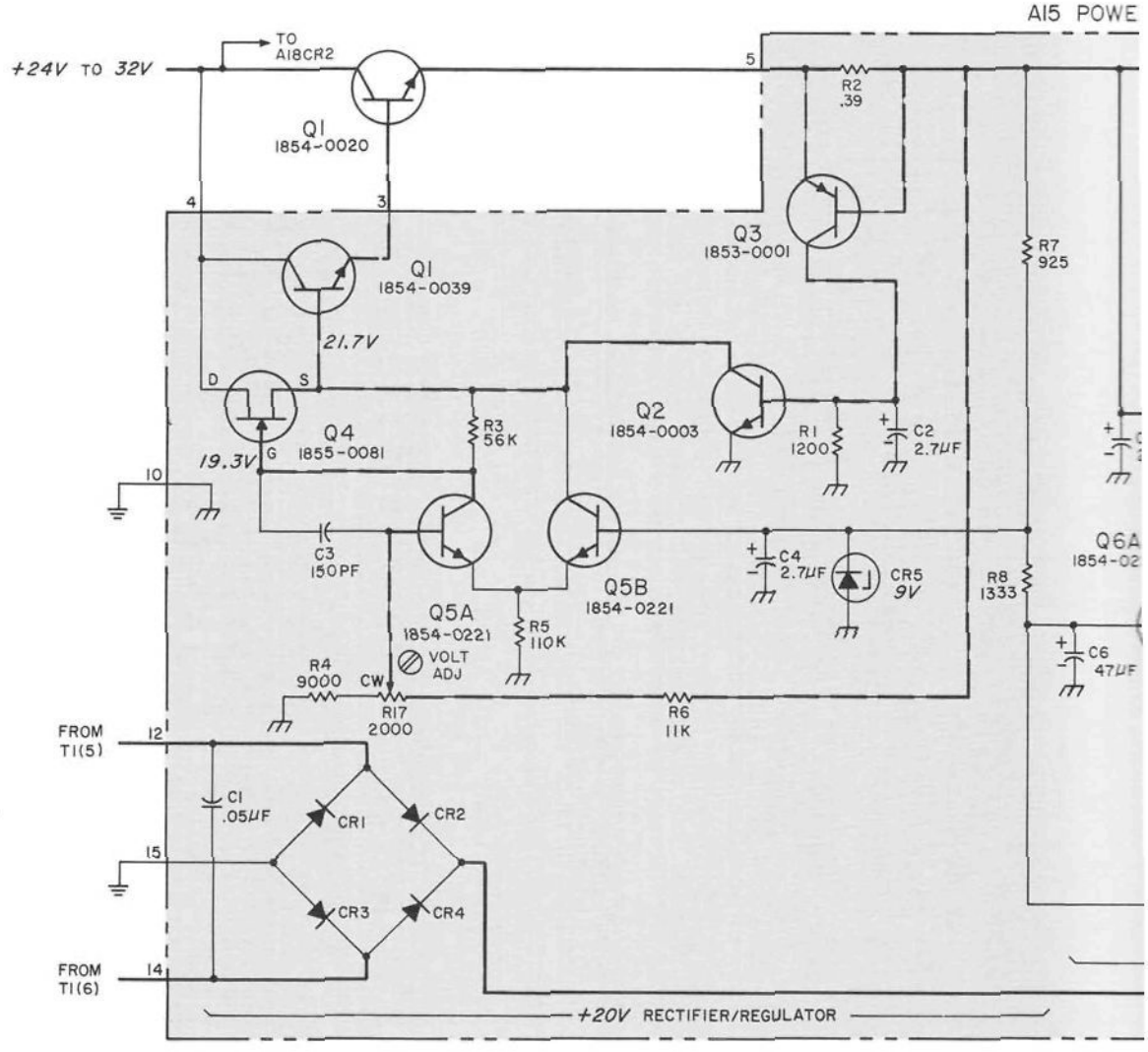

NOTES

1. REFERENCE DESIGNATIONS WITHIN THIS ASSEMBLY ARE ABBREVIATED. ADD ASSEMBLY NUMBER TO ABBREVIATION FOR COMPLETE DESCRIPTION.
2. UNLESS OTHERWISE INDICATED:
   RESISTANCE IN OHMS;
   CAPACITANCE IN PICOFARADS;
   INDUCTANCE IN MICROHENRIES
3. ASTERISK (*) INDICATES SELECTED COMPONENT, AVERAGE VALUES SHOWN

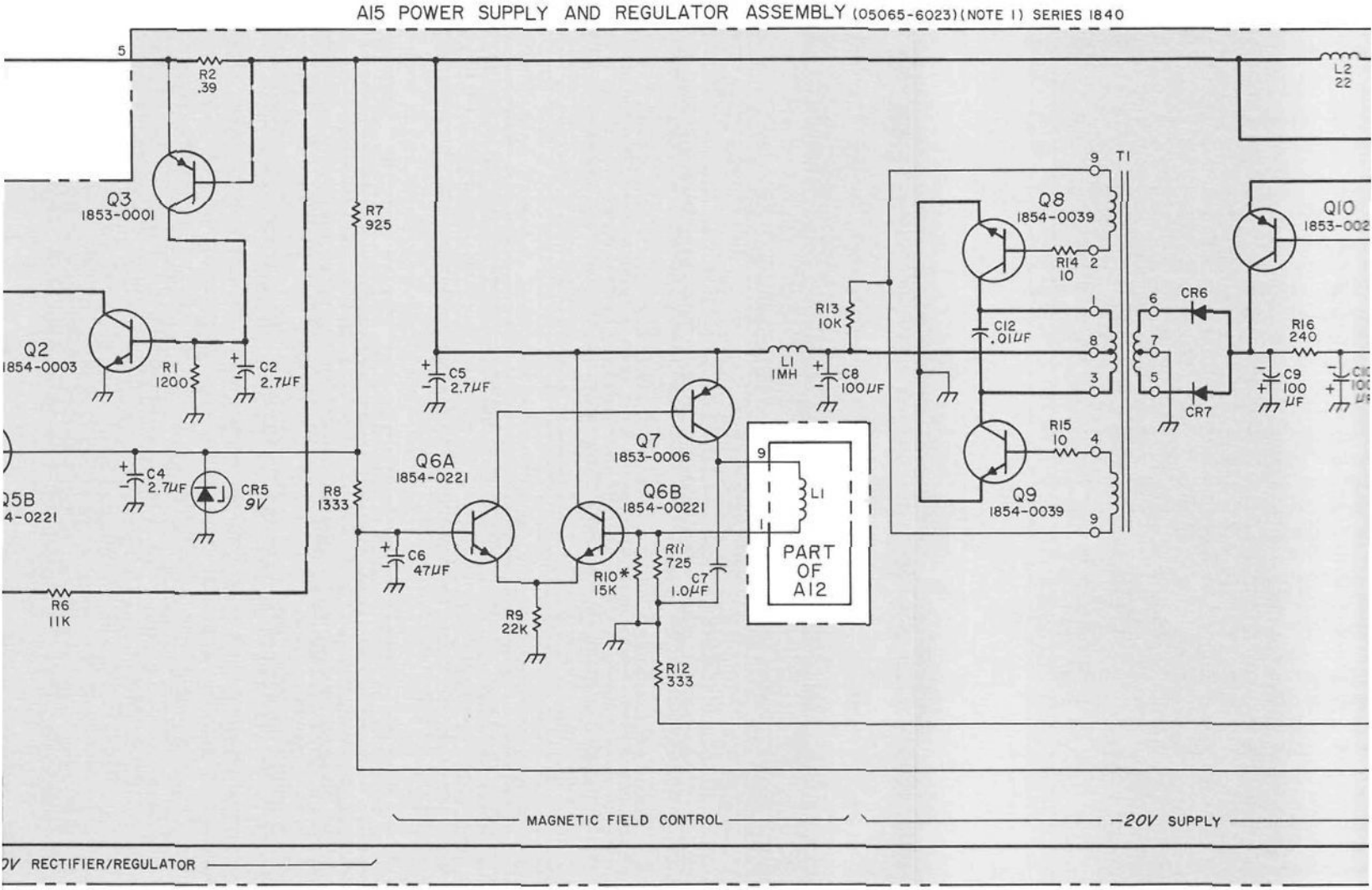

REFERENCE DESIGNATIONS

NO PREFIX	A12	A15
C1,2,7 CR3 J17 L1 P17 Q1 R4,6	L1 T.E.D.	C1-12 CR1-9 L1,2 Q1-10 R1-17 T1

T1 OUTLINE

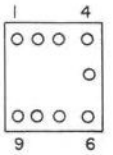

Figure

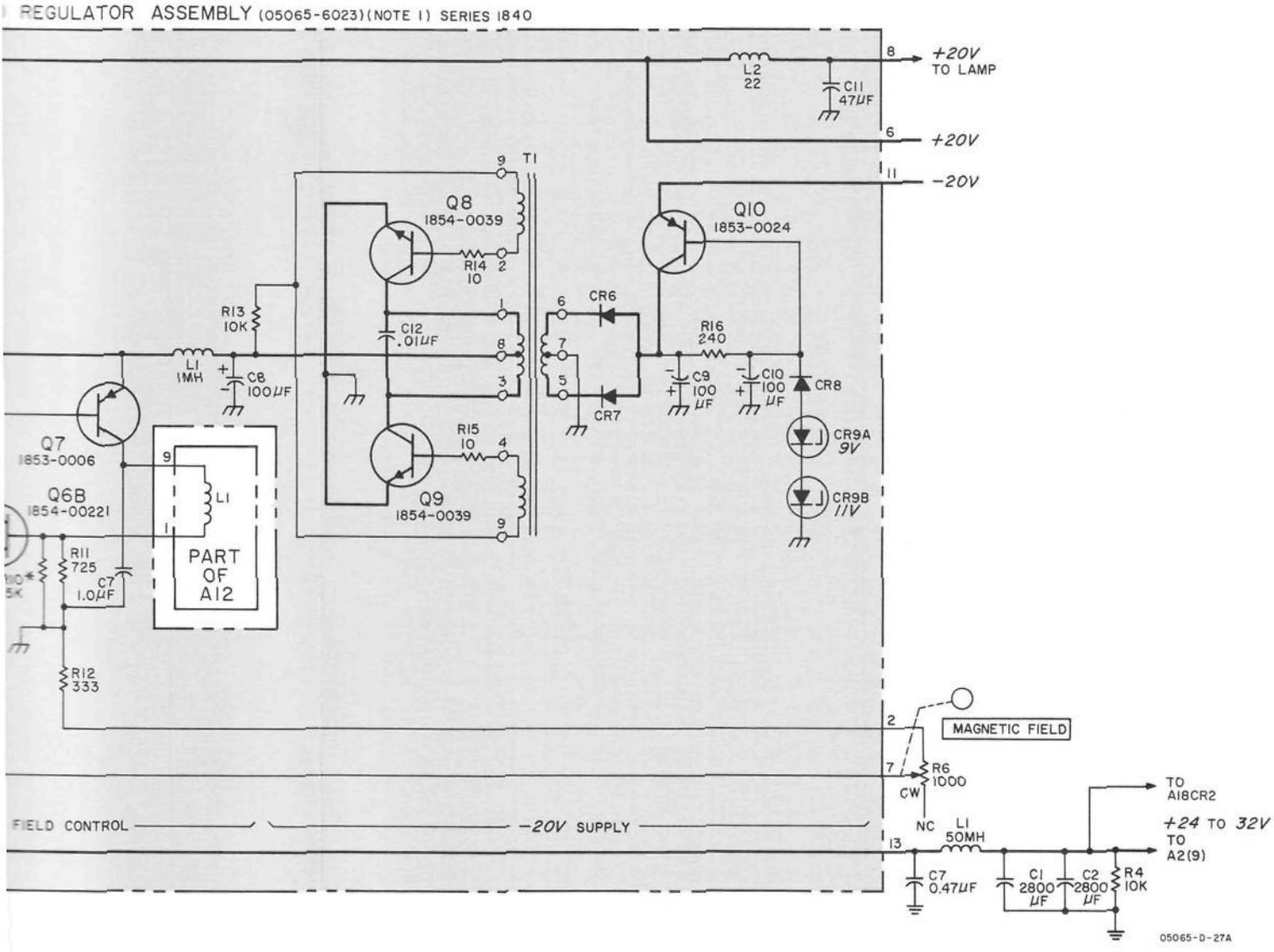

ERENCE DESIGNATIONS

	A12	A15
		C1-12 CR1-9
L1		L1,2
		Q1-10 R1-17 T1
T.E.D.		

TI OUTLINE

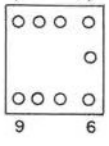

Figure 8-24. A15 Power Supply and Regulator Assembly

DIGITAL DIVIDER POWER SUPPLY A16 THEORY

The A16 module has three basic circuits:

a. Inverter and regulated power supply that supplies a +4.2 V output, and a +13.3 V zener-stabilized and filtered output for use in A16 circuits.

b. Blocking oscillator and output amplifier that supplies the 1 PPS tick pulse to the 1 PPS output jack.

c. The clock movement amplifier that supplies a push-pull square wave output to energize the clock.

The saturable-transformer, inverter oscillator of Q1, Q2, and T1 is powered by +20 V that is filtered by L1 and C1. R1, C2, and CR1 are a start circuit. R2, R3, C4, and C5 provide fast response, but limit average base current to improve inverter efficiency. Inverter frequency is about 1 kHz. Inverter output to the +4.2 V regulator is +6.5 V, full-wave rectified by CR2 and CR3, and filtered by C6.

In the regulator circuit, differential amplifier Q4 and Q6 compares a reference voltage developed by voltage divider R5 and R6 with the feedback dc voltage at the movable tap of +4.2 V control R13. Thus, the differential amplifier derives an error voltage. This error output at Q4 collector controls Q5 through Q3 to hold the regulated output at +4.2 V. Bypass elements R7 and C10 at Q5 base prevent oscillations. Further filtering for large load surges is provided by C17 and C18, with C17 providing high frequency filtering.

The second output of T1 energizes full-wave bridge rectifier CR4, 5, 6, and 7 to supply a positive dc output which is filtered by C7 and zener-stabilized at +13.3 V by CR8. Several elements of RC and LC filtering provided circuit decoupling.

Input 1 PPS pulses to the output tick blocking oscillator couple through J2 from A5 Digital Clock. Diode CR15 at Q7 base blocks any negative component of the input pulse. Q7 drives blocking oscillator transformer T2 and feedback to Q8 provides the regenerative action.

Diode CR9 protects Q7 and Q8 collector junctions. In T1 output, CR1 provides isolation. Selectable resistor R15 determines the output pulse width. Output tick pulses are provided by emitter followers Q9 and Q10. Zener diodes CR11 and CR12 limit output pulses to 10 volts peak. Q10 output is not used. Q9 output feeds the 1 PPS output jack.

1 PPS drive pulses connect from A5 Digital Divider through J1 to IC1 of the clock movement amplifier. IC1 provides flip-flop action and furnishes a push-pull output to clock amplifiers Q11 and Q12. The push-pull output of power amplifiers Q11 and A12 connects to the front panel clock and is limited to 10 V peak by zener diodes CR13 and CR14.

A16 MAINTENANCE

NORMAL OPERATION

The one-shot multivibrator output from A5A4, provides triggering for the Blocking Oscillator. This output is amplified and appears at J3 and a 1 PPS, 20 μs, +10 V pulse.

The power inverter provides +4.2 Vdc and +13.3 Vdc for A5 integrated circuits. Transistors Q1 and Q2 produce a 2 kHz pulse through T1 to the power supplies.

The output of A3Q15 is applied to clock movement flip-flop IC1. This flip-flop drives amplifier Q11 and Q12 which drives the clock movement.

OPERATIONAL CHECK

With unit power on, check with a dc voltmeter, for +4.2 V $\pm$ .1 V across C17. Check for a +10 V, 20 μsec pulse at A16J3.

TROUBLESHOOTING

Digital divider power supply common is isolated from instrument common. To observe waveforms and measure divider voltages, divider common may be connected to instrument common for troubleshooting with no adverse effects.

Figure 8-25
A16 DIGITAL DIVIDER POWER SUPPLY ASSEMBLY

(See Page 8-67)

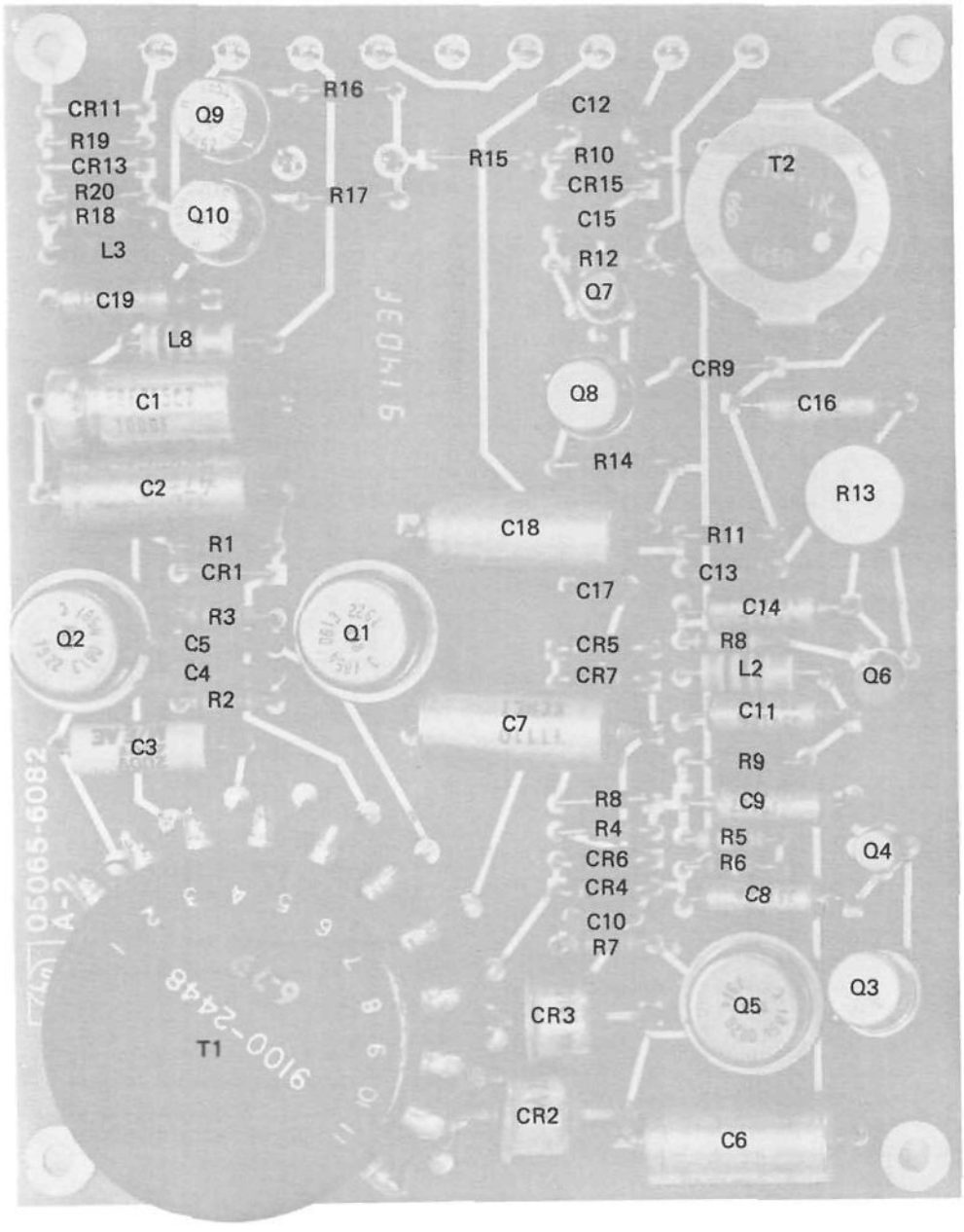
CR11
Q9
R16
C12
R19
CR13
R15
R10
T2
R20
R17
CR15
R18
Q10
C15
L3
R12
C19
Q7
L8
CR9
C1
Q8
C16
R14
C2
R13
C18
R11
R1
CR1
C13
C17
R3
C14
Q2
C5
Q1
CR5
R8
C4
CR7
L2
Q6
R2
C11
C7
C3
R9
R8
C9
R4
R5
Q4
CR6
R6
CR4
C8
C10
R7
Q3
CR3
Q5
T1
CR2
C6
05065-6082
A-2
9100-2448

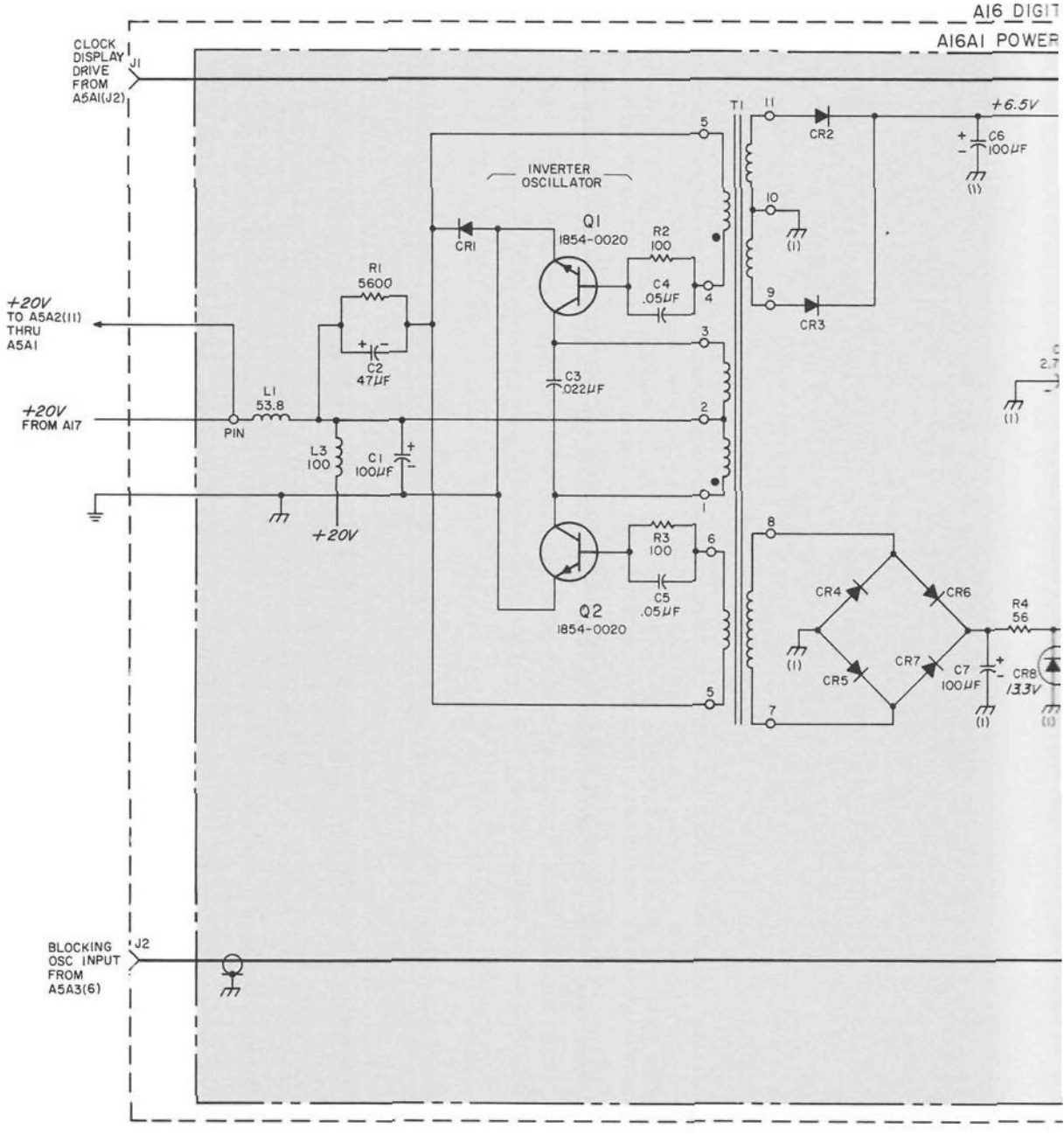

NOTES

1. REFERENCE DESIGNATIONS WITHIN THIS ASSEMBLY ARE ABBREVIATED. ADD ASSEMBLY NUMBER TO ABBREVIATION FOR COMPLETE DESCRIPTION.
2. UNLESS OTHERWISE INDICATED:
   RESISTANCE IN OHMS;
   CAPACITANCE IN PICOFARADS;
   INDUCTANCE IN MICROHENRIES
3. ASTERISK (*) INDICATES SELECTED COMPONENT, AVERAGE VALUES SHOWN

A16 DIGITAL DIVIDER POWER SUPPLY ASSEMBLY (05065-6085) (NOTE 1) SERIES 1912

A16A1 POWER SUPPLY AND IPPS OUTPUT BOARD ASSEMBLY (05065-6082) SERIES 1912

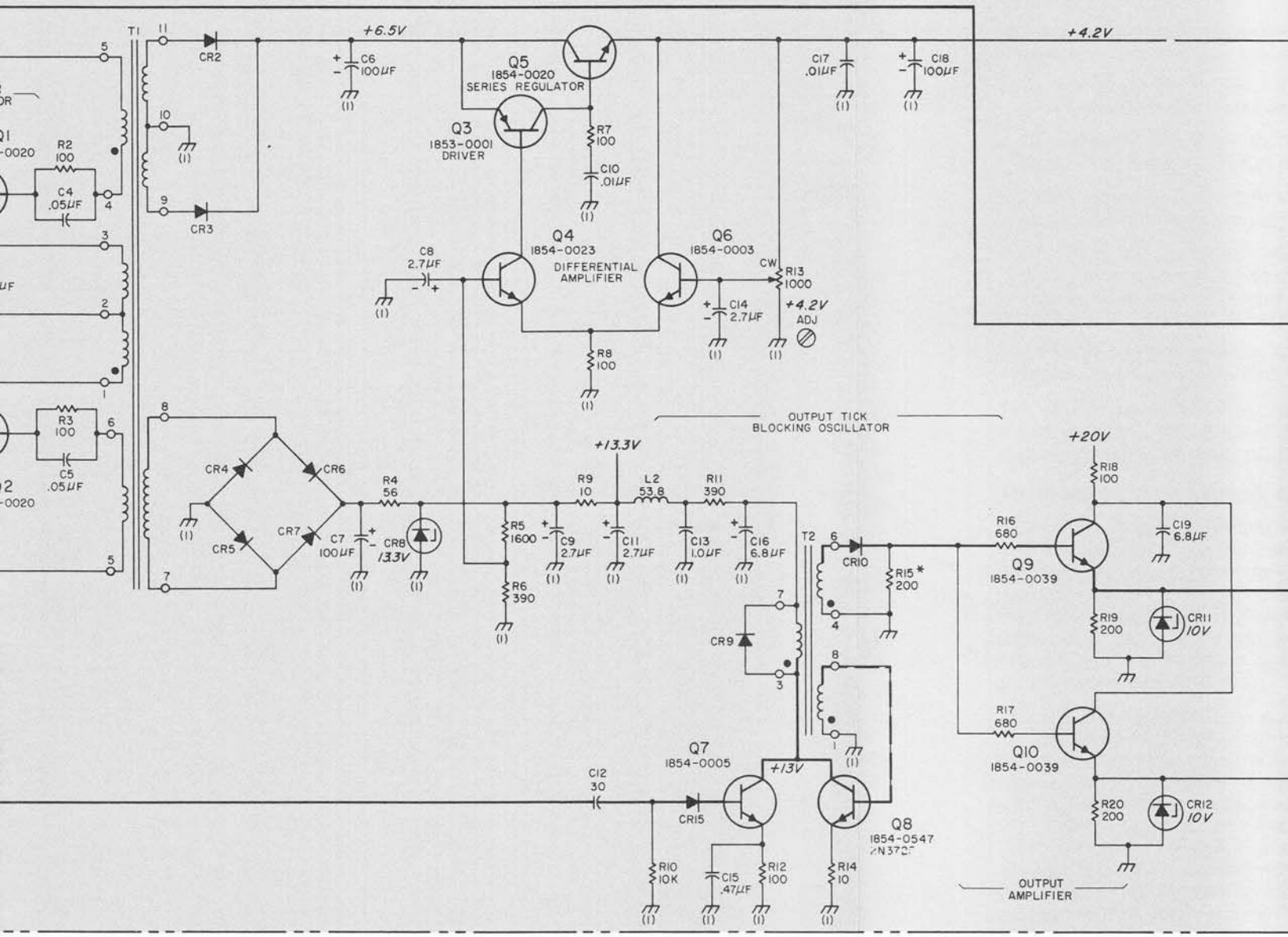

REFERENCE DESIGNATIONS

NO PREFIX	A16	A16A1
J14	J1-4	C1-19 CR1-15 IC1 L1-3 Q1-12 R1-26 T1,2

Figure 8

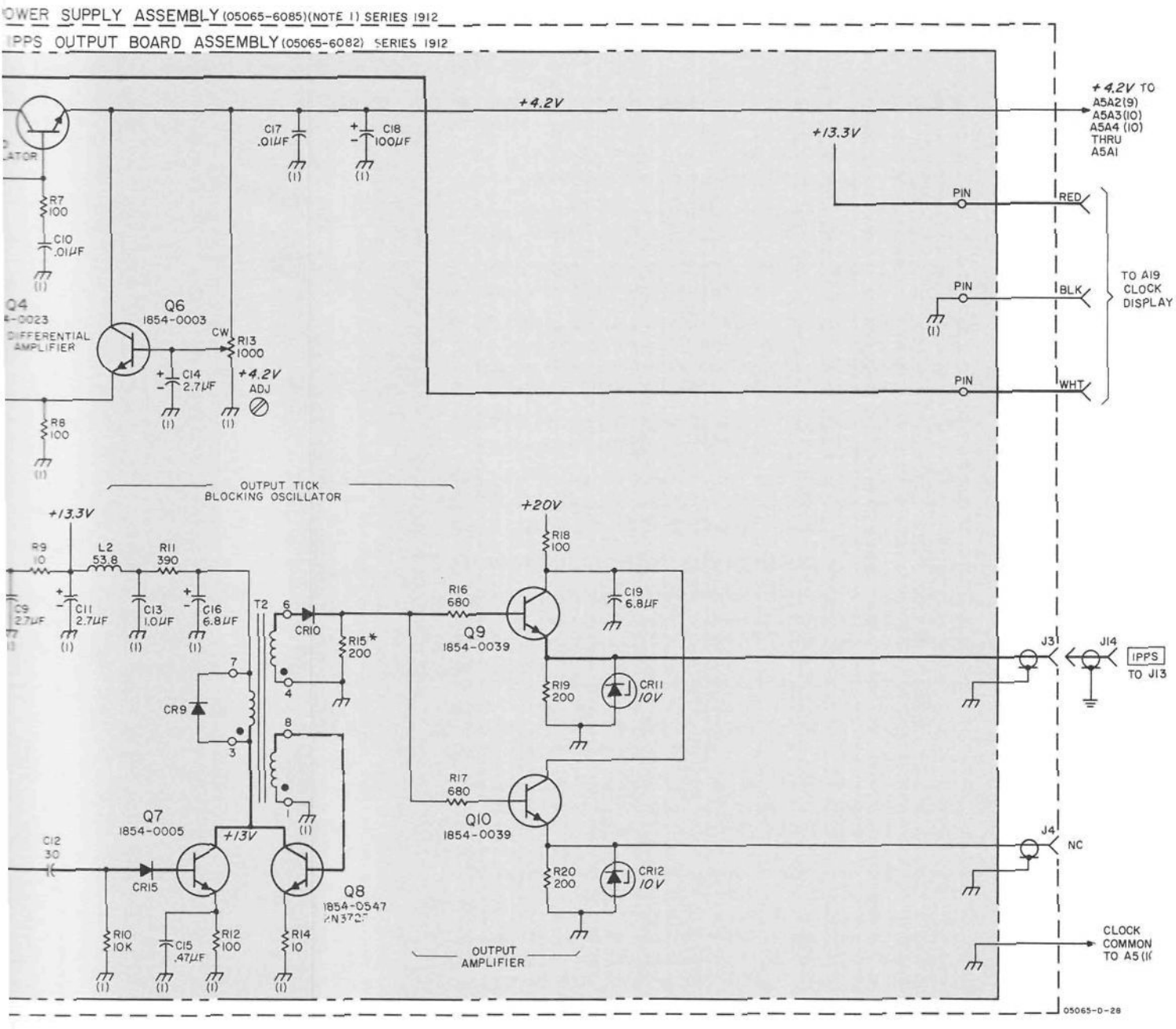

FERENCE DESIGNATIONS

	A16	A16A1
	J1-4	C1-19 CR1-15 IC1 L1-3 Q1-12 R1-26 T1,2

Figure 8-25. A16 Digital Divider Power Supply Assembly

CLOCK DISPLAY ASSEMBLY A19

The digital clock is a solid-state 24 hour clock with a seven segment LED (light emitting diode) display. It indicates time in hours, minutes, and seconds in synchronism with the 5065A generated 1 PPS signal. Time may be set and synchronized using the HOLD, SLOW/FAST, and SET switches.

The required inputs which enable the clock to operate are connected to the clock by five wires. These are:

1. Unregulated +28Vdc from the 5065A used to generate a regulated +5Vdc and used exclusively to drive the display.
2. Regulated +12Vdc from the A5 assembly used exclusively to operate the CMOS circuits in the display.
3. 1 PPS signal from the 5061A used to synchronize the clock and increment the display.
4. AC line sense signal from A2(9) turns off the display portion if instrument AC power fails or is removed. To display time, when AC power is not available, the clock front-panel STANDBY READ must be pressed.
5. 1 PPS and 12Vdc common. Circuit ground connects to the chassis through the LED digital clock circuits.

Two circuit boards make up the A19 Clock Display: the A19A1, Regulator/Driver (located at the rear of the A19 Assembly), and the A19A2, Display board.

A19A1 REGULATOR/DRIVER, GENERAL

The A19A1 Assembly contains two separate circuits. The regulator portion takes the unregulated 28Vdc from the 5065A and regulates it down to +5Vdc to provide power for the display light-emitting diodes. The driver portion takes the 1 PPS signal from the 5065A and shapes it for use by the clock accumulator/driver ship on A19A2. These two separate circuits are described in the following paragraphs under appropriate headings.

The regulator portion of the A19A1 Assembly consists of U2, Q3, Q4 and associated components. U2 is a switching regulator circuit that contains the switching oscillator, voltage reference, and switching transistor drive circuitry. The +5V regulator output voltage is sampled through R13 at U2(1). This voltage is compared to the reference input at U2(2). U1 adjusts the amount of time Q3 conducts based on whether the output voltage (+5V) is too high or too low. C9, L1, and C10 form a filter to keep switching transients out of the 5065A power supply. R9 and C7 set the switching frequency of the regulator. U2 provides a regulated +5Vdc at pin 16. This voltage provides the reference as well as providing power for Q2. L2 keeps current flowing to the load when Q3 is off. C14 and C15 filter the +5Vdc output. The circuitry of Q2 turns off the power supply to conserve power when the 5065A is operating from battery power. Under normal operation, when ac power is applied, zener diode CR1 conducts turning on Q2. This allows U2 to operate normally. When ac power is lost, Q2 turns off, forward biasing CR2 which in turn prevents the power supply from operating.

Pressing the STANDBY READ switch enables power supply operation, lighting the display. Current limiting and overvoltage protection is provided by Q4 and CR3, respectively.

The Clock Driver portion of the A19A1 Assembly operate in the following manner. A short (150 nsec) low level puls (≈1V) is applied to the input of Q1 from A16A1 (WHT This pulse is amplified (by Q1) and shaped by 555 timer U The output of U1 goes to A17A2 where it drives the cloc accumulator/display IC. In normal operation U1 behaves like a one-shot multivibrator outputting one pulse for each input pulse. When the SET pushbutton is activated, U1 free runs, and generates a signal whose frequency is set by th position of the SLOW/FAST switch. In SLOW, the frequency is approximately 60 Hz, 600 Hz in FAST. These two frequencies allow the hours, minutes, and seconds on th display to be easily set.

A19A2, CLOCK DISPLAY BOARD

The clock display board consists of a MOS cloc chip, a transistor array, a buffer amplifier array, four drive transistors, and six LED displays. This assembly's function is to accumulate and display time-of-day in synchronism with the instrument's 1 PPS signal. Operation is as follow The MOS circuit U1 normally operates from 50 or 60 Hz. It is enabled to operate by the 1 PPS signal from A19A1 by grounding the "slow set" line at U1 (17). U1 divides the PPS input to form the hours, minutes, and seconds coun In addition, it formats the output so that this count may be displayed on a seven-segment strobed LED display.

The time display signals from U1 are composed of tw parts:

1. The digit enable signal
2. The multiplexed seven-segment signal

The digits enable signals from U1 are:

Pin 23: tens-of-hours.
Pin 24: units-of-hours.
Pin 25: tens-of-minutes.
Pin 26: units-of-minutes.
Pin 21: tens-of-seconds.
Pin 22: units-of-seconds.

These signals enable the LED displays through U3 gate and allow the multiplexed seven segment outputs to turn the correct display segment.

The "segment enabling signals" are buffered through I stages and applied to the LED displays. Thus, the segmer of an individual number display are enabled by outputs from U1 (6 to 12) while the display itself is turned on by one of the U1 (21 to 26) outputs.

The multiplexed seven-segment signals from U1 are shown below.

Legend:

Pin 6: for segment a.
Pin 7: for segment b.
Pin 8: for segment c.
Pin 9: for segment d.
Pin 10: for segment 3.
Pin 11: for segment f.
Pin 12: for segment g.

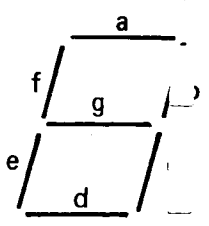

Repairs

Before attempting repairs, perform the following procedures:

NOTE

Some of the circuits on the CLOCK DISPLAY assemblies are CMOS. Use high impedance test equipment when checking signals. Precautions should be taken when removing or replacing these circuits to prevent damage from static charges.

a. Momentarily set front panel DIVIDER MODE switch to START.

b. Check CIRCUIT CHECK meter in 1 MHz position for reading of approximately 40. If reading not present, troubleshoot A6 assembly.

c. Check front panel 1 PPS output. If not present, troubleshoot A5 assembly.

d. If the display is not lit, press STANDBY DISPLAY switch. If display lights and operates normally, the instrument is not operating from AC power. This condition is normal. If the display does not light when the STANDBY DISPLAY switch is pressed, perform troubleshooting procedures described below.

e. Read A19A2 Clock Display Theory of Operation.

A19 Assembly Removal

Prior to removing or reinstalling the Clock Display, turn off all operating power. Wire and cable length to the clock panel or clock rear board is sufficient to permit removal of the clock without disconnecting these wires or the cable. Place the clock on a pad or cloth to minimize scratch damage or shorting of circuit traces. Then, proceed as follows:

a. Turn off all operating power.

b. Remove the instrument top cover. In Option 003 disable the internal standby battery.

c. Use a 5/16" spin-type wrench and remove three 5/16" nuts which secure the clock to the instrument front panel. Retain the nuts for reinstallation.

d. Press at the bottom-rear then at the top-rear of the clock until it is loose.

e. Carefully remove the clock. Gently pull the connected wires and cable forward and set the clock on the work surface.

f. With clock assembly removed, connect a jumper, or clip lead between the clock chassis and the instrument chassis.

g. Before applying operating power ensure that the exposed LED Clock boards and wires are not in contact with any metal objects or surfaces. Apply operating power.

h. To reinstall the Clock Display, turn off all operating power. In Option 003, disable the internal standby battery.

i. Perform steps b to e in reverse order. (See Note.)

NOTE

While installing the clock into the instrument front panel, check that wires are not pinched by screws or metal work. Position the wires for a neat appearance after installation.

j. When clock is reinstalled, apply power and set time as described in paragraph 3-28 of the 5065A Operating and Service Manual.

Troubleshooting

General

Procedures in this section describe fault isolation to the circuit board level, disassembly of the clock, and troubleshooting information for each of the three circuits.

Clock System Troubleshooting

To perform the following tests, remove the clock from the instrument and connect as described in A16 ASSEMBLY REMOVAL.

A19A1 Power Supply Check

NOTE

All voltages measured with respect to instrument chassis.

a. Measure voltages indicated below. Be sure to clock chassis is grounded to instrument chassis.

VOLTAGE	LOCATION
+26 ±4Vdc	A19A1P1(3)
+12 ±2Vdc	A19A1(R)
+5 ±.5Vdc	A19A1P1(4)

b. If the +26 or +12 volt supplies are out of tolerance, troubleshoot the source of these voltages. If the +5V supply is out of tolerance. remove the A19A2 Assembly and measure the voltage again. If voltage now is correct, go to step b(2).

(1) If voltage remains out of tolerance, troubleshoot A19A1, 5V regulator assembly.

(2) If voltage is now correct it indicates a short or low impedance on 5V line or defective current-limit circuit; troubleshoot 5V line and circuits on A19A2 which use 5V. If these are OK, check current-limit circuit of A19A1.

NOTE

An external 5V can be used in place of A19A1 output.

c. Check for +1V, 150 nsec, 1 PPS signal at A19A1(W). Be sure Clock Display chassis is grounded to instrument chassis. If pulse not present, troubleshoot A5 Digital Divider Assembly.

d. Check for 12V, .3 ms, 1 PPS signal at A19A1P1(5). If incorrect or not present, check circuit of A19A1U1.

A19A2 Clock Display Check

a. If display is not lit go directly to "Display Not Lit" step b. If display is lit but not functioning correctly, proceed as follows:

1. Check for 1 PPS signal at A19A2U1(19). It should be as shown on schematic. If not, troubleshoot Driver Circuit of A19A1U2.

2. Check operation of digit and segment drivers U2, U3 and Q1 thru 6. If these check OK, replace U1. See Note 4 on Figure 8-26 for typical waveform.

b. Display Not Lit

1. Check voltage at A19A2(4). It should be 5V ±.5Vdc. If incorrect, troubleshoot circuit of A19A2U1.

2. Check +12V input at A19A2(5). It should be the same as measured at "R" terminal on A19A1. If not, check continuity of +12V line from A19A1 to A19A2.

3. Substitute a new LED in one of the display positions.

4. Trouble is in A19A2U1 or 2. Check for switching waveforms at U1 (6-12) and (21-26). Check for switching waveforms at U2 and U3 outputs. See Figure 8-26 for typical waveforms.

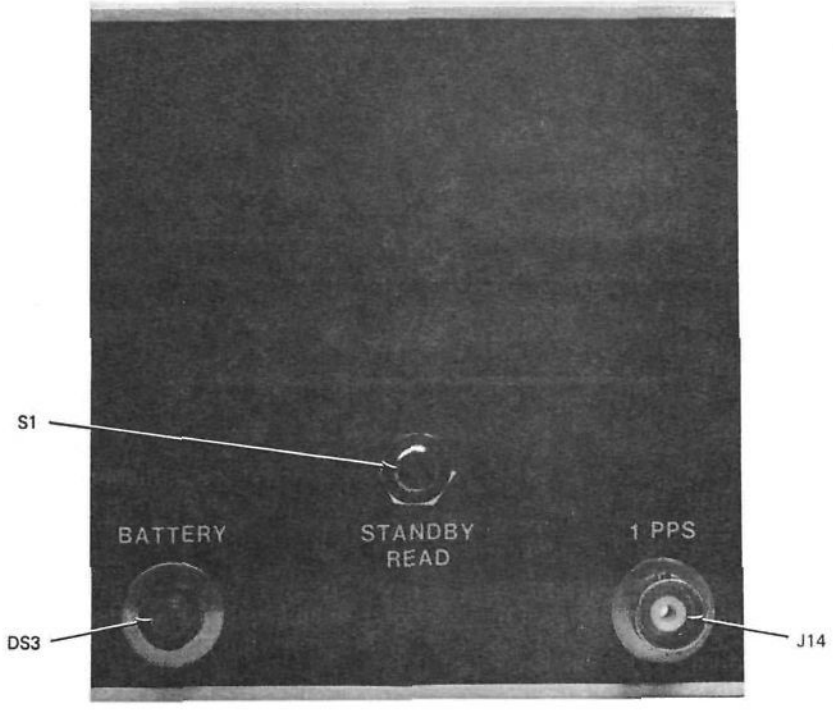

A19 FRONT PANEL

Figure 8-26
A19 CLOCK DISPLAY ASSEMBLY

(See Page 8-71)

A19 CLOCK DISPLAY
SIDE VIEW

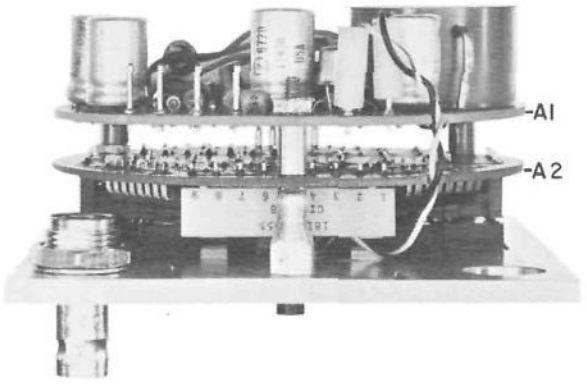

A19A1
REGULATOR
DRIVER

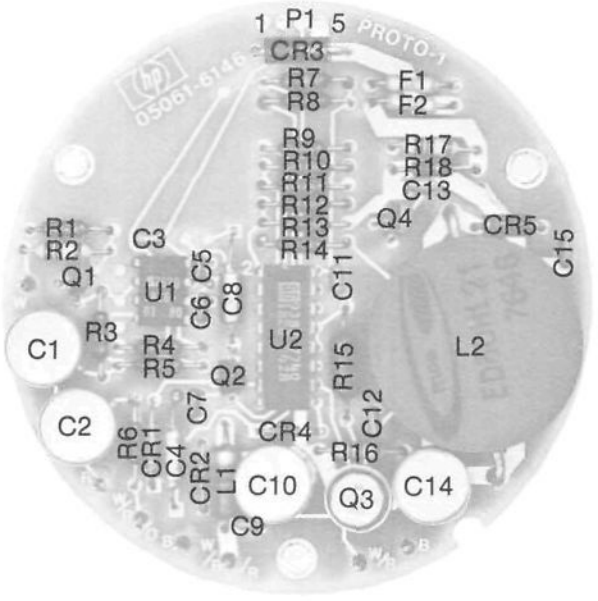

A19A2
CLOCK DISPLAY



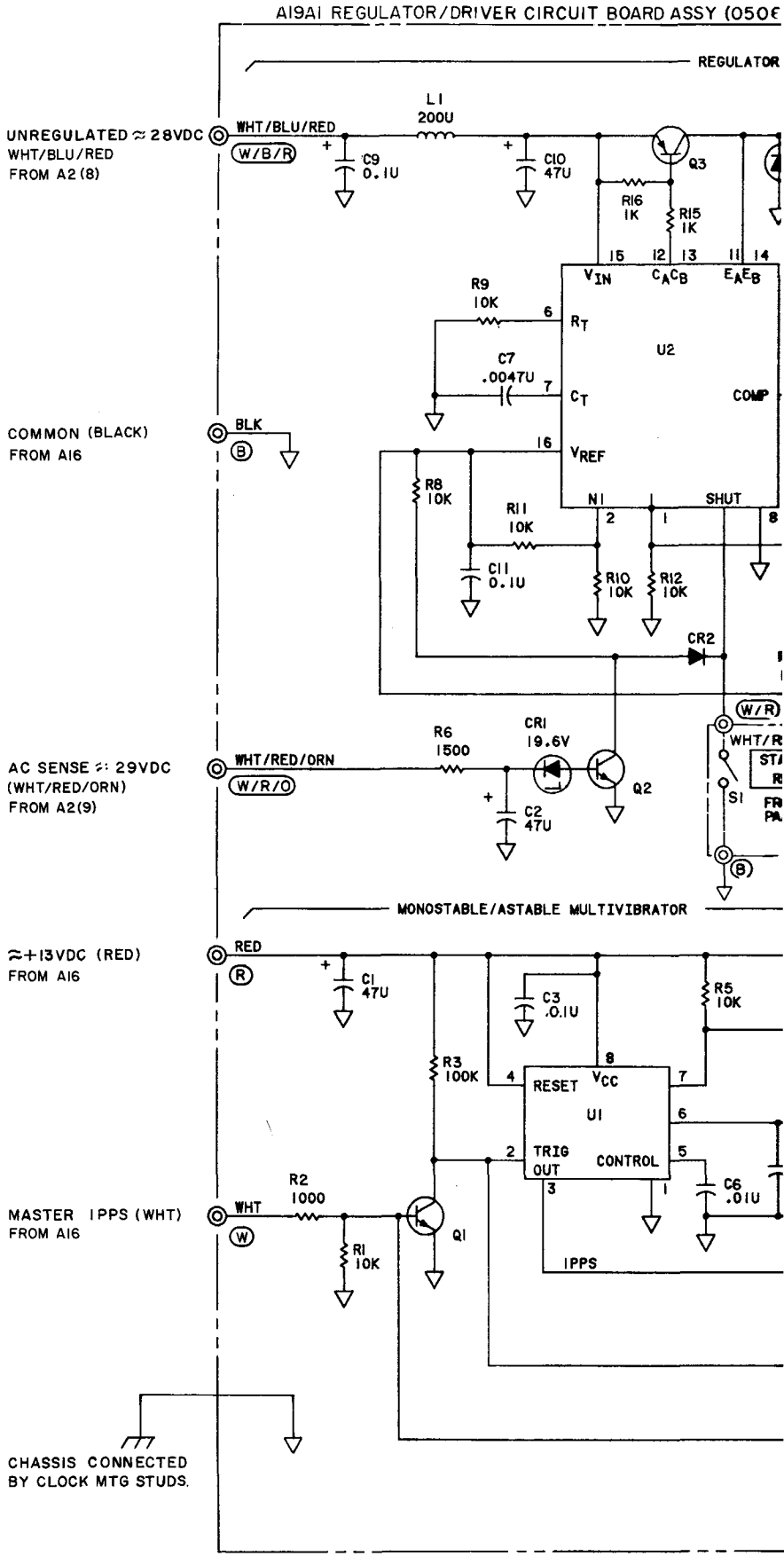
A19A1 REGULATOR/DRIVER CIRCUIT BOARD ASSY (050€
REGULATOR
UNREGULATED ≈ 28VDC
WHT/BLU/RED
FROM A2(8)
WHT/BLU/RED
W/B/R
L1
200U
C9
0.1U
C10
47U
Q3
R16
1K
R15
1K
15
12
13
11
14
VIN
CACB
EAEB
R9
10K
6
RT
U2
C7
.0047U
7
CT
COMP
COMMON (BLACK)
FROM A16
BLK
B
16
VREF
R8
10K
R11
10K
N1
2
1
SHUT
8
C11
0.1U
R10
10K
R12
10K
CR2
W/R
AC SENSE ≈ 29VDC
(WHT/RED/ORN)
FROM A2(9)
WHT/RED/ORN
W/R/O
R6
1500
CR1
19.6V
Q2
C2
47U
S1
MONOSTABLE/ASTABLE MULTIVIBRATOR
≈+13VDC (RED)
FROM A16
RED
R
C1
47U
C3
.01U
R5
10K
R3
100K
8
4
RESET
VCC
7
U1
6
2
TRIG
OUT
CONTROL
5
3
1
C6
.01U
R2
1000
MASTER 1PPS (WHT)
FROM A16
WHT
W
R1
10K
Q1
1PPS
CHASSIS CONNECTED
BY CLOCK MTG STUDS.

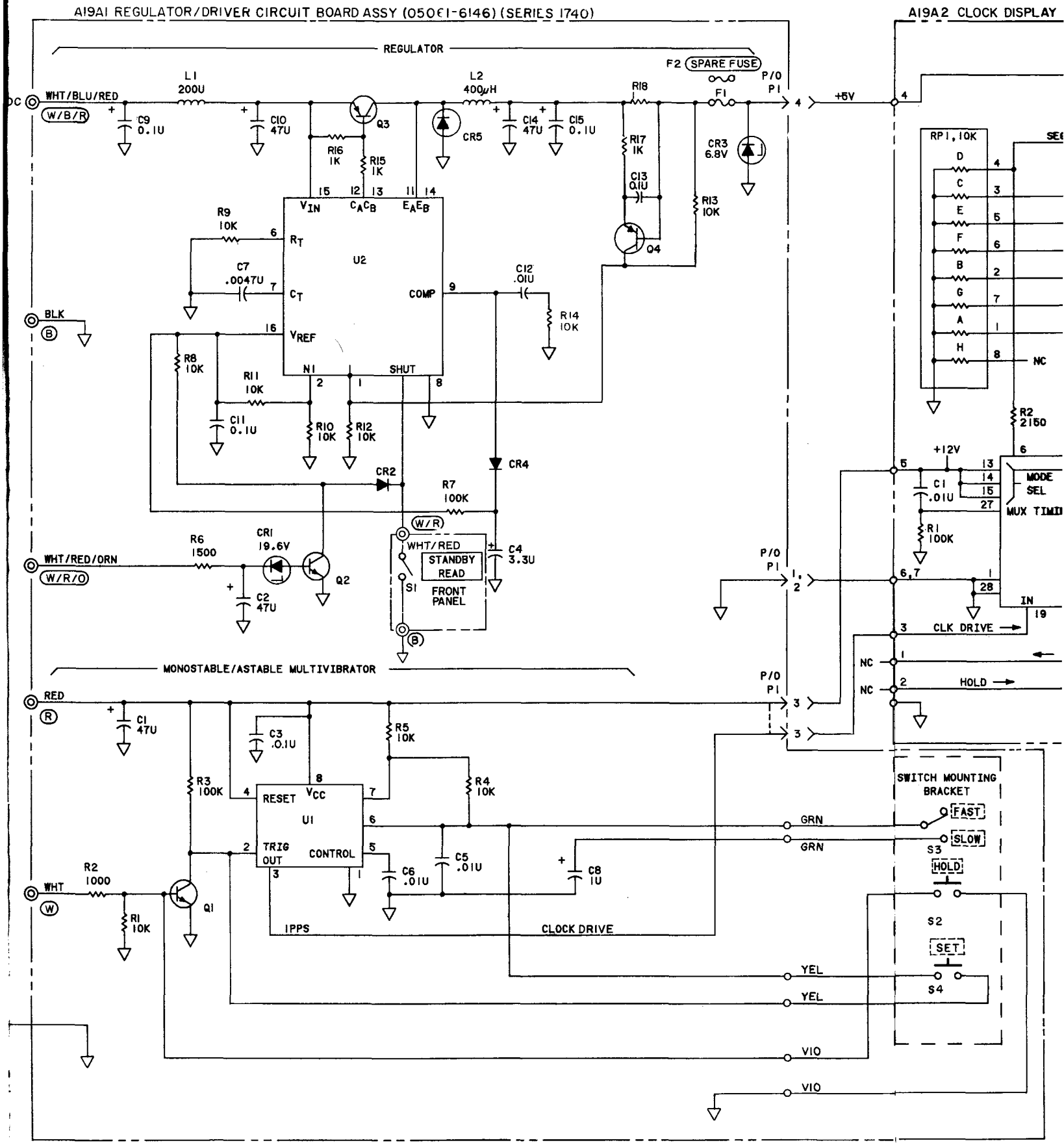
A19A1 REGULATOR/DRIVER CIRCUIT BOARD ASSY (050E1-6146) (SERIES 1740)
A19A2 CLOCK DISPLAY
REGULATOR
WHT/BLU/RED
W/B/R
L1
200U
C9
0.1U
C10
47U
Q3
R16
1K
R15
1K
L2
400μH
CR5
C14
47U
C15
0.1U
F2 SPARE FUSE
F1
P/O P1
+5V
R18
R17
1K
C13
0.1U
R13
10K
CR3
6.8V
Q4
RP1, 10K
D
C
E
F
B
G
A
H
NC
R2
2150
+12V
C1
.01U
MODE SEL
MUX TIMI
R1
100K
IN
19
CLK DRIVE
HOLD
U2
V_{IN}
C_AC_B
E_AE_B
R_T
C_T
COMP
V_{REF}
N1
SHUT
R9
10K
C7
.0047U
C12
.01U
R14
10K
R8
10K
R11
10K
C11
0.1U
R10
10K
R12
10K
CR4
CR2
R7
100K
W/R
WHT/RED
STANDBY READ
FRONT PANEL
S1
C4
3.3U
BLK
B
WHT/RED/ORN
W/R/O
R6
1500
CR1
19.6V
Q2
C2
47U
P/O P1
MONOSTABLE/ASTABLE MULTIVIBRATOR
RED
R
C1
47U
C3
.01U
R5
10K
R3
100K
R4
10K
U1
RESET
V_{CC}
TRIG
OUT
CONTROL
C6
.01U
C5
.01U
C8
1U
1PPS
CLOCK DRIVE
WHT
W
R2
1000
R1
10K
Q1
NC
HOLD
SWITCH MOUNTING BRACKET
FAST
SLOW
S3
HOLD
S2
SET
S4
GRN
GRN
YEL
YEL
VIO
VIO

A19A2 CLOCK DISPLAY ASSEMBLY (05061-60125 FOR OPTION 001), (05061-60136 FOR OPTION 003)

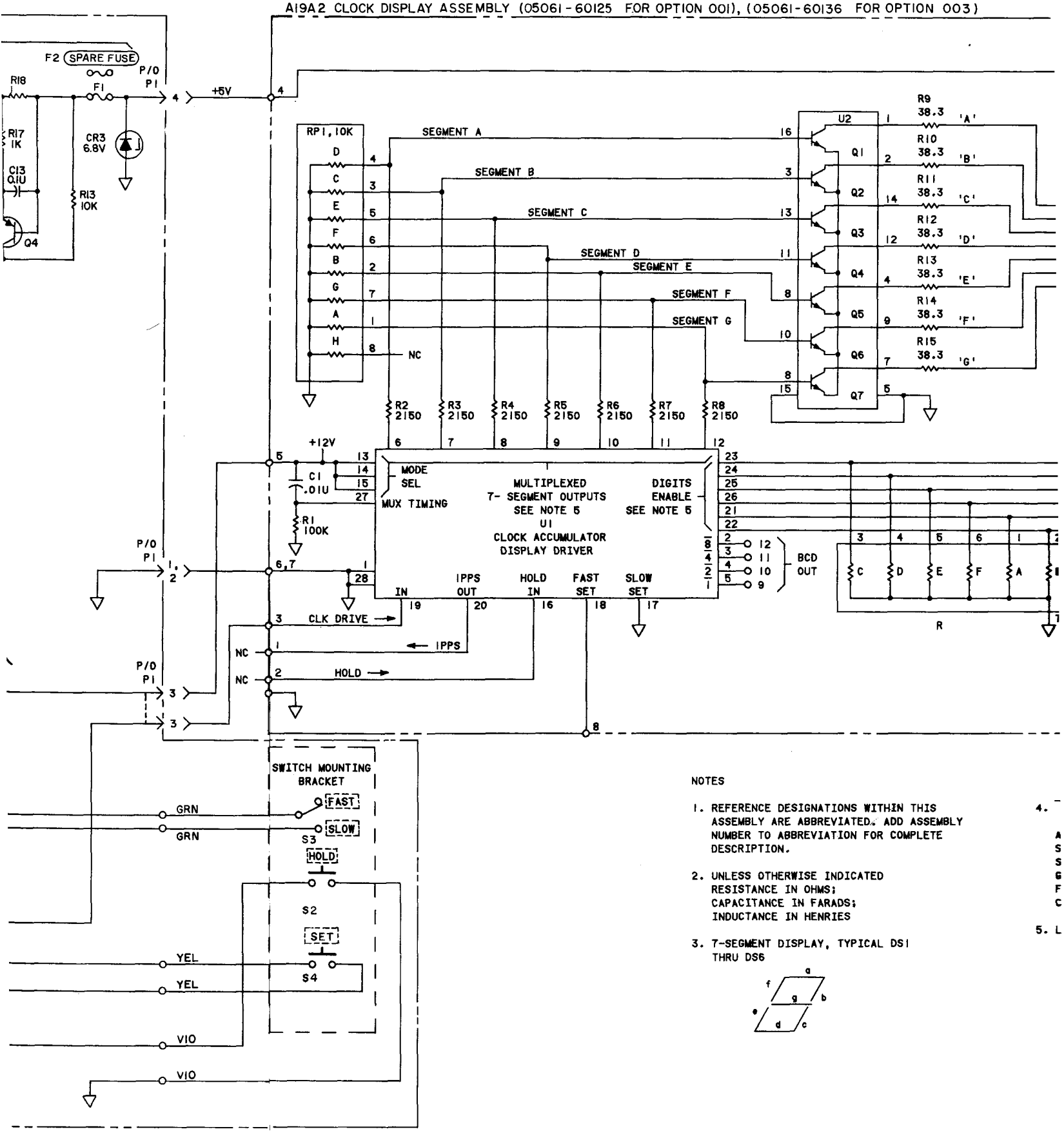

NOTES

1. REFERENCE DESIGNATIONS WITHIN THIS ASSEMBLY ARE ABBREVIATED. ADD ASSEMBLY NUMBER TO ABBREVIATION FOR COMPLETE DESCRIPTION.

2. UNLESS OTHERWISE INDICATED
   RESISTANCE IN OHMS;
   CAPACITANCE IN FARADS;
   INDUCTANCE IN HENRIES

3. 7-SEGMENT DISPLAY, TYPICAL DS1 THRU DS6

4.

A
S
S
G
F
C

5. L

FOR OPTION 001), (05061-60136 FOR OPTION 003)

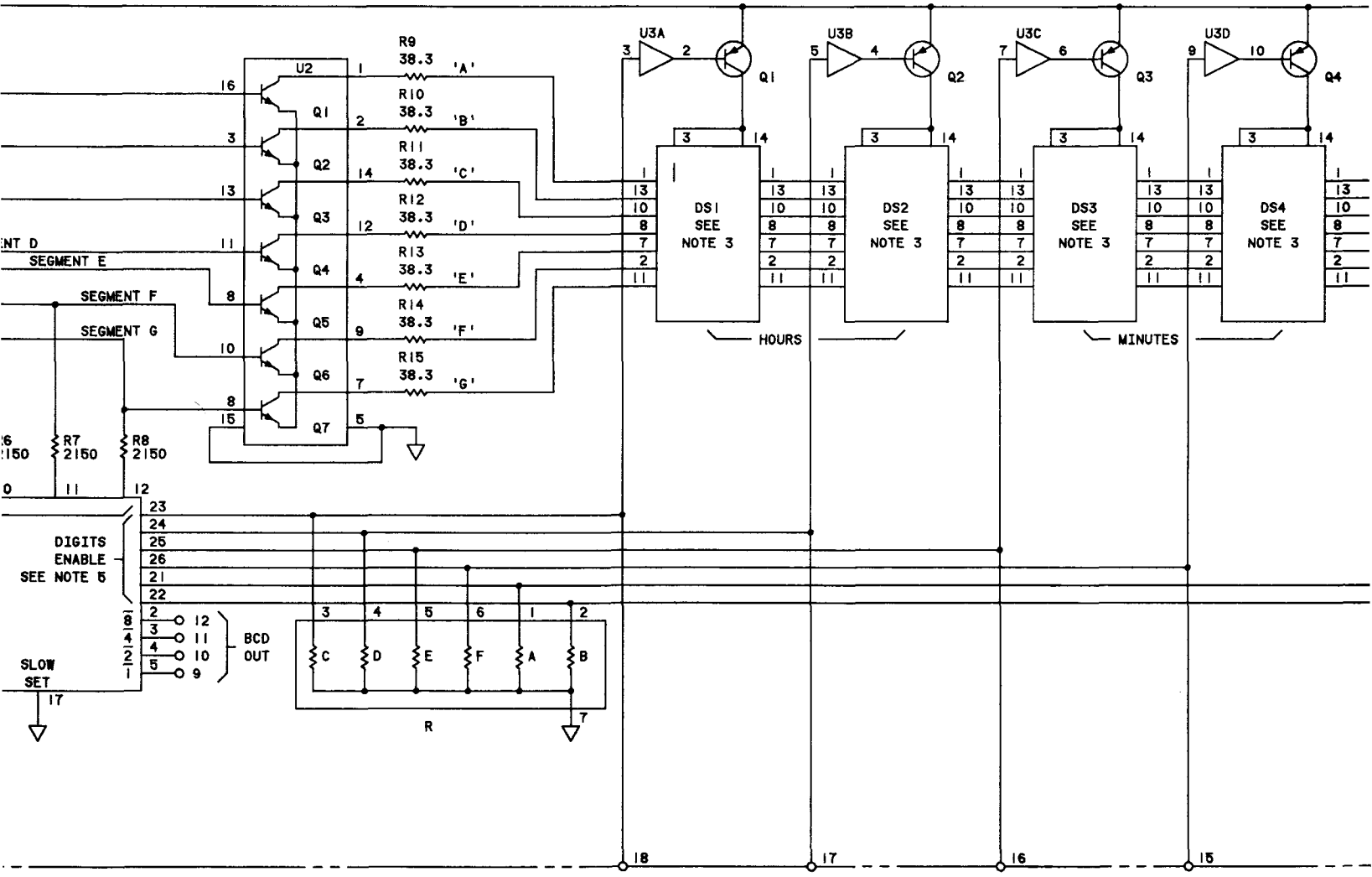

NOTES

1. REFERENCE DESIGNATIONS WITHIN THIS ASSEMBLY ARE ABBREVIATED. ADD ASSEMBLY NUMBER TO ABBREVIATION FOR COMPLETE DESCRIPTION.

2. UNLESS OTHERWISE INDICATED RESISTANCE IN OHMS; CAPACITANCE IN FARADS; INDUCTANCE IN HENRIES

3. 7-SEGMENT DISPLAY, TYPICAL DS1 THRU DS6

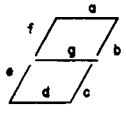

4. 

APPROXIMATION OF DISPLAY AND SEGMENT SWITCHING WAVE FORM IN SOME CASES THE SAME SEGMENT IS OFF IN ALL DISPLAY GIVING A STRAIGHT LINE WAVE FORM. WAVE-FORMS WILL CHANGE EACH SECOND WITH CLOCK RUNNING.

5. LEGEND: ◎ POST TERMINALS
O WIRE SOLDERED IN BOARD

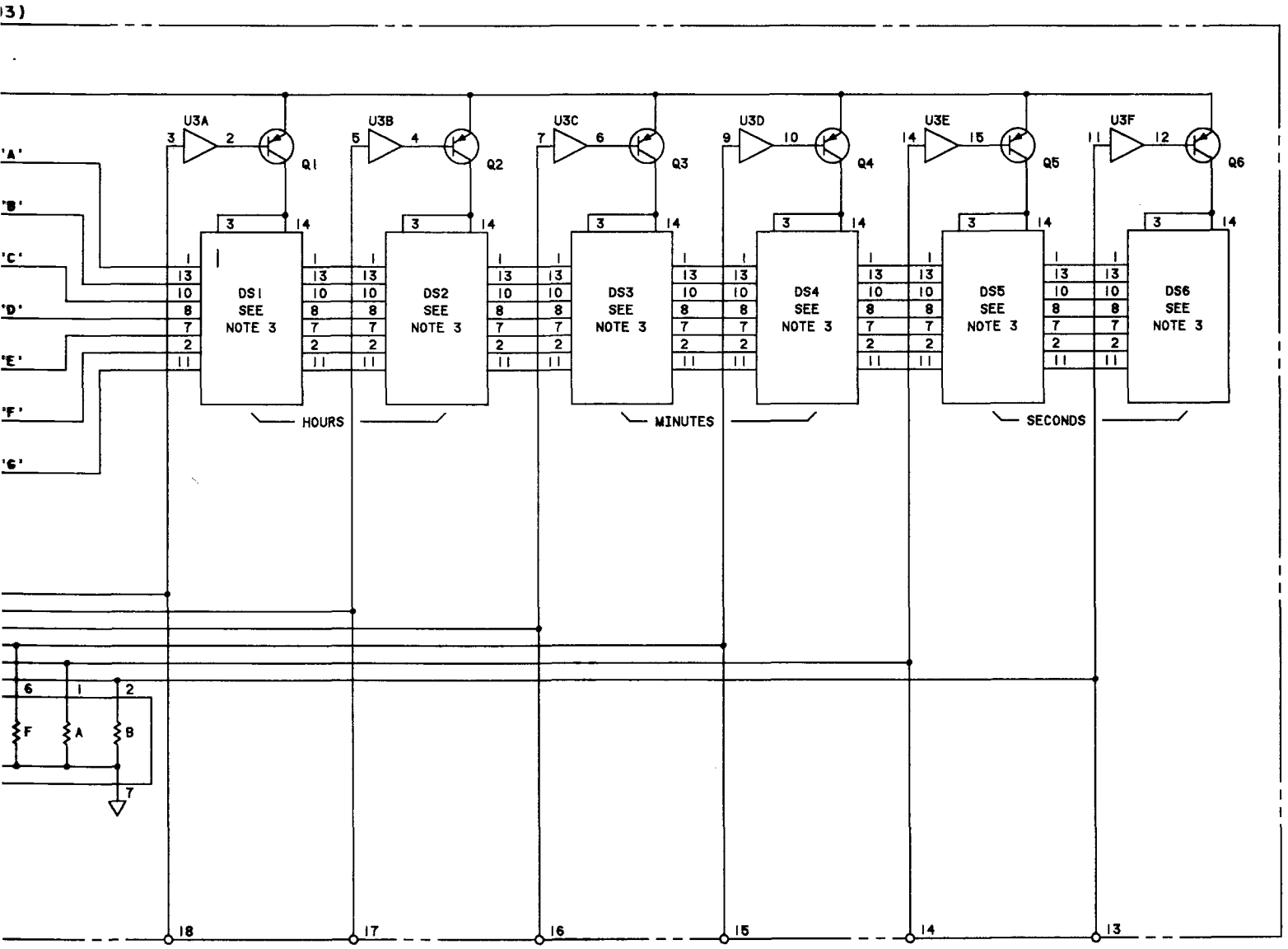

4. 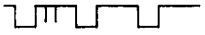

APPROXIMATION OF DISPLAY AND SEGMENT SWITCHING WAVE FORM IN SOME CASES THE SAME SEGMENT IS OFF IN ALL DISPLAY GIVING A STRAIGHT LINE WAVE FORM. WAVE-FORMS WILL CHANGE EACH SECOND WITH CLOCK RUNNING.

5. LEGEND: ◎ POST TERMINALS
O WIRE SOLDERED IN BOARD

Figure 8-26. A19 Clock Display Assembly



MANUAL PART NO. 05065-9041

PRINTED IN U.S.A.

DIGITAL DIVIDER A5 THEORY

GENERAL DESCRIPTION

The A5 Digital Divider provides a one pulse-per-second signal for a front and rear panel output signal, and drives the A19 Clock Display Assembly. The 1 PPS output can by synchronized to an external 1 PPS signal with selectable time delay difference with respect to an external synchronizing 1 PPS.

A5 has four subassemblies:

1. A5A1 Multiplier and Amplifier
2. A5A2 Voltage Regulator
3. A5A3 10 MHz-to-1 PPS Divider And Delay
4. A5A4 Interconnect

The four subassemblies are described in the following paragraphs.

A5A1 Multiplier-Amplifier

The A5A1 Multiplier and Amplifier has three separate parts: 1) a 1 MHz-to-10 MHz multiplier, 2) an amplifier, and 3) a drive for the A19 Clock Display.

The multiplier section provides a 10 MHz output signal generated from the 1 MHz input signal supplied by A6. The 1 MHz signal, which comes in on the J4 RF connector, is coupled through C1 to the base of Q1. Q1, which is part of the differential amplifier Q1-Q2, acts as a switch. The input signal is switched through L2 to generate 1 MHz harmonics. CR1 prevents ringing in the signal that could damage Q2 and Q3. The output of Q2 is connected to Q3, which is a tuned amplifier at the resonant frequency of L1 and C4. The output of Q3 is applied to another amplifier (Q4-Q5) tuned to 10 MHz by L3. At this point, a good 10 MHz sine wave has been generated. The output of Q5 is coupled through C10 to the input of the sine wave-to-TTL converter, Q6-Q7. When the signal is above the dc bias of Q6, Q6 switches off, switching Q7 on. This generates a TTL-high pulse at $\overline{\text{A5A1(12)}}$ that follows the 10 MHz sine wave from Q5. Diode CR2 produces the dc bias voltage for Q1, Q2, Q4, Q5, Q6, and Q7.

The amplifier section of A5A1 has an amplifier that converts the 1 PPS signal from A5A3 to TTL for the front-panel 1 PPS output connectors. Transistors Q8, Q9, and Q11 comprise this amplifier.

The third section of A5A1 has a single transistor amplifier, Q14, that drives the A19 Clock Display with the 1 PPS signal from A5A3. U1 is a regulator that transforms an input of +18 Volts to +12 Volt power for the A16 Clock Display Assembly.

The A5A1 assembly is a connection point for signals from the HP 5065A making them available for external use. Connector J4 has the 1 MHz input sine wave, at about 1 Volt rms, that is applied to a 10 MHz multiplier. The 10 MHz signal at $\overline{\text{A5A1(12)}}$ is connected through A5A4 to $\overline{\text{A5A3(12)}}$. The SYNC signal from J12 on the 5065A rear panel is connected through A5A1 to A5A4 and then to A5A3(1). The 1 PPS signal from A5A3 is synchronized with the SYNC signal from the 5065A rear panel. The other RF connector, J1, is a 1 PPS output. The 1 PPS from A5A1J1 is connected to J13 on the 5065A front panel. There are four terminals on A5A1. Terminal 4 is the +18 Volt input terminal and has a red wire connected to it. Terminals 1, 2, and 3 are outputs to the A19 Clock Display. Pin 1 is common (ground). Pin 2 is the +12 Volt power. Pin 3 is the 1 PPS signal that drives the front-panel clock display.

A5A2 5-Volt Regulator

The A5A2 assembly receives the +18 Volt power from A5A1 and regulates it to +5 Volts for A5A1 and A5A3. There are three basic circuits in A5A2:

1. voltage reference
2. switching regulator
3. short-circuit current protection

U3 is a voltage reference that supplies +2.5-Volt reference to the non-inverting input [U2(2)] of the switching regulator. Feedback from the regulator output to U2(1) through voltage divider R12-R13, drives U2(1) to the same voltage as U2(2); +2.5 Volts. So the output must be +5 Volts because R12 and R13 are almost equal.

The U2 regulator oscillates at about 25 kHz. This signal, which is set by R7 and C4, switches Q2-Q1 on and off. When Q1 is on, current is forced through L1 because CR1 is reverse-biased. When Q1 switches off, the polarity of L1 reverses to keep current from flowing from ground, through CR1 and L1, and to the load. The output voltage is regulated by U2 adjusting the time that Q1 is switched on for every cycle. In normal operation, the duty cycle is about 35 percent. A soft start is provided by C6, R11 and CR3. C5 and R10 provide compensation for the internal U2 operational amplifiers.

Short-circuit protection is provided by U1. During normal operation, the voltage at U1(2) is greater than the voltage at U1(3) (about +5.08 Volts and +4.95 Volts). Therefore the output of U1 is low. When the load current through R1 is greater than 950 milliamperes, the voltage at U1(2) is less than the voltage at U1(3). The output of U1 goes up to about +3 Volts and switches U2 off through R14. U1 will keep U2 switched off while the short-circuit condition continues.

A5A3 10 MHz-to-1 PPS Divider and Delay

The A5A3 board generates a one pulse-per-second signal that provides the front-panel 1 PPS output. The 1 PPS is synchronized to an external signal from the rear-panel

SYNC INPUT connector. The 10 MHz from A5A1 is applied to all of the decade counters, U8 through U14. ENABLE P and ENABLE T (Pins 7 and 10) of U11 are always enabled (always held high). Therefore, every time the clock pulse occurs, that counter changes state. The least significant bit in this counter chain is pin 14 of U11. If this point is monitored with an oscilloscope, a 5 MHz signal is displayed. U11 pin 13 has a 2 MHz signal, and pin 11 has a 1 MHz signal. Pin 15, the ripple-carry output of U11, also has 1 MHz. The U11(15) output is not a square wave. It is approximately a 100-nanosecond pulse that occurs every microsecond. During the one clock period that U11(15) is held high, pins U14(10 and 7) are enabled, and U14 is clocked one time. Then the ripple-carry output of U11 goes low again disabling U14. Later clock pulses do not change U14 until the ripple-carry output of U11 once again goes high ten cycles later. This occurs all the way up the chain to U8, which has the most significant bits, and U8(11) is actually pulsing at a 1 Hz rate. The signal from U8(11) is used to generate the non-delayed 1 PPS. This signal is not used in A5; it is used only for factory testing.

TIME DELAY Switches and Dividers Operation

The A5A3 Digital Divider has seven thumbwheel switches that allow the delay to be set in 100-second steps. When all thumbwheels are set to zero, the delay between the reference pulse and the delayed pulse is 100 nanoseconds plus or minus 100 nanoseconds. An example of how this circuit works is demonstrated by looking at switch S1 which is compared to the outputs of U11. If S1(10) is low and S1(11) high, pin 7 low, and pin 2 high, then when U11(14) goes high while S1(10) is low, these two outputs have different states and the output U7(3) goes high (U7 is an exclusive OR gate). In the same way, if all of the outputs of U8-U14 were opposite to what they are being compared to, then all outputs of the exclusive OR gates would go high simultaneously. That is, if U11(14) were in the complementary state of S1(11), and that condition was the same all the way through this set of exclusive OR gates (U1-U7), there would not be any open collector outputs that are pulled low and so a pulse would be sent to U18B. This happens once every second when the output state of U8-U14 is exactly the opposite in the absolute sense of the switch settings. This generates the delay that the operator desires.

A5A4 Interconnect

The A5A4 Interconnect Board provides electrical connections between the A5A1, A5A2, and A5A3 subassemblies of the A5 Digital Divider. There are no active circuits on A5A4.

A5 DIGITAL DIVIDER MAINTENANCE

The A5 Digital Divider provides one pulse-per-second output signals at the HP 5065A front panel, and to the front-panel digital clock. A 1 MHz signal from the A4 100 kHz Frequency Divider is the input signal to A5.

A5 Preparation for Troubleshooting and Adjustments

The A5 Digital Divider can be removed from the chassis for servicing. The extender board supplied with the HP 5065A (HP Part Number 05061-6073) can make circuit parts accessible for testing. Use the following procedure to remove A5 from the chassis for troubleshooting and adjustment:

NOTE

A5 can be removed from the chassis with the power still applied to the HP 5065A. Be careful of the high-voltage terminals inside the 5065A cabinet. Extender board (HP Part Number 05061-6073 in accessory kit) makes A5 components accessible.

a. Remove the cabinet top and bottom covers.

b. Disconnect the three coaxial connectors (J1, J2, and J3) from the A5 module at the bottom of the chassis. Disconnect the four single wires (B, R, W, and R) from the A5 module at the bottom of the chassis.

c. Remove the screws that hold the A5 module in the chassis, and carefully remove the A5 from the chassis.

d. Remove the screws that hold the A5 module shield cover, and remove the cover.

e. Reconnect cables and wires to supply power signal connections to A5.

f. Keep the A5 assembly in a position such that no electrical connections are short-circuited.

g. After repairs and adjustments are complete, replace the A5 Divider in its normal position in the 5065A chassis.

A5 Adjustments (Tuning)

Use the following procedure to check and adjust the A5 Divider after repair or replacement with a new unit:

a. With the A5 Divider out of the chassis and set up for maintenance, connect the vertical input of an oscilloscope to the junction of A5A1L1 and A5A1Q3. The oscilloscope display should be a 10-MHz sine wave signal with ten cycles that decay from about 3 to 4 Volts peak-to-peak to some small amplitude, and then the decaying waveform repeats continuously.

b. Adjust L1 with a nonmetallic tool for maximum signal on the oscilloscope.

c. Connect the oscilloscope to the junction of A5A1L3 and A5A1Q5. The oscilloscope display should be a 10-MHz sine wave signal at about 5 to 6 Volts peak-to-peak.

d. Adjust L3 with a nonmetallic tool for a maximum signal on the oscilloscope. Then adjust L1 again for maximum signal at L3-Q5 junction.

SERIAL PREFIX OR SERIES NUMBER	CHANGES

Page 8-33, Figure 8-13. A5 Digital Divider Assembly (Option 001)(Sheet 1):

All Serials
>Change label at A5A1J1, left side of diagram to, "1MHz FROM FREQ DIV A4(2)".
>Change label at A5A1J2 to "CLOCK DRIVE TO A16".
>Change pin numbers 4 and 6 for A5A5XA3 and A5A4XA4; pin 6 should be "4" and pin 4 should be "6" on both sockets.

REFERENCE DESIGNATIONS table:
>Change S1-3 to S2, under A5.
>Change C1,2 and R1-3 to C1 and R1-4 (respectively) under A5A4.

2144A
>Change A5 SERIES to 2144.
>Change A5A3 from 05061-6013 to 05061-6167, SERIES 2144.

2208A
>Change A5 SERIES to 2208.

Page 8-35, Figure 8-14. A5A2 Master Clock Board (Option 001) (Sheet 2 of 3):

All Serials
>Change Reference Designator for resistor R48 to R42.
>Change Reference Designator for resistor R42 to R43.
>Change A5A2IC1, IC2, and IC3 part numbers to 1820-0580.

2144A
>Change A5A2 SERIES to 2144.

2208A
>Change A5A2 SERIES to 2208.

2308A
>Replace A5A2 schematic, component locator, and tables with new page 8-35 (SERIES 2308) supplied in this manual change.

Page 8-37, Figure 8-15. A5A3 Preset Clock Board (Option 001) (Sheet 3 of 3):

All Serials
>Change label at A5A3 pin 6 by deleting "OUTPUT, TICK, BLOCKING & OSCILLATOR".
>Change "A5A1(3)" at label for A5A3 pin 7 to A5A1(8).
>Change A5A3IC13, IC15, and IC16 part numbers to 1820-0580.
>Change the value of A5A2 L1 and L3 to 51 microhenries.

2144A
>Replace A5A3 (05061-6013) schematic, component locator, and tables with new A5A3 (05061-6167, SERIES 2144) schematic, component locator and tables supplied in this manual change.

2208A
>Change A5A3 SERIES to 2208.

2308A
>Replace A5A3 schematic, component locator, and tables with new page 8-37 (SERIES 2308) supplied in this manual change.

SERIAL PREFIX OR SERIAL NUMBER	CHANGES

Page 8-41, Figure 8-16. A6 1 MHz Frequency Divider Assembly:

All Serials — Component Locator:
>Change reference designation of capacitor in lower left corner from Q6 to C26.

Page 8-47, Figure 8-18. A8 Phase Detector Assembly:

All Serials — >Add ferrite beads E1, E2, and E3 at bases of Q8, Q9, and Q10 respectively.

2740A — >Change A8 (05065-6013) SERIES to 2740. (See A8 parts list for change.)

2816A — >Change A8 (05065-6013) SERIES to 2816. (See A8 parts list for change.)

Page 8-48. Circuit Diagrams, Theory, and Maintenance:

All Serials — >Replace all of Operational Amplifier A9 Theory with the Operational Amplifier A9 Theory in these manual changes.

A9 MAINTENANCE:
>Replace all of NORMAL OPERATION; replace paragraphs c., e., and g. of OPERATIONAL CHECK, and all of ASSEMBLY REPAIR AND REPLACEMENT paragraphs supplied in these manual changes.

Page 8-49, Figure 8-19. A9 Integrator Assy Component Locator/Schematic Diagram:

All Serials — >Change reference designation of resistor marked C24 (top left center) to R24.
>Add reference designator R5 to top left unmarked resistor shown below AMP1.
>Add reference designator R2 to resistor directly to the right of R5.
>Add reference designator R8 to resistor directly below R11.

2632A — >Replace A9 (05065-6015) component locator/schematic diagram with new A9 (05065-6108) component locator/schematic diagram supplied in these manual changes.

Page 8-50, Circuit Diagrams, Theory, and Maintenance:

2120A — Quartz Crystal Oscillator Assembly, A10 Theory:
>Replace A10 theory with the new pages 8-50/8-52 supplied in this manual change.

OPERATIONAL AMPLIFIER A9 THEORY

The A9 Assembly amplifies and integrates the output of A8 Phase Detector and provides a dc error signal for controlling the quartz oscillator in A10 Assembly. The front-panel FUNCTION switch provides a means of opening the control loop by shorting the A9 output to its input and placing a large resistance in series with the output.

DC error signals from A8 Phase Detector connect through pin 14 to the input amplifier U3. U3 is a high-impedance, low-noise, precision FET input operation amplifier. It has extremely low input bias current and low input offset voltage. The integrating function is provided by C5 with the integrating time constant being set by the combination of C5 and R5. Initial integrator drift is minimized by zeroing the input offset voltage of U3 using potentiometer R8.

U3 output connects to the A14 Logic Assembly as one logic input and to the CONTROL position of the front-panel CIRCUIT CHECK switch. The front-panel FUNCTION switch does two things:

a. In the OPER position, the output of U3 feeds through R3 to the A10 Quartz Oscillator Assembly and through R1 to the rear-panel CONTROL jack.

b. In the LOOP OPEN position, the output of U3 connects back to the input, disabling the integrator. Additionally, a 100K resistor is placed in series with the U3 output and the A10 Quartz Oscillator Assembly input. This resistance helps isolate the A10 assembly from the A8 Phase Detector Assembly.

A9 MAINTENANCE

NORMAL OPERATION

The integrating amplifier uses the error signal from the phase detector as an input and provides the control voltage for the A10 Quartz Oscillator Assembly. The output voltage swing is limited to ±12 Vdc.

OPERATIONAL CHECK

a. Remove A8 circuit board from its socket.

b. Short pins 14 and 15 of A9 Assembly and connect a dc voltmeter to rear-panel CONTROL jack.

c. Set FUNCTION switch to LOOP OPEN and then to OPER. Measure voltage on dc meter. This voltage may be drifting, caused by the integrator circuit integrating the operational amplifier's offset voltage. If voltage drift exceeds 20 mV/minute, A9R8 should be adjusted for minimum drift.

d. Remove short from pins 14 and 15. Set FUNCTION switch to LOOP OPEN and connect circuit as shown:

A9 Test Setup

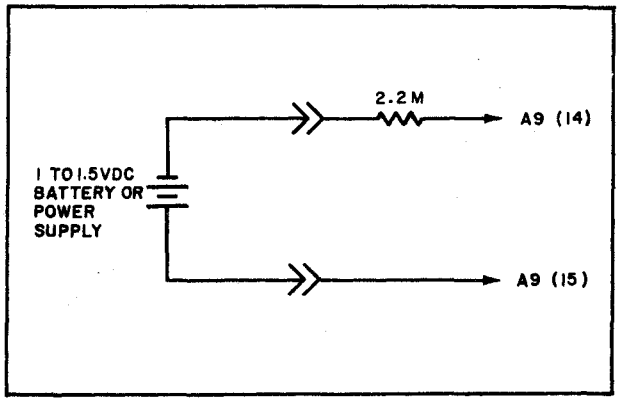

e. Set dc voltmeter to 30V range. Observing dc voltmeter set HP 5065A's FUNCTION switch to OPER. The voltage will increase at the rate of about 1V/second to about -12V.

f. Set FUNCTION switch to LOOP OPEN. The voltage will go to ZERO. Now reverse the battery or power supply connections so that the negative terminal is connected to the 2.2 megohm resistor.

g. Set voltmeter to read positive voltages. Set FUNCTION switch to OPER and observe voltmeter reading. Reading should increase at a rate of about 1V per second to a final reading of approximately +12V.

h. Remove connection to A9, pins 14 and 15. Remove dc voltmeter. Reinstall A8 Circuit board. This completes the check.

ASSEMBLY REPAIR AND REPLACEMENT

After repair or replacement of A9 Assembly, A9R8 should be adjusted as described in OPERATIONAL CHECK; steps a, b, and c.

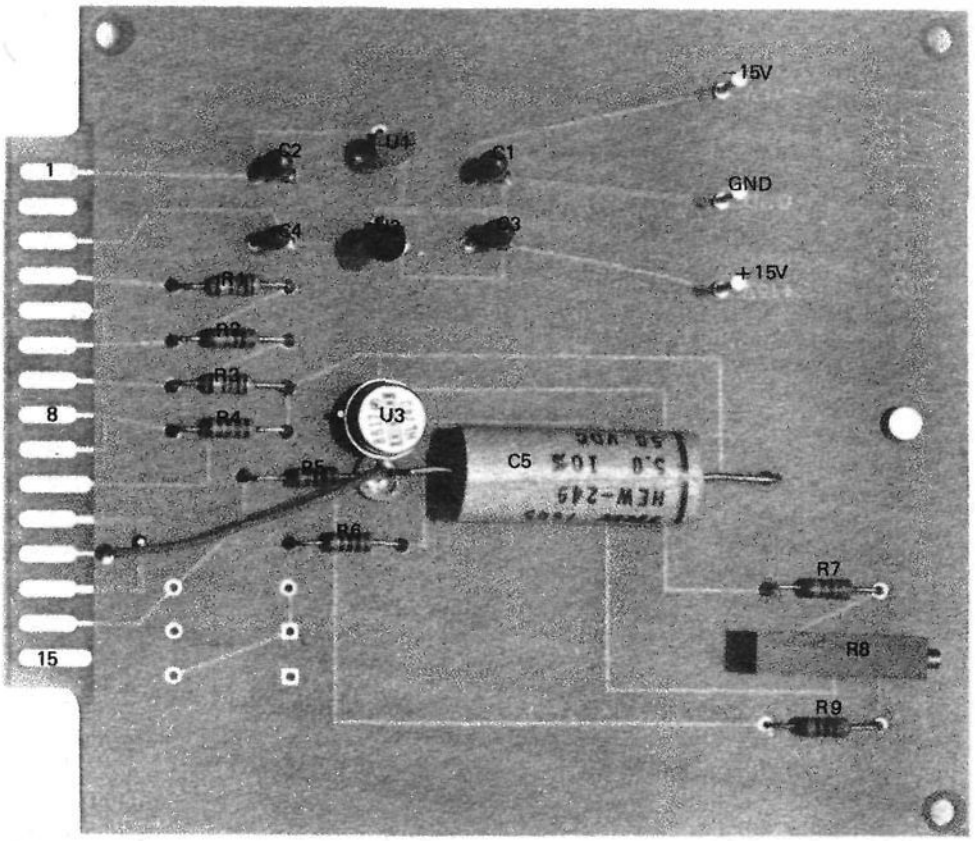

Part of Figure 8-19
A9 INTEGRATOR ASSEMBLY COMPONENT LOCATOR
(05065-6108, SERIES 2632)

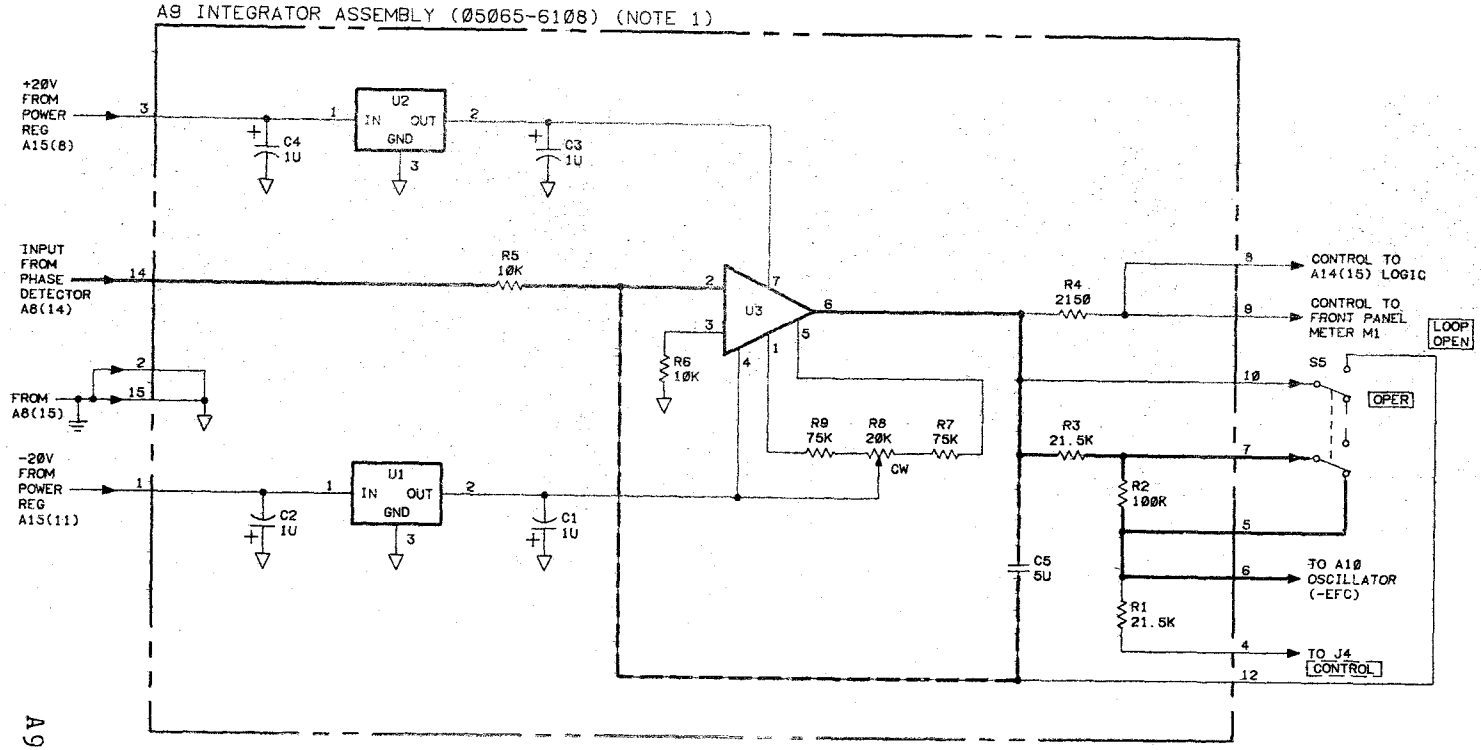

NOTES

1. REFERENCE DESIGNATIONS WITHIN THIS ASSEMBLY ARE ABBREVIATED. ADD ASSEMBLY NUMBER TO ABBREVIATION FOR COMPLETE DESCRIPTION.
2. UNLESS OTHERWISE INDICATED: RESISTANCE IN OHMS; CAPACITANCE IN FARADS; INDUCTANCE IN HENRIES.

REFERENCE DESIGNATIONS

A9 ASSY	NO PREFIX
C1-C5 R1-R9 U1-U3	S5

TABLE OF ACTIVE ELEMENTS

REFERENCE DESIGNATOR	HP PART NO.	MFG PART NO.
U1	1826-0281	MC79L15ACP
U2	1826-0274	MC78L15ACP
U3	1813-0437	OPA111BM

U3
BOTTOM VIEW

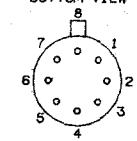

HEWLETT PACKARD	
DIRECT/DRAWING NAME	5065A_CSH/SCAB_Y1
HP PART NUMBER	05065_6108
INSTRUMENT NUMBER	5065A
DATE DRAWN	21/JUL/86
WRITER/ILLUSTRATOR	LAURA/DON
REVISION DATE	24/JUL/86
FIGURE NUMBER	
PRINTER/REDUCTION	

Figure 8-19
A9 Integrator Assembly Schematic Diagram
(05065-6108, SERIES 2632)

QUARTZ CRYSTAL OSCILLATOR ASSEMBLY A10 THEORY

GENERAL THEORY

The A10 Oscillator/Divider Assembly (HP Part No. 05065-6094) provides a stable, high-quality 5 MHz signal at an output level of at least 1 Volt rms into 50 Ohms. This assembly consists of three subassemblies:

1. A10A1 10 MHz Quartz Oscillator Assembly
2. A10A3 Power Supply Assembly
3. A10A2 Frequency Divider/Amplifier Assembly.

A10A2 Frequency Divider/Amplifier divides the 10 MHz to 5 MHz and provides the proper output levels. Electronic Frequency Control (EFC) inputs enable the oscillator frequency to be adjusted electronically as part of a servo loop, or by a potentiometer. The entire A10 assembly is designed to replace the 00105-6013 oscillator formerly used in this instrument.

The A10A1 Quartz Oscillator Assembly (HP Part Number 10811-60109) is covered by the enclosed 10811A/B Operating and Service Manual. Circuit board operation follows:

The 10 MHz output from A10A1 assembly passes through 10 MHz bandpass filter L1 and C5 on A10A3 Power Supply Assembly and then through J1 to edge-triggered D-type flip-flop (A10A2U1) that divides the 10 MHz signal by two. The 5 MHz TTL output at U1(5) passes through 5 MHz bandpass filter L7 and C12. The 5 MHz signal is amplified and filtered by emitter-coupled switch Q1, Q4, and cascade amplifier Q2.

Potentiometer A10A2R8, in the emitter circuit of Q1 and Q4, sets the level at the "5 MHz 1V" output to 1.1 Volts rms into 50 Ohms. The impedance transforming circuit consisting of C8 and L4 allows Q3 to efficiently drive a 50-ohm external load. Choke L3 provides dc to the collector of Q3, C9 blocks dc to the 5 MHz output, and L6 provides a dc return for the external load.

Resistive divider A10A2R5, R4 provides a low-level signal to "5 MHz DIV" output. Nominal voltage at this point is 70 mV rms into 1000 Ohms.

A +15 Vdc reference power supply consists of A10A2CR1, CR2, and associated parts. This supply provides a stable reference source for external circuitry connected to the + or - EFC inputs.

The A10A3 Power Supply Assembly has two inputs; "20V" and "24V". The"24V" input operates from a voltage range of +21 to 30 +Vdc from the HP 5065A. A10U1 regulates this voltage down to +18 Vdc used by oscillator A10A1 oven heater. The +18 Vdc is further regulated to +12 Vdc by A10A3U1 for use in oscillator signal circuits. A10A3CR1, Q1 and associated components regulate the +12 Vdc to +5 Vdc for use by the TTL-divider on A10A2.

Inverting amplifier A10A3Q2 is driven by the "oven monitor" circuit in A10A1 oscillator assembly. It provides an output signal to drive the OSC OVEN meter, or monitor in the HP 5065A.

Electronic frequency control (EFC) signals from the HP 5065A are summed by A10A3R9, R10, R11 and sent to the EFC input of the oscillator assembly. Factory-selected resistor A10A3R11 matches the A10A1 oscillator assembly to the parent HP 5065A. If the A10A3 Power Supply Assembly is replaced, the factory-selected resistor A10A3R11 from the defective board, or a resistor of equivalent value, must be installed in the new board. The value of A10A3R11 must equate the value as noted on the A10A1 oscillator label itself.

A10 MAINTENANCE

GENERAL

A10 Assembly consists of a factory-selected 10 MHz oscillator (HP Part Number 10811-60109) and two circuit board assemblies. A10A2 Assembly divides the A10A1 10 MHz signal by two and provides buffered 5 MHz outputs to both the A3 Multiplier and A6 Frequency Divider assemblies. All input and output connections are on A10A2. The A10A3 is the power supply for the A10A1 and A10A2 assemblies. A10A3 provides an interface between the 5065A power supplies and the circuits in assembly A10.

Input and output connections to A10 are as follows:

CONNECTOR NAME	INPUT OR OUTPUT	SIGNAL CHARACTERISTIC
+24	INPUT	+22 to +30 Vdc primarily for oven heater power (about 160 mA is normal; about 450 mA during warm-up).
+20	INPUT	+18 to +22 Vdc for oscillator and output circuits (50 mA nominal).
+EFC OR -EFC	INPUT	Voltages to control A10 output frequency.
1V	OUTPUT	5 MHz sine wave output. At least 1.0 Vrms into a 50-ohm load.
DIV	OUTPUT	5 MHz sine wave output. Nominal 50 mV to 150 mV rms into 1000-ohm load.
+15	OUTPUT	+14.0 to +15.8 Vdc for fine frequency control (OSC FREQ FINE).
M	OUTPUT	To OSC OVEN position of CIRCUIT CHECK METER via A17 Terminal Board.

OVEN OPERATION

Use the following procedure to check operation of the A10 oven:

a. Apply power to 5065A and allow at least 1 hour warm-up period. Set CIRCUIT CHECK METER to OSC OVEN.

b. Meter indication should be as indicated in *Table 3-1*. Failure of this test indicates failure of A10A1 10 MHz oscillator, or circuit of A10A3Q2.

+15V REFERENCE SUPPLY CHECK

Measure voltage at "+15" jack on A10A2. Voltage should be between +14.0 and +15.8 Volts dc.

OUTPUT AMPLITUDE AND DISTORTION CHECK

Output amplitude at the "1V" jack should be at least 1.0 Volt rms into 50 Ohms. Output harmonics of 5 MHz at the "1V" jack should be at least 30 dB below the 5 MHz output. Output at "DIV" jack should be from 50 mV to 150 mV rms.

a. Disconnect cable at "1V" jack on A10 Oscillator Assembly.

b. Use a Micon-to-BNC test cable and a 50-ohm feedthrough to connect "1V" jack to the vertical input of an oscilloscope. The displayed waveform should be a sine wave of at least 2.8 Volts p-p. This level can be adjusted with A10A2R8.

c. Remove 50-ohm feedthrough and connect signal to spectrum analyzer. Check spectrum from 5 MHz to 20 MHz. All 5 MHz harmonics should be more than 30 dB below the 5 MHz output.

d. Disconnect spectrum analyzer and reconnect 5065A cable on "1V" jack.

e. Use high impedance oscilloscope probe to measure voltage at "DIV" output on circuit side of A10A2 circuit board. Oscilloscope should indicate 140 to 420 mV p-p (50 to 150 mV rms).

SHORT TERM STABILITY CHECK

a. Allow HP 5065A to operate at least one hour. Set FUNCTION to LOOP OPEN.

b. Disconnect cable from A10 "1V" connector and connect cable to an HP 5390A Frequency Stability Analyzer (FSA).

c. Perform short-term stability test of *Table 5-2* (Performance Test, step 8). NOTE: This is a test of the oscillator assembly so the analyzer must be connected to the "1V" output on A10 rather than the 5 MHz front-panel output. All other test conditions remain the same.

The measured stability should be equal to or better than 5×10^{-12} for a one second averaging time. Failure of this test indicates a problem in A10A2 Divider Amplifier Assembly, or A10A1 oscillator. A10A1 may be checked independently.

EFC CHECK

This test checks operation of Electronic Frequency Control (EFC) input to A10.

a. Set CIRCUIT CHECK switch to 2ND HARMONIC and MODE to LOOP OPEN. Turn OSC FREQUENCY FINE control maximum counterclockwise, maximum clockwise, and then back to 250. The CIRCUIT CHECK meter should respond to control movement.

b. Disconnect cable from "-EFC" jack on A10. Connect dc power supply minus (-) lead to "-EFC" jack and power supply (+) to chassis. Slowly adjust power supply from 0 to 5V. CIRCUIT CHECK METER should respond to power supply adjust-

ment. Remove supply and reconnect cable to "-EFC" jack.

A10 REPAIR CONSIDERATIONS

If repair or adjustment of A10 is required, the assembly must be removed from the HP 5065A. Once removed, the A10 assembly can be operated independently by connecting two power supplies. Set one power supply for +22 to +30 Vdc (450 mA maximum current) and connect to the "+24" input. Set the other supply to +20 Vdc (approximately 50 mA) and connect to "+20" input. Power supply (-) terminals are connected to A10 chassis.

An alternate method is to obtain power from the HP 5065A. Using clip leads, connect the A10 chassis to the 5065A chassis. Connect the "+24" terminal on A10 to XA15(4), and the "+20" terminal to XA15(6).

With the A10 removed and operating outside the instrument, troubleshooting is relatively easy. Power supply voltages can be measured on A10A3 sockets. If power supply is defective, remove oscillator assembly A10A1 to gain access to power supply assembly A10A3. A10A3 will operate normally with A10A1 removed.

IF A10A1 IS FOUND TO BE DEFECTIVE, THE ENTIRE A10 ASSEMBLY (05065-6094) MUST BE REPLACED. THE A10A1 10 MHZ OSCILLATOR IS NOT FIELD REPAIRABLE.

The A10A2 (Frequency Divider/Amplifier Board Assembly) and A10A3 (Power Supply Board Assembly) are both repairable to the component level. If the A10A3 is replaced, the factory-selected resistor A10A3R11 from the defective board, or a resistor of equivalent value, must be installed in the new board. The value of A10A3R11 must reflect the value as noted on the A10A1 oscillator itself.

ADJUSTMENTS

There are four adjustments in the A10 assembly: A10A1 output amplitude, frequency, EFC gain, and A10 output level. Assembly A10A1 output amplitude adjustment is covered in the 10811A/B Operating and Service Manual. Frequency adjustment is covered as part of the 5065A operating procedure. A10 output amplitude and EFC gain adjustments are covered below.

OUTPUT AMPLITUDE ADJUSTMENT

a. With A10 operating outside the 5065A as previously described, connect A10 "1V" output through a 50-ohm feedthrough to an oscilloscope vertical input.

b. Adjust A10A3R8 for an oscilloscope display of 3.1 Volts p-p (1.1 Volts rms).

c. Remove connections to A10 and replace in HP 5065A.

A10 ASSEMBLY REPLACEMENT

The HP 5065A does not require internal adjustments following replacement of oscillator assembly A10. After installation is completed, follow the turn-on procedure in *Figure 3-2* of the Operating and Service Manual.

SERIAL PREFIX OR SERIES NUMBER	CHANGES

Page 8-53, Figure 8-20. A10 Oscillator Assembly Block Diagram:

2120A	>Replace A10 block diagram with A10 schematic diagram supplied in these manual changes.
2142A	>Change A10 (05065-6094) SERIES to 2134. >Change A10, A10A3 component locator SERIES to 2134. >Change A10A3R12, R13 value to 464 ohms.
2432A	>Change A10A2 p/n from 05061-6165 to 05061-6174, SERIES 2432. >Change A10A2R11 value to 147K. >Replace A10A2 (05061-6165) component locator with new A10A2 (05061-6174) component locator, SERIES 2432 supplied in these manual changes.
2644A01507 and above	>Replace A10A2 (05061-6174) schematic diagram with new A10A2 schematic diagram (05061-6199, SERIES 2736A. >Change A10A2R1 value from 464 ohms to 383 ohms.

Page 8-55, Figure 8-21. A11 RVFR Temperature Controller Assembly:

All Serials	>Replace A11 component locator with new A11 component locator supplied in these manual changes.

Page 8-63, Figure 8-23. A14 Logic Assembly:

All Serials	>Change the value of R12 (20K) to 1000 ohms. >Add R15 (20K) between circuit board common and junction of CR2 and R16.

Page 8-64. Circuit Diagrams, Theory, and Maintenance:

2144A	Power Supply and Regulator Circuit A15 Theory: >Add the following to paragraph a: "Starting with the A15 (Part No. 05065-610, SERIES 2144) the bridge rectifier diodes on A15 are replaced by chassis-mounted bridge rectifier CR4."

Page 8-65, Figure 8-24. A15 Power Supply and Regulator Assembly:

All Serials	>Change part number of Q7 from 1853-0006 to 1853-0012. >Add reference designation (C12) to disc capacitor loaded directly below resistor R14, in A15 component locator.
2144A	>Change A15 p/n from 05065-6023 to 05065-6100, SERIES 2144. >Delete all connections to A15 terminals 12, 13, 14, and 15. >Delete C1 and diodes CR1-CR4 in component locator and schematic diagram. >Add a connection by a wht-brn-yel wire (CR4 +) to the junction of C7 and L1 and mark the wire "+24V-32V FROM

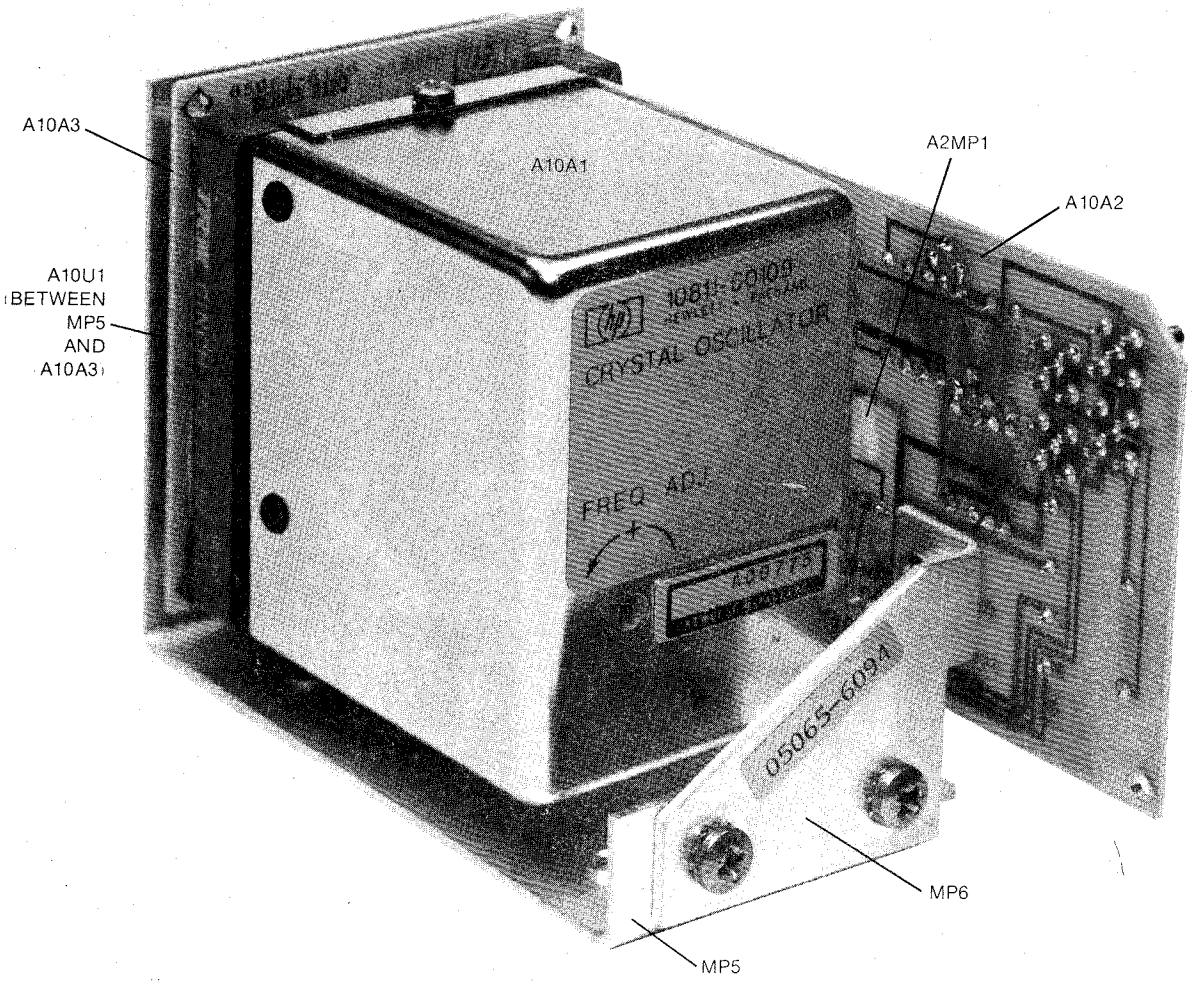

A10 OSCILLATOR ASSEMBLY (05065-6094 SERIES 2120)

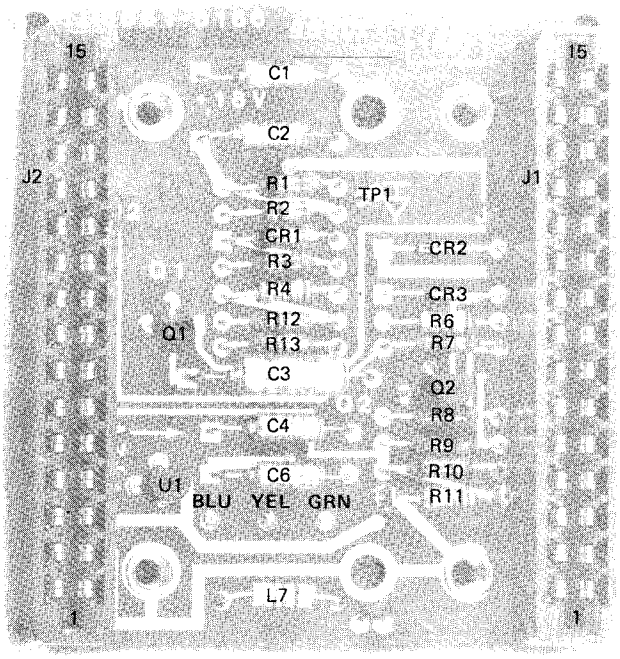

A10A3 POWER SUPPLY ASSEMBLY (05061-6166 SERIES 2120)

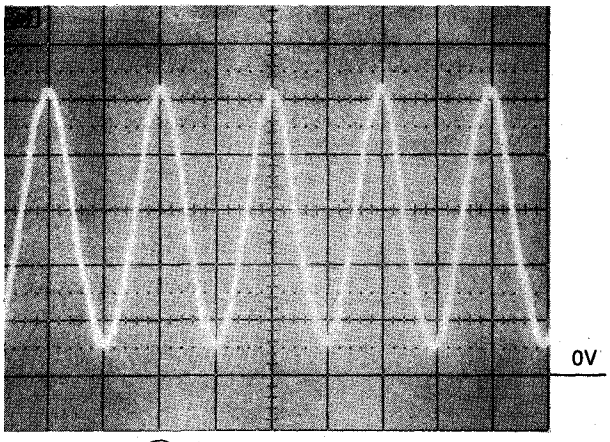

(1) **Vert** = .5V/div.
Horiz = 50 ns/div.

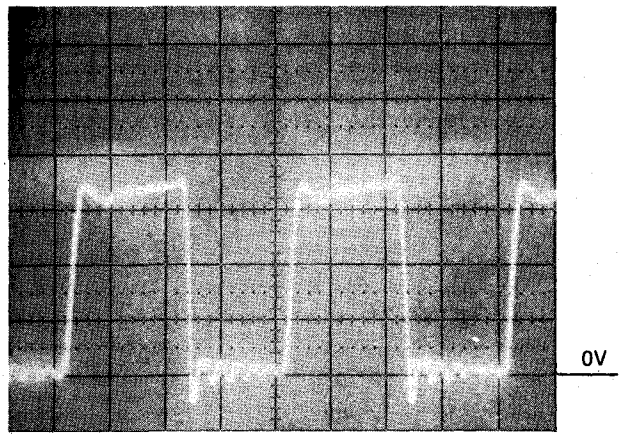

(2) **Vert** = 1V/div.
Horiz = 50 ns/div.

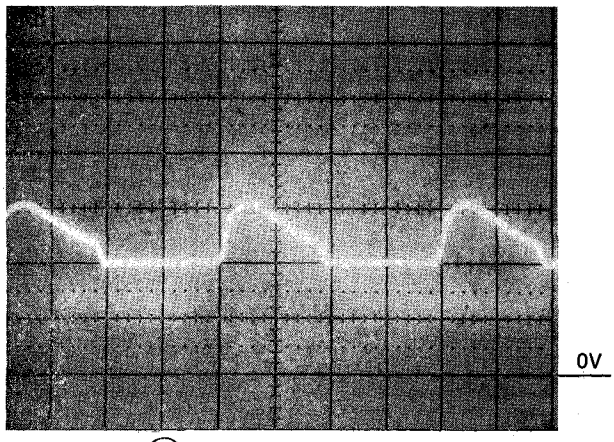

(3) **Vert** = 2V/div.
Horiz = 50 ns/div.

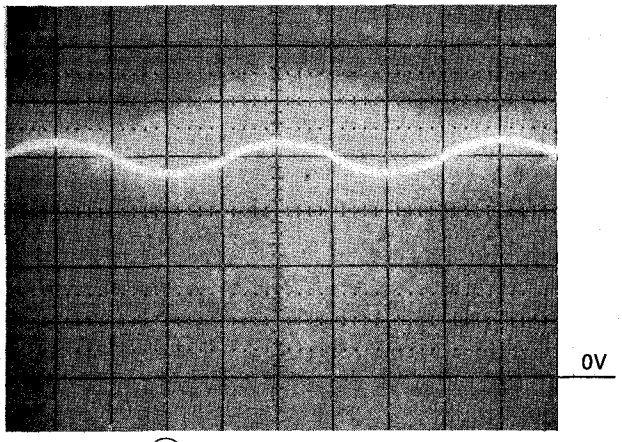

(4) **Vert** = 5V/div.
Horiz = 50 ns/div.

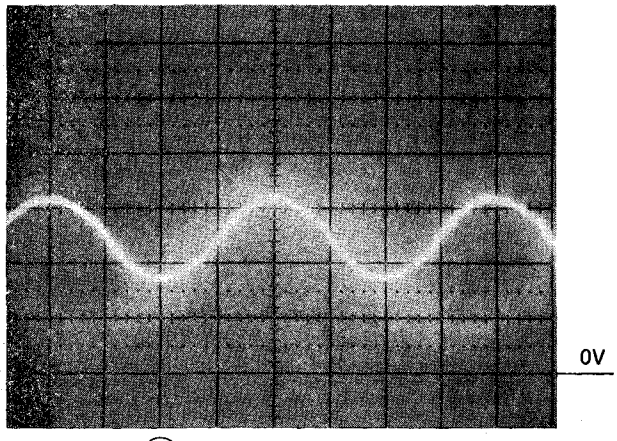

(5) **Vert** = 2V/div.
Horiz = 50 ns/div.

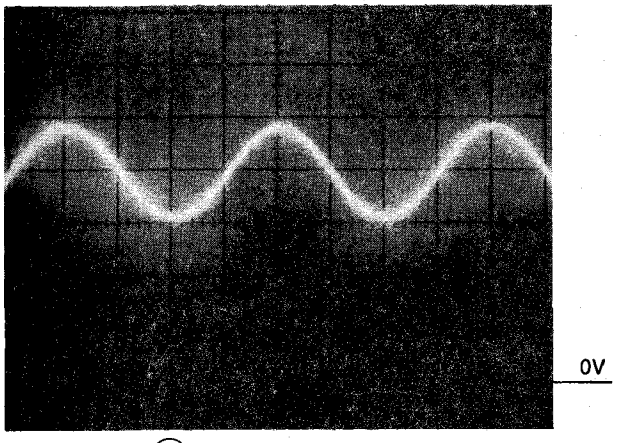

(6) **Vert** = 5V/div.
Horiz = 50 ns/div.

WAVEFORMS FOR A10A2 FREQUENCY DIVIDER/AMPLIFIER ASSEMBLY
(05061-6165 SERIES 2120)

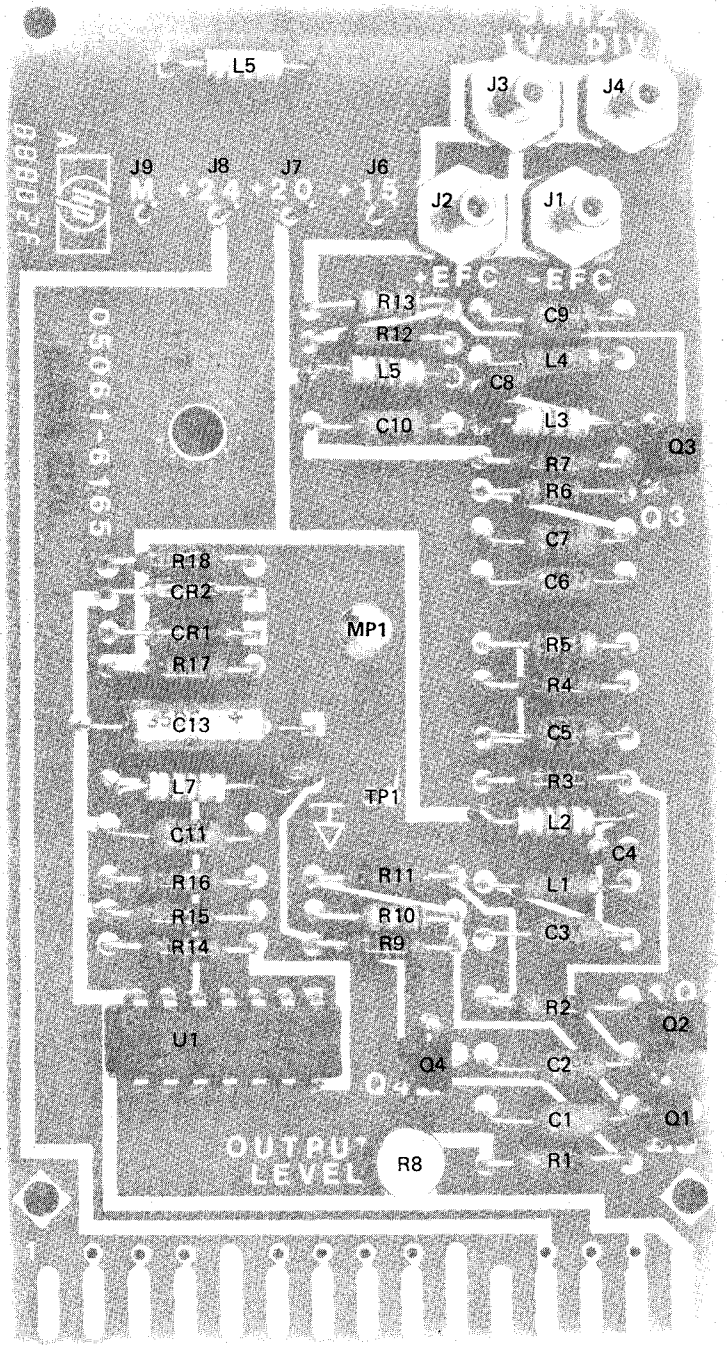

A10A2 FREQUENCY DIVIDER/AMPLIFIER ASSEMBLY
(05061-6165 SERIES 2120)

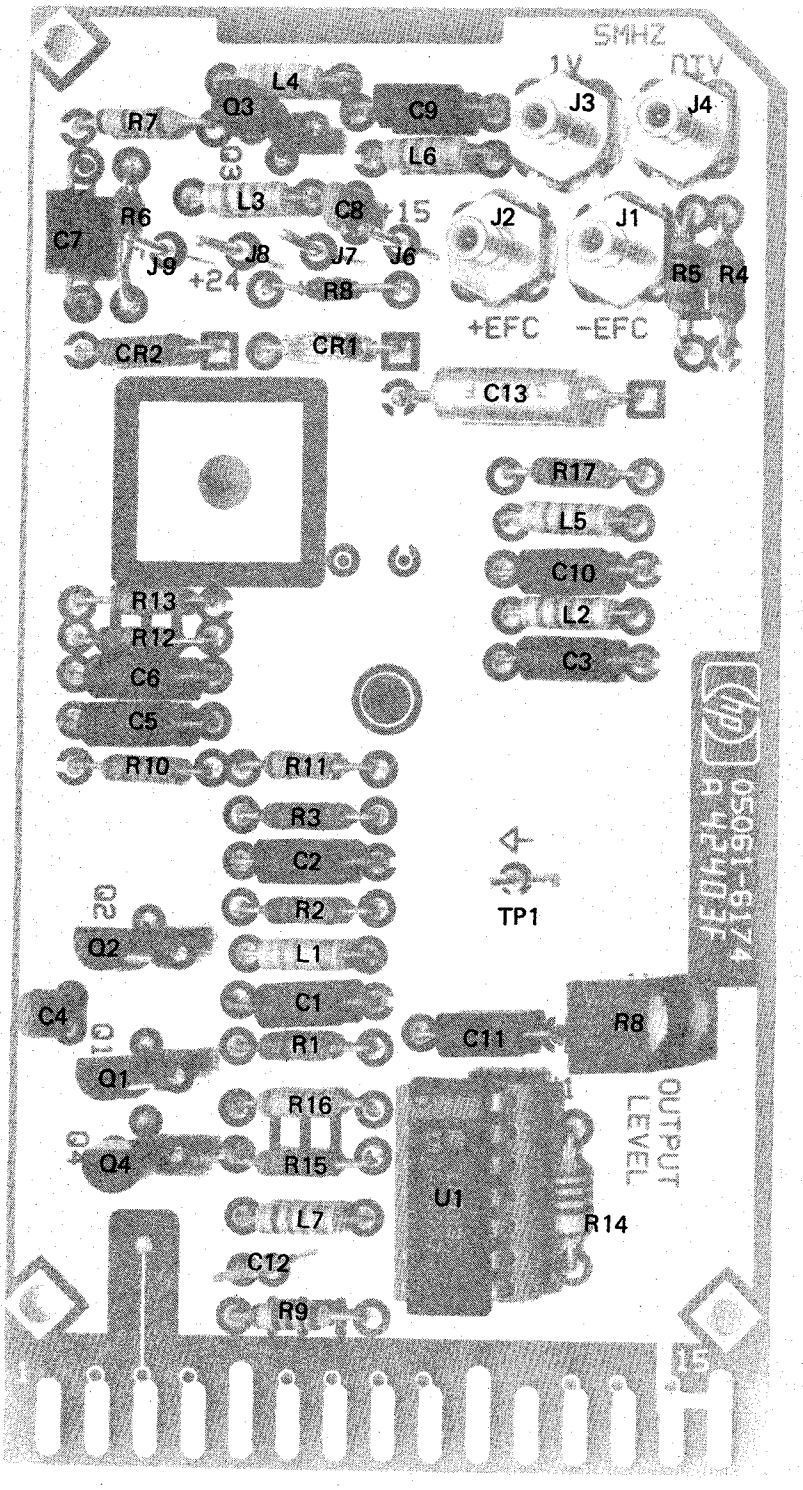

A10A2 Frequency Divider/Amplifier Assembly
Component Locator
(05061-6174 SERIES 2432)

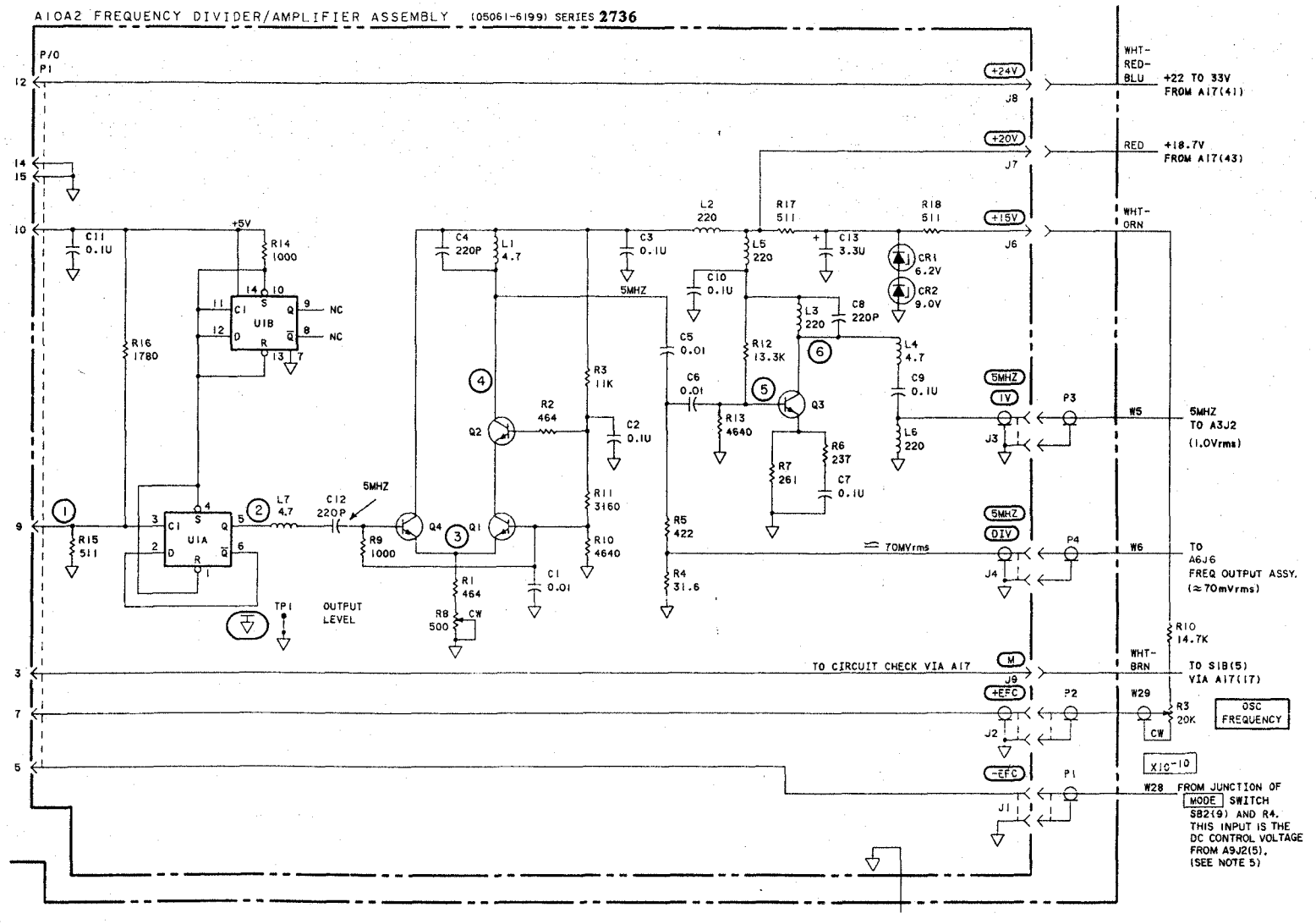

NOTES:

1. REFERENCE DESIGNATIONS WITHIN THIS ASSEMBLY ARE ABBREVIATED, ADD ASSEMBLY NUMBER TO ABBREVIATION FOR COMPLETE DESCRIPTION.
2. UNLESS OTHERWISE INDICATED: RESISTANCE IN OHMS; CAPACITANCE IN FARADS; INDUCTANCE IN MICROHENRIES.
3. * INDICATES FACTORY SELECTED VALUE.
4. CHASSIS CONNECTION MADE BY A10A2 MOUNTING SCREW.
5. DC CONTROL VOLTAGE CAN RANGE BETWEEN −5Vdc AND +5Vdc, DEPENDING ON THE FREQUENCY DIFFERENCE BETWEEN THE CESIUM RESONANCE AND THE APPLIED MICROWAVE SIGNAL SYNTHESIZED FROM THE A10A1 10MHz OUTPUT. "ALARM" LED IS SET TO TURN ON AT >+4.5Vdc (NOMINAL) AND < −4.5Vdc (NOMINAL).

REFERENCE DESIGNATIONS

NO PREFIX	A10A1	A10A2	A10A3
		C1-13	C1-7
		CR1,2	CR1-3
		J1-4,6-9	J1,2
		L1-7	L1
		Q1-4	Q1,2
R10		R1-18	R1-4,6-13
		TP1	TP1
		U1	U1

NOT ASSIGNED: A10A2J5, A10A3R5

TABLE OF ACTIVE ELEMENTS

CIRCUIT REF.	HP AND MFR PART NO.
A10U1	1826-0390 (LM317T)
A10A2CR1	1902-0033 (1N823)
A10A2CR2	1902-0787 (1N938)
A10A2Q1-Q4	1854-0215 (2N3904)
A10A2U1	1820-0077 (SN7474N)
A10A3CR1	1902-0984
A10A3CR2,CR3	1901-0050
A10A3Q1	1854-0831 (2N6429A)
A10A3Q2	1854-0215 (2N3904)

NOTE--ALL TRANSISTORS ARE NPN SILICON

Part of Figure 8-20
A10A2 Frequency Divider/Amplifier Assembly
Schematic Diagram
(05061-6199, SERIES 2736)

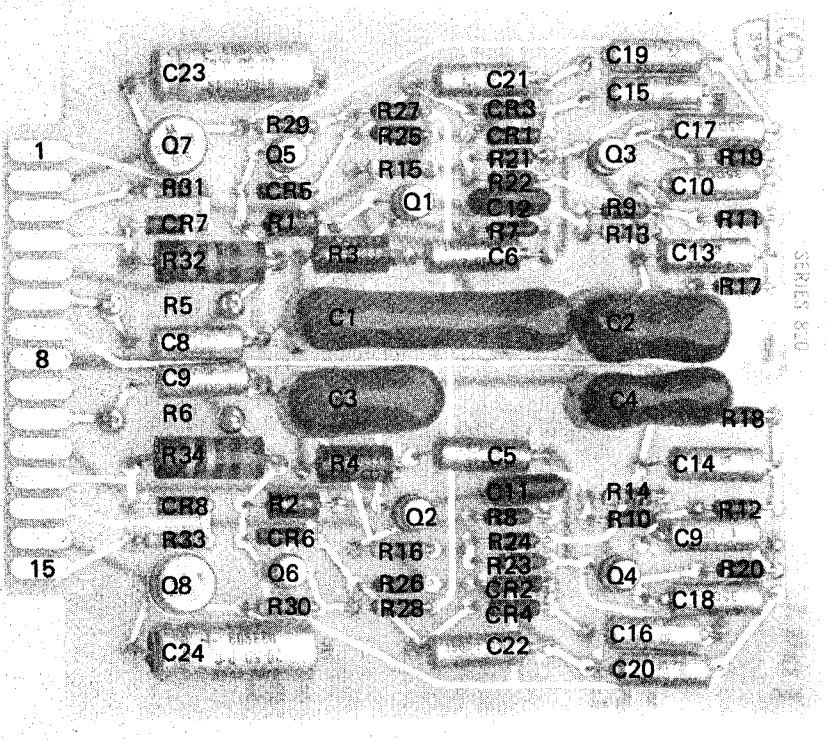

Part of Figure 8-21. A11 RVFR Temperature Controller Assembly
(05065-6024, SERIES 1840)

SERIAL PREFIX OR SERIES NUMBER	CHANGES

Page 8-66. Circuit Diagrams, Theory, and Maintenance:

All Serials

DIGITAL DIVIDER POWER SUPPLY A16 THEORY

>Change first line to read, "The A16 module has two basic circuits".

>Delete paragraph "c".

>Change second sentence in first paragraph at top of column to: "In T2 output, CR10 provides isolation."

>Replace second paragraph in column two with the following: "The 1 PPS pulses from A5 Digital Divider output connector (J1) are input as MASTER 1 PPS pulses at terminal W on Clock Display Assembly A19."

>Delete third paragraph under "A16 MAINTENANCE".

Page 8-67, Figure 8-25. Figure 8-25. A16 Digital Divider Power Supply Assembly:

All Serials

>Change reference designation of diode CR13 to CR12, located between R19 and R20 (upper left corner).

>Change reference designation of diode directly to the left of R10 (top center) from R15 to CR10.

>Add resistor R15 betweeen the two terminal posts just above R17.

Reference Designator Table

>Change CR1-15 to CR1-12,15.

>Change Q1-12 to Q1-10.

>Change R1-26 to R1-20.

2148A

>Change A16,A16A1 SERIES to 2148.

>Add to NOTES:

4. Transistor 1854-0916 is a preferred part. A16 and A16A1 SERIES 2148, which use the 1854-0916 transistor for Q9, Q10, are directly interchangeable with prior series. These assemblies are used in Opt 001 and 003 only. Option series changes do not affect the serial prefix in this instrument.

Table of Active Components

>Change Q9, Q10 to 1854-0916.

SERIAL PREFIX OR SERIES NUMBER	CHANGES

Page 8-71, Figure 8-26. A19 Clock Display Assembly:

All Serials	>Change part numbers at top of A19A2 schematic to (05061-6125 for OPTION 001) and (05061-6136 for OPTION 003). >Delete connection between collector of A19A1Q3 and A19A1U2 pins 11 and 14. >Connect A19A1U2 pins 11 and 14 to board common.